Industrial Internship Report on

"IoT-Enabled Smart Energy Monitoring and Protection System"

Prepared by

Bhukya Venu

Executive Summary
This report provides details of the Industrial Internship provided by upskill Campus and The IoT Academy in collaboration with Industrial Partner UniConverge Technologies Pvt Ltd (UCT). This internship was focused on a project provided by UCT, which was to be finished including the report in 6 weeks' time. My project was the IoT-Enabled Smart Energy Monitoring and Protection System. The objective was to design, simulate, and validate an automated "Smart Circuit Breaker" and Energy Monitoring System utilizing an ATmega328P microcontroller. This internship gave me a very good opportunity to get exposure to Industrial problems and design/implement solutions for them, making it an overall great experience.

---

1 Preface

This report summarizes the work completed for the Smart Monitoring System project. The project focuses on acquiring real-time electrical parameters—specifically DC Voltage, Current, and Power—from a connected load. By continuously analyzing these parameters against predefined safety thresholds, the system autonomously isolates the load using an electromechanical relay if a fault condition is detected.

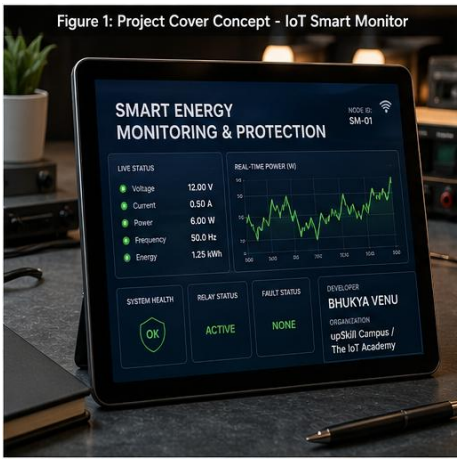

Figure 1: Project Cover Concept - IoT Smart Monitor

2 Introduction

2.1 About UniConverge Technologies Pvt Ltd

Established in 2013, UCT works in the Digital Transformation domain, providing Industrial solutions focusing on sustainability and RoI. For developing its products and solutions, it leverages cutting-edge technologies such as IoT, Cyber Security, Cloud computing, and Machine Learning. UCT Insight is their IoT platform designed for quick deployment, built using Java and ReactJS, and supporting various databases and IoT protocols. Factory watch is their smart factory platform providing scalable solutions for production and asset monitoring, including OEE and predictive maintenance.

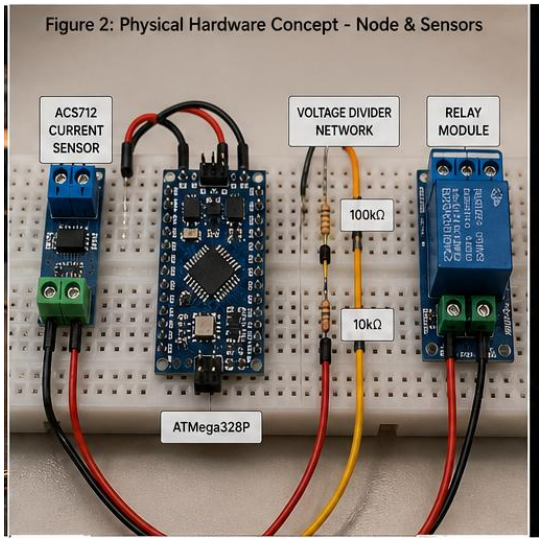

2.2 About upskill Campus

upskill Campus (USC), along with The IoT Academy and in association with UCT, facilitated the smooth execution of this internship. USC is a career development platform delivering personalized executive coaching and upskilling in a self-paced manner. The IoT Academy is the EdTech Division of UCT that runs executive certification programs in multiple domains.

2.3 Objective

The primary objective of this project is the design, simulation, and validation of an automated "Smart Circuit Breaker" and Energy Monitoring System.

2.4 Reference

- [1] Proteus Professional Simulation Software
- [2] Arduino Uno (ATmega328P) Specifications
- [3] ACS712 Hall-effect sensor Datasheet

2.5 Glossary

Term/Acronym	Description
ADC	Analog-to-Digital Converter
LCD	Liquid Crystal Display (LM016L 16x2)
SPDT	Single Pole Double Throw (Relay Module)
V	Voltage
I	Current
P	Power

Figure 3: Conceptual Web Dashboard UI

3 Problem Statement

The assigned problem statement involves engineering a system to acquire real-time electrical parameters (DC Voltage, Current, and Power) from a connected load. The system must continuously analyze these parameters and autonomously trigger an electromechanical relay to isolate the load if a fault condition is detected, such as an over-power load or an under-voltage battery, thereby preventing hardware damage.

4 Existing and Proposed solution

Proposed Solution: The proposed system architecture relies on an ATmega328P microcontroller (Arduino Uno) as the core processing unit. It acquires voltage readings using a 100kΩ and 10kΩ voltage divider network, and current readings using an ACS712 (5A) Hall-effect sensor. An LM016L 16x2 Character LCD provides real-time, on-device telemetry, while a Virtual Terminal provides a continuous serial data stream for diagnostics. A 5V SPDT relay module serves as the physical isolation switch.

- **Code submission (Github link):** https://github.com/venurathod02/upskillcampus/blob/main/smartmonitoringsystem.ino
- **Report submission (Github link):**

  https://github.com/venurathod02/upskillcampus/blob/main/smartenergysystem_venu_USC_UCT

5 Proposed Design/ Model

The system architecture is divided into three primary sub-systems: Sensing, Processing, and Actuation/Display.

- **Sensing Sub-System:** A voltage divider network scales the 12V DC source down by a factor of 11 to safely constrain measurements within the Arduino's 0-5V ADC limit. An ACS712 sensor wired in series with the load outputs a quiescent voltage of 2.5V at zero current, featuring a calibrated sensitivity of 185mV/A.
- **Actuation and Display Sub-System:** The relay module enforces an active-high logic state to maintain load connection, while the LCD and Virtual Terminal output human-readable data. The microcontroller utilizes a C++ firmware codebase to

handle ADC conversions, mathematical scaling, LCD driving, and safety trip logic

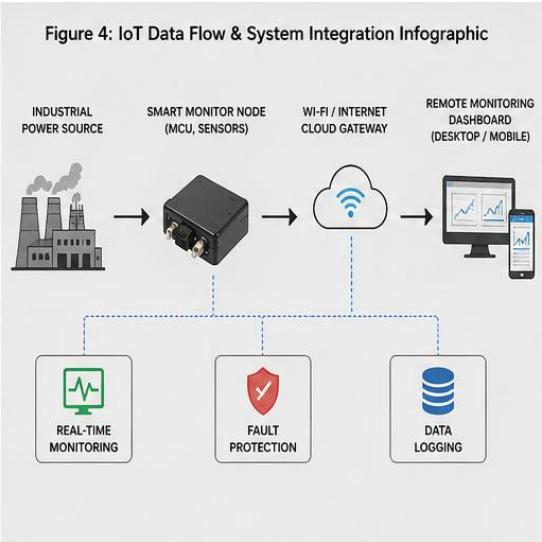

Interfaces (Master Pin Mapping Definition):

Component/Function	**Arduino Pin**	**Signal Type Description**
ACS712 Current Sensor	A0	Analog Input. Reads Hall-effect voltage shift.
Voltage Divider Network	A1	Analog Input. Reads scaled battery voltage.
Relay Control	D8	Digital Output. Drives relay coil (HIGH=ON, LOW=Trip).
LCD: Register Select (RS)	D12	Digital Output. Routes data to LCD character or command registers.
LCD: Enable (E)	D11	Digital Output. Latches data into the LCD.
LCD: Data Bus (D4-D7)	D5, D4, D3, D2	Digital Output. 4-bit parallel data transmission to LCD.

Component/Function	Arduino Pin	Signal Type Description
Virtual Terminal	D0, D1	Serial TX/RX. Transmits diagnostic strings.

---

6 Performance Test

Constraints: A primary constraint was the inherent "noise" present in analog-to-digital conversions.

Test Plan & Procedure: The integrated system underwent rigorous simulation testing using Proteus Professional to validate the operational logic. To validate the protection algorithm, the firmware safety limit was set to 1000W, and a Proteus DC Lamp was calibrated with an internal resistance of 24Ω. This setup allowed the system to draw a stable ~0.5A (6W), keeping the relay closed. During the test procedure, the load resistance was artificially manipulated to exceed these limits.

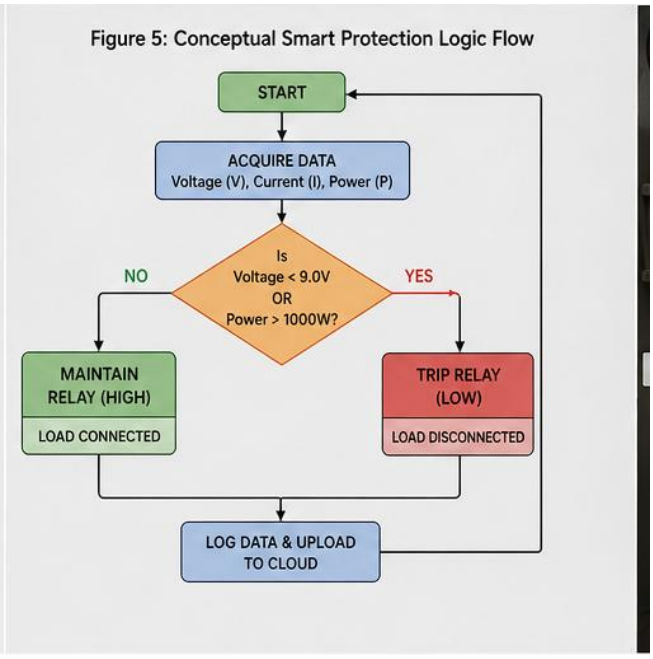

Performance Outcome: The Arduino successfully reversed the hardware voltage divider scaling in real-time utilizing Ohm's and Watt's laws ($P = V \times I$). To handle the ADC noise constraint, a software deadband filter was implemented; if the calculated current falls between -0.1A and 0.1A, it forces the variable to absolute zero, ensuring a clean 0.0W reading. Upon manipulating the load resistance past the defined

thresholds, the system successfully proved its ability to trigger the relay (LOW) and instantly cut power.

---

7 My learnings

Working on this project provided valuable practical experience in integrating analog sensor hardware with dynamic C++ software algorithms. It yielded a fully functional prototype of a Smart Energy meter and successfully demonstrated a highly stable, low-latency method for energy monitoring and circuit protection.

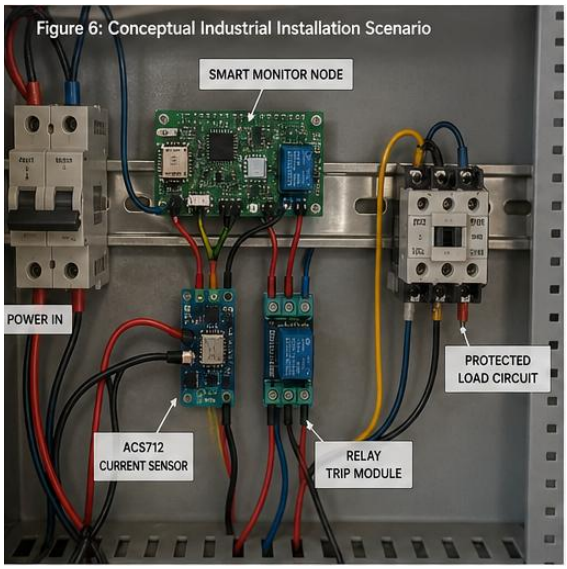

Figure 6: Conceptual Industrial Installation Scenario

8 Future work scope

The current architecture provides a highly scalable foundation for advanced IoT applications. As future work, this local processing node could be expanded with internet capabilities to transmit telemetry directly to cloud-based energy management dashboards.