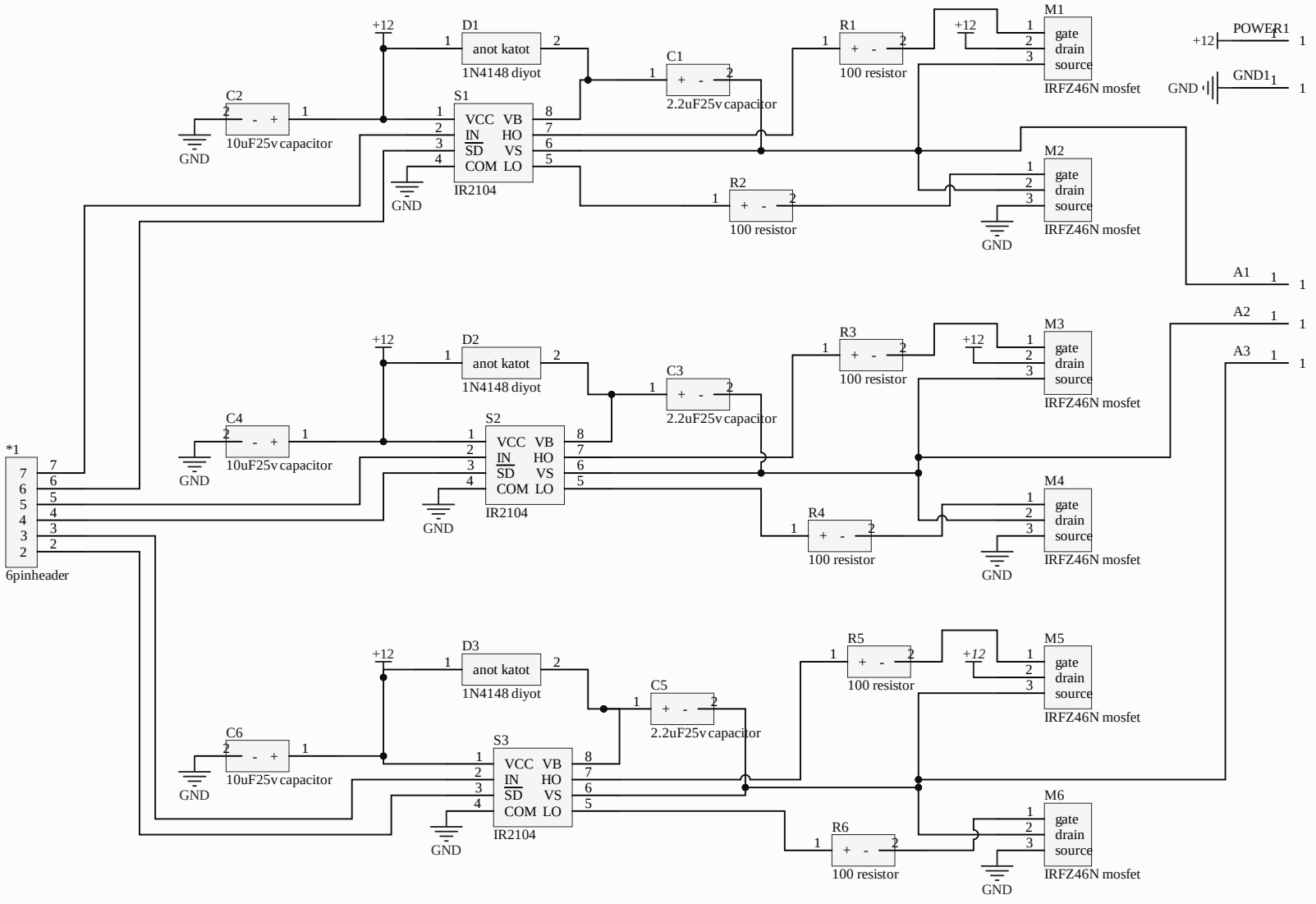

Title		
Size A4	Number	Revision
Date: 3.15.2021		Sheet of
File: D:\Belgeler\..\Sheet1.SchDoc		Drawn By: