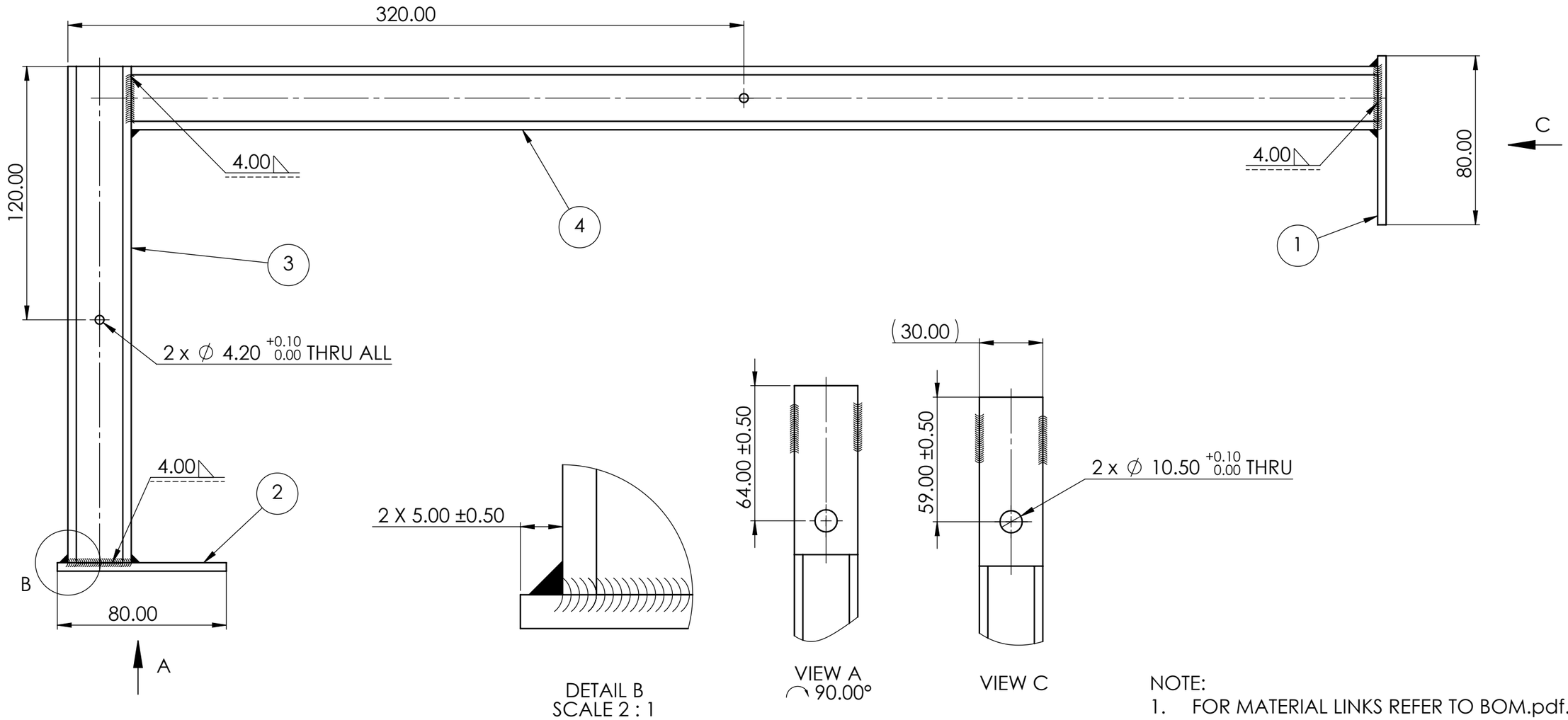

NOTE:
1. FOR MATERIAL LINKS REFER TO BOM.pdf.
2. GENERAL TOLERANCE DIN ISO 2768-vK.
3. FOR MORE DIMENSIONS SEE CAD FILE: PCShelfFrame.SLDPRT.
4. FINISH FOR ALL CONFIGURATIONS: COLOR ...

Weldment Cut List

ITEM NO.	QTY.	DESCRIPTION	LENGTH	TOTAL LENGTH
1	1	METAL BAR 30 X 4	80	160
2	1	METAL BAR 30 X 4	80	
3	1	TUBE, SQUARE 30 X 30 X 2	235	825
4	1	TUBE, SQUARE 30 X 30 X 2	590	

PROPRIETARY AND CONFIDENTIAL
THE INFORMATION CONTAINED IN THIS DRAWING IS THE SOLE PROPERTY OF VR. ANY REPRODUCTION IN PART OR AS A WHOLE WITHOUT THE WRITTEN PERMISSION OF VR IS PROHIBITED.

NEXT ASSY | USED ON
APPLICATION

UNLESS OTHERWISE SPECIFIED:
BREAK ALL SHARP EDGES
DIMENSIONS ARE IN MILLIMETERS
TOLERANCES:
FRACTIONAL ±
ANGULAR: MACH ± BEND ±
TWO PLACE DECIMAL ±
THREE PLACE DECIMAL ±
INTERPRET GEOMETRIC TOLERANCING PER:
MATERIAL AISI 304
FINISH See notes
DO NOT SCALE DRAWING

	NAME	DATE
DRAWN		
CHECKED		
ENG APPR.		
MFG APPR.		
Q.A.		

COMMENTS:
Vladimir Tyrkin
veres.pcb@gmail.com

VR
TITLE:
PC Shelf Frame

SIZE B | DWG. NO. 002 | REV
SCALE: 1:2 | WEIGHT: 1.56 | SHEET 1 OF 1