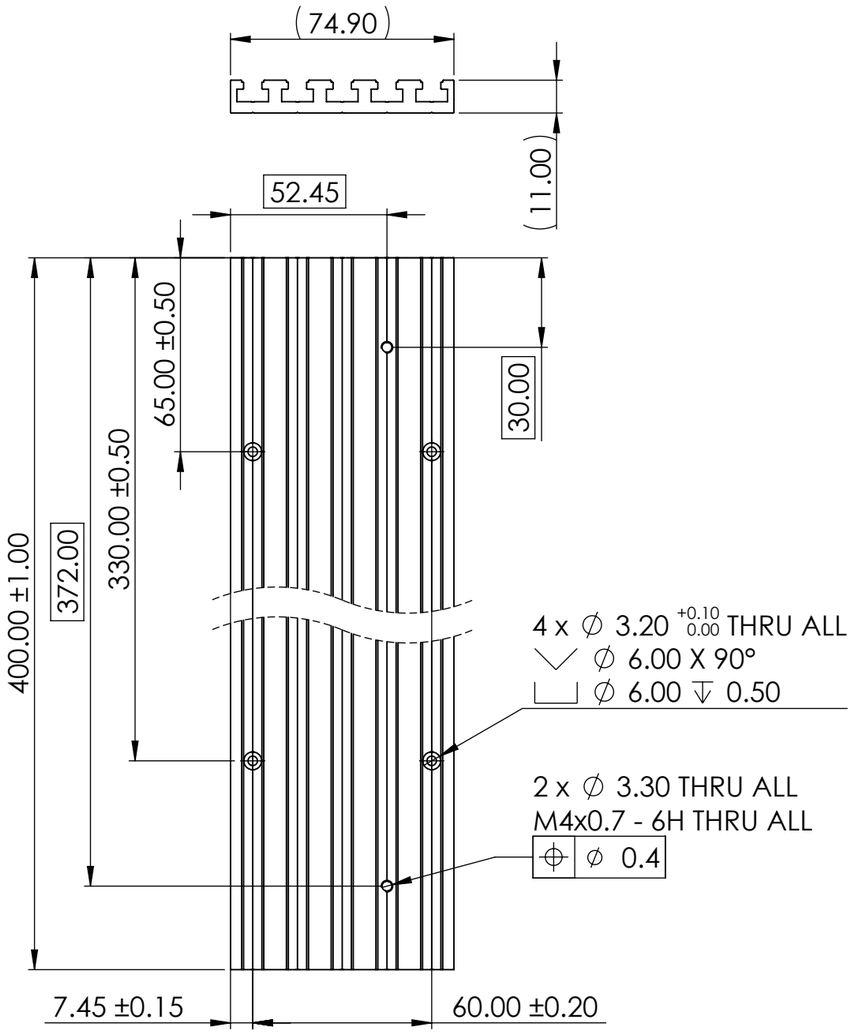

CNC.05.01-1

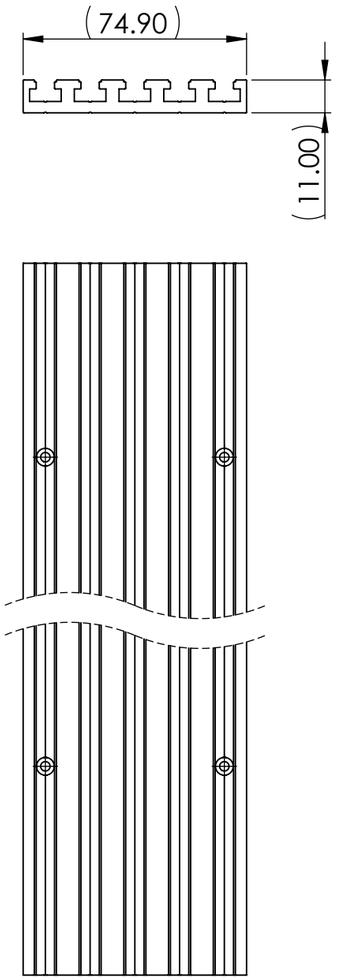

CNC.05.01-2

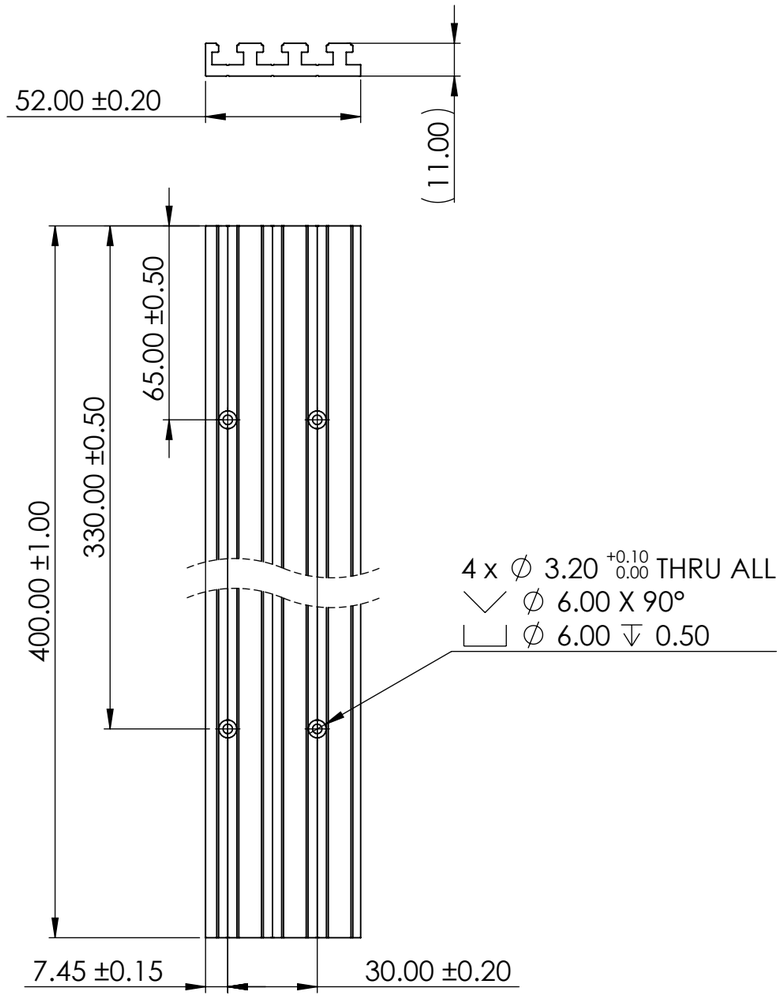

CNC.05.01-3

NOTE:
1. MATERIAL: Double Six Slot Rail, MCMASTER-CARR P/N: 5537T111.
2. BOTH CUTTED SIDES SHALL BE FREE OF SHARP EDGES AND BURRS.
3. FOR MORE DIMENSIONS SEE CAD FILE: Aluminum Extrusion Table Plate T-slot.SLDPRT.

PROPRIETARY AND CONFIDENTIAL
THE INFORMATION CONTAINED IN THIS DRAWING IS THE SOLE PROPERTY OF VR. ANY REPRODUCTION IN PART OR AS A WHOLE WITHOUT THE WRITTEN PERMISSION OF VR IS PROHIBITED.

NEXT ASSY	USED ON
APPLICATION	

UNLESS OTHERWISE SPECIFIED:
BREAK ALL SHARP EDGES
DIMENSIONS ARE IN MILLIMETERS
TOLERANCES:
FRACTIONAL ±
ANGULAR: MACH ± BEND ±
TWO PLACE DECIMAL ±
THREE PLACE DECIMAL ±

INTERPRET GEOMETRIC TOLERANCING PER:

MATERIAL
See notes

FINISH
As machined

DO NOT SCALE DRAWING

	NAME	DATE
DRAWN		
CHECKED		
ENG APPR.		
MFG APPR.		
Q.A.		

COMMENTS:
Vladimir Tyrkin
veres.pcb@gmail.com

VR

TITLE:
T-Slot Table Plate

SIZE	DWG. NO.	REV
B	CNC.05.01	

SCALE: 1:2 | WEIGHT: 201.41 | SHEET 1 OF 1