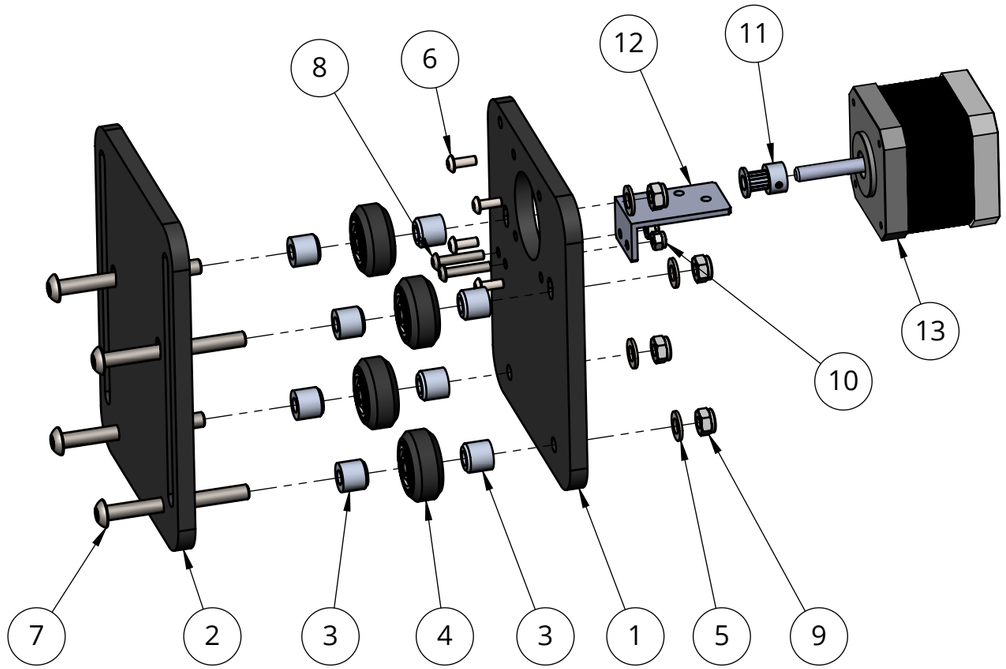

ITEM NO.	PART NUMBER	DWG. NO.	QTY.
1	Stepper Side Part	CNC.02.41	1
2	Adjustment Equipment Part	CNC.02.41	1
3	Wheel Spacer 2	CNC.02.43	8
4	Solid V-Wheel D=24 d=5	No	4
5	Washer DIN 125 - A 5.3		4
6	ISO 7380 - M3 x 8 - 8N		4
7	Head screw ISO 7380 M5 x 50	No	4
8	head screw ISO 7380 M3 x 16	No	2
9	M5 NYLOC DIN 985	No	4
10	M3 NYLOC DIN 985	No	2
11	Pulley GT2-12	No	1
12	Corner Bracket For Cable Chain	CNC.02.24	1
13	Nema 17HS4401 Stepper Motor	No	1

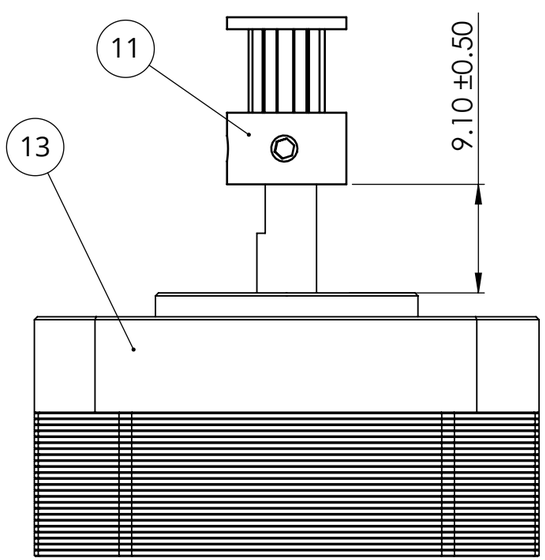

NOTES:

1. PRE-ASEEMBLE ITEM 11 AND 131313 AS SHOWN. APPLY LOCTITE OR THREAD LOCKER FOR TWO SET SCREWS PRIOR TO ASSEMBLY.
2. FOR MANUFACTURING LINKS REFER TO CNC_BOM.PDF.

PROPRIETARY AND CONFIDENTIAL

THE INFORMATION CONTAINED IN THIS DRAWING IS THE SOLE PROPERTY OF VR. ANY REPRODUCTION IN PART OR AS A WHOLE WITHOUT THE WRITTEN PERMISSION OF VR IS PROHIBITED.

NEXT ASSY | USED ON

APPLICATION

UNLESS OTHERWISE SPECIFIED:

BREAK ALL SHARP EDGES
DIMENSIONS ARE IN MILLIMETERS
TOLERANCES:
FRACTIONAL ±
ANGULAR: MACH ± BEND ±
TWO PLACE DECIMAL ±
THREE PLACE DECIMAL ±

INTERPRET GEOMETRIC TOLERANCING PER:

MATERIAL
Multimaterial

FINISH
No

DO NOT SCALE DRAWING

	NAME	DATE
DRAWN		
CHECKED		
ENG APPR.		
MFG APPR.		
Q.A.		

COMMENTS:

Vladimir Tyrkin

veres.pcb@gmail.com

VR

TITLE:

Equipment Carriage

SIZE	DWG. NO.	REV
B	CNC.02.40	

SCALE: 1:2 | WEIGHT: 0.50 | SHEET 1 OF 1