ITEM NO.	PART NUMBER	DWG. NO.	QTY.
1	Frame Base 2	CNC.24.01	1
2	FrameBaseMountPart2	CNC.02.52	1
3	ISO 4762 M3 x 8 - 8N		2
4	M3 NYLOC DIN 985	No	2

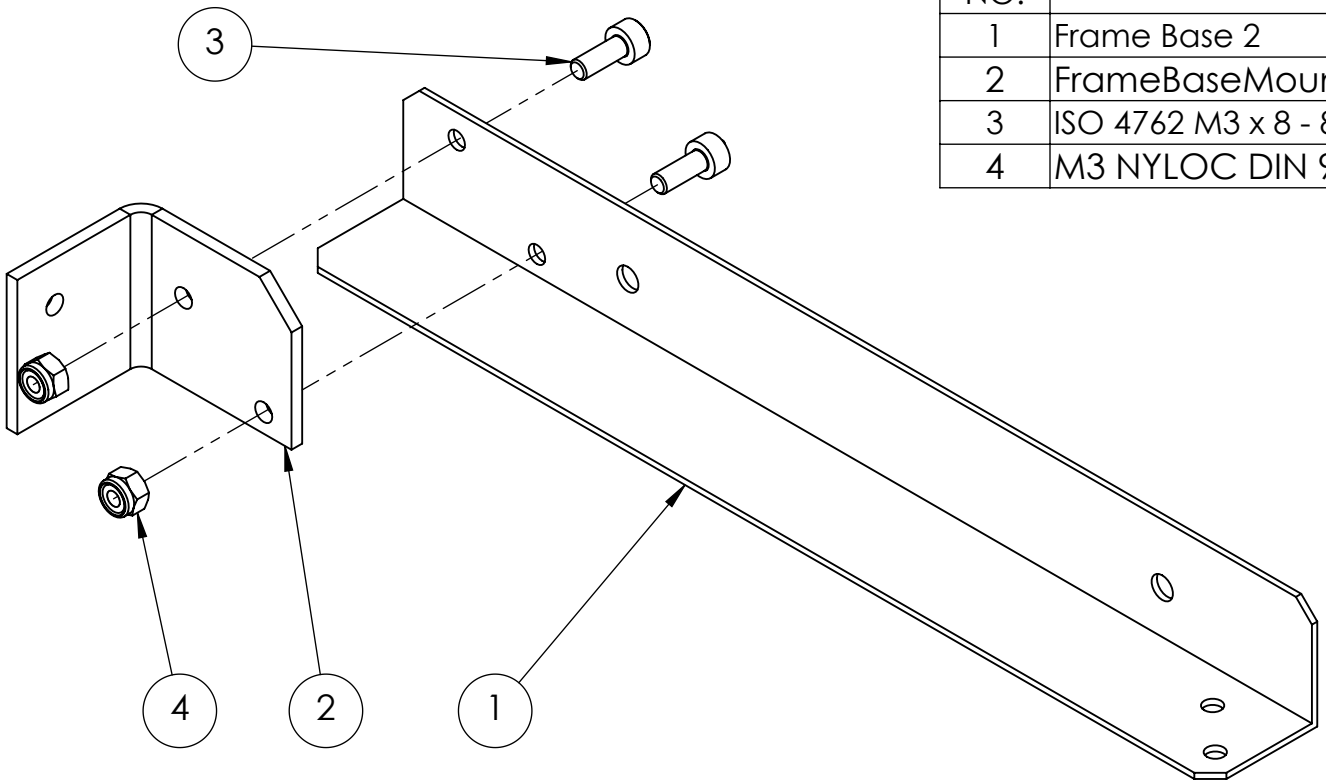

NOTE:
1. FOR MATERIALS AND MANUFACTURING LINKS REFER TO CNC_BOM.PDF
2. FOR MORE DINFORMATION SEE CAD FILE: CableChainMountFrameX.SLDASM

PROPRIETARY AND CONFIDENTIAL
THE INFORMATION CONTAINED IN THIS DRAWING IS THE SOLE PROPERTY OF VR. ANY REPRODUCTION IN PART OR AS A WHOLE WITHOUT THE WRITTEN PERMISSION OF VR IS PROHIBITED.

NEXT ASSY | USED ON
APPLICATION

UNLESS OTHERWISE SPECIFIED:
BREAK ALL SHARP EDGES
DIMENSIONS ARE IN MILLIMETERS
TOLERANCES:
FRACTIONAL ±
ANGULAR: MACH ± BEND ±
TWO PLACE DECIMAL ±
THREE PLACE DECIMAL ±
INTERPRET GEOMETRIC TOLERANCING PER:
MATERIAL Multimaterial
FINISH None
DO NOT SCALE DRAWING

	NAME	DATE
DRAWN		
CHECKED		
ENG APPR.		
MFG APPR.		
Q.A.		

COMMENTS:

Vladimir Tyrkin
veres.pcb@gmail.com

VR

TITLE:
Cable Chain Mount Frame X

SIZE A | DWG. NO. CNC.02.50 | REV

SCALE: 1:1 | WEIGHT: 0.04 | SHEET 1 OF 1