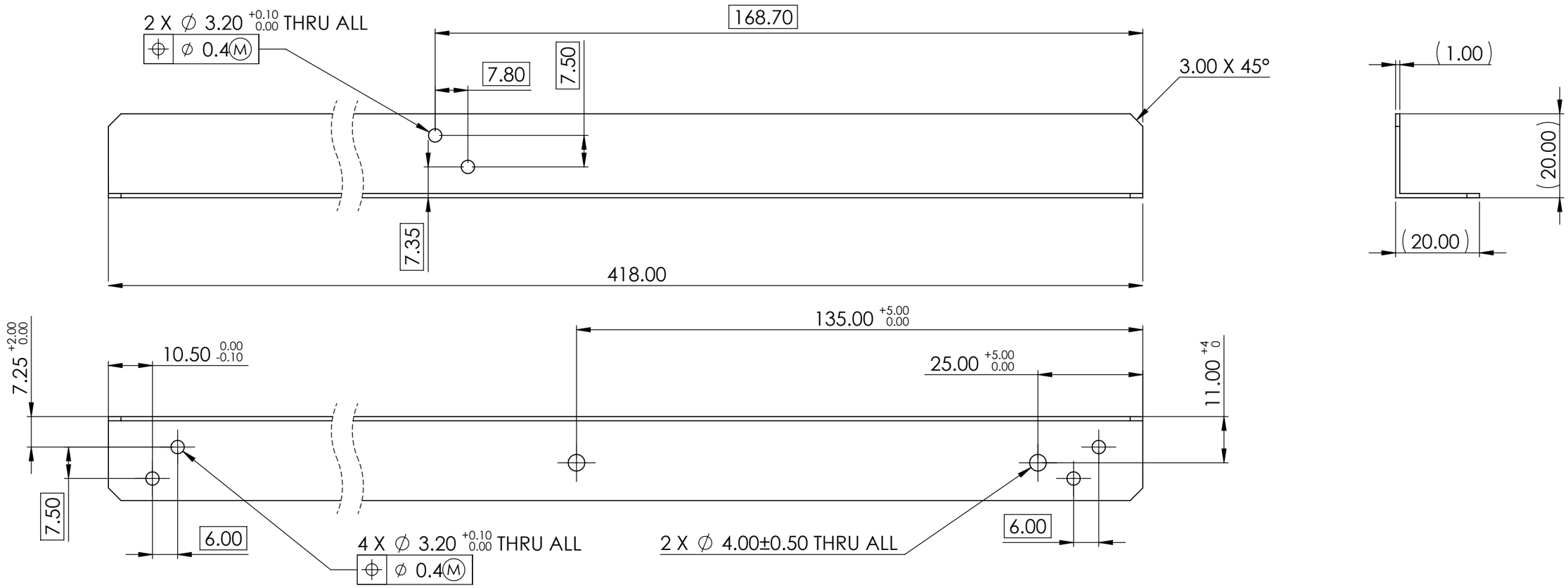

NOTE:

1. MATERIAL: ANODIZED ARCHITECTURAL 6063 ALUMINUM 90 DEGREE ANGLE, MCMASTER-CARR P/N: 4630T124.
2. GENERAL TOLERANCE DIN ISO 2768-mK.
3. FOR MORE DIMENSIONS SEE CAD FILE: FrameBase1.SLDPRT.

PROPRIETARY AND CONFIDENTIAL

THE INFORMATION CONTAINED IN THIS DRAWING IS THE SOLE PROPERTY OF VR. ANY REPRODUCTION IN PART OR AS A WHOLE WITHOUT THE WRITTEN PERMISSION OF VR IS PROHIBITED.

NEXT ASSY	USED ON
APPLICATION	

UNLESS OTHERWISE SPECIFIED:

BREAK ALL SHARP EDGES
DIMENSIONS ARE IN MILLIMETERS
TOLERANCES:
FRACTIONAL ±
ANGULAR: MACH ± BEND ±
TWO PLACE DECIMAL ±
THREE PLACE DECIMAL ±

INTERPRET GEOMETRIC TOLERANCING PER:

MATERIAL 6063-T5

FINISH As machined

DO NOT SCALE DRAWING

	NAME	DATE
DRAWN		
CHECKED		
ENG APPR.		
MFG APPR.		
Q.A.		

COMMENTS:

Vladimir Tyrkin
veres.pcb@gmail.com

VR

TITLE:

Frame Base 1

SIZE	DWG. NO.	REV
B	CNC.01.21	

SCALE: 1:1 | WEIGHT: 43.77 | SHEET 1 OF 1