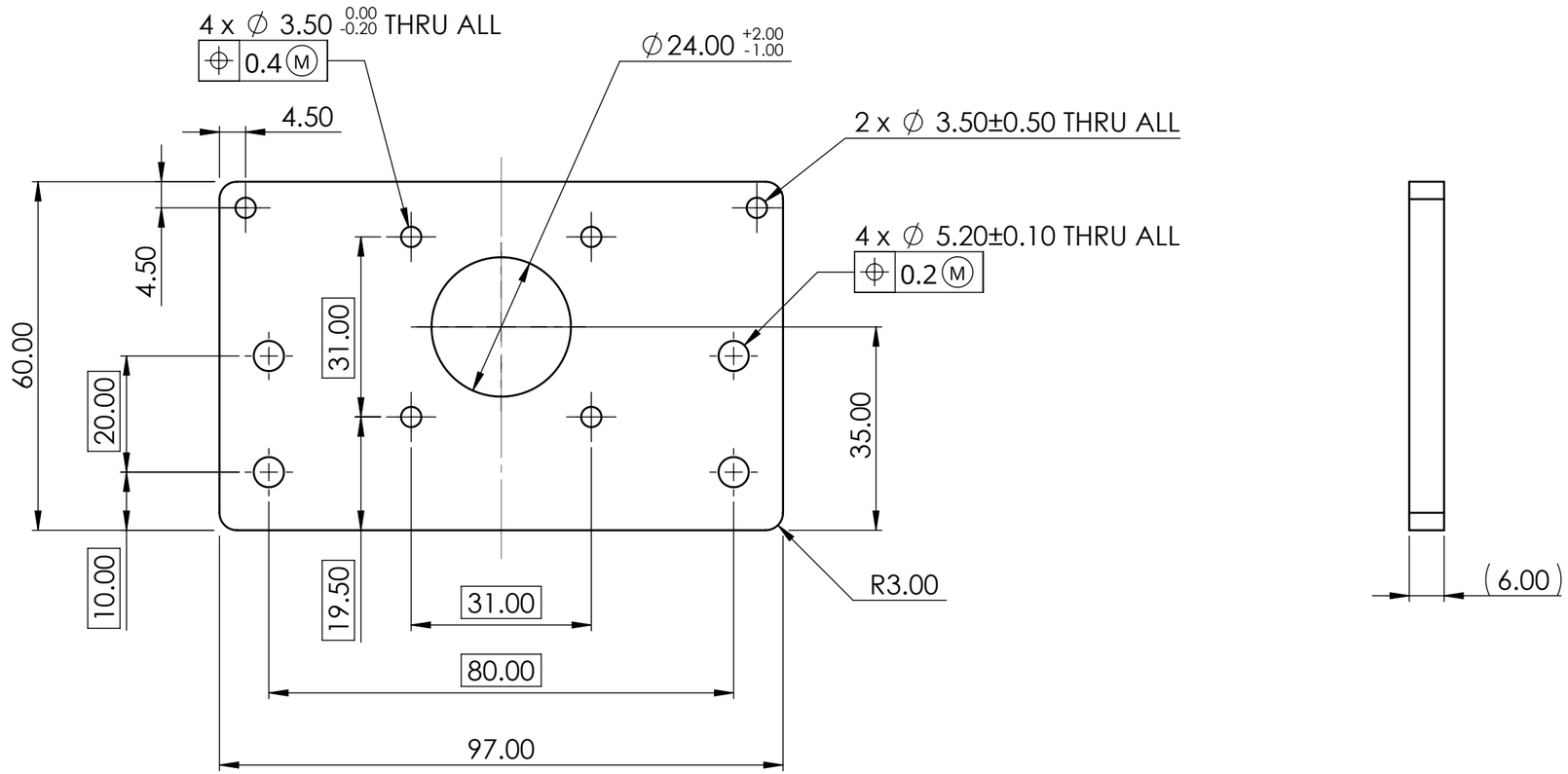

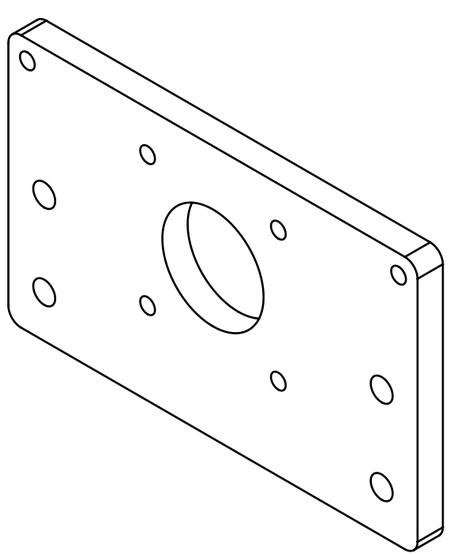

NOTE:
1. MATERIAL: POLYCARBONATE PLASTIC SHEET. MCMASTER-CARR P/N: 8574K281.
2. GENERAL TOLERANCE DIN ISO 2768-mK.
3. FOR MORE INFORMATION SEE CAD FILE: Stepper Base.SLDPRT.
4. PRODUCTION FILE: parts for cnc.DWG.

PROPRIETARY AND CONFIDENTIAL
THE INFORMATION CONTAINED IN THIS DRAWING IS THE SOLE PROPERTY OF VR. ANY REPRODUCTION IN PART OR AS A WHOLE WITHOUT THE WRITTEN PERMISSION OF VR IS PROHIBITED.

NEXT ASSY	USED ON
APPLICATION	

UNLESS OTHERWISE SPECIFIED:
BREAK ALL SHARP EDGES
DIMENSIONS ARE IN MILLIMETERS
TOLERANCES:
FRACTIONAL ±
ANGULAR: MACH ± BEND ±
TWO PLACE DECIMAL ±
THREE PLACE DECIMAL ±
INTERPRET GEOMETRIC TOLERANCING PER:
MATERIAL Polycarbonate (PC)
FINISH No
DO NOT SCALE DRAWING

	NAME	DATE
DRAWN		
CHECKED		
ENG APPR.		
MFG APPR.		
Q.A.		

COMMENTS:
Vladimir Tyrkin
veres.pcb@gmail.com

VR

TITLE:
Stepper Base

SIZE	DWG. NO.	REV
B	011	
SCALE: 1:1	WEIGHT: 37.88	SHEET 1 OF 1