This article was downloaded by: [155.246.103.35] On: 06 April 2017, At: 06:20
Publisher: Institute for Operations Research and the Management Sciences (INFORMS)
INFORMS is located in Maryland, USA

Management Science

Publication details, including instructions for authors and subscription information:
http://pubsonline.informs.org

Money Talks: Rebate Mechanisms in Reputation System Design

Lingfang (Ivy) Li, Erte Xiao

To cite this article:
Lingfang (Ivy) Li, Erte Xiao (2014) Money Talks: Rebate Mechanisms in Reputation System Design. Management Science 60(8):2054-2072. http://dx.doi.org/10.1287/mnsc.2013.1848

Full terms and conditions of use: http://pubsonline.informs.org/page/terms-and-conditions

This article may be used only for the purposes of research, teaching, and/or private study. Commercial use or systematic downloading (by robots or other automatic processes) is prohibited without explicit Publisher approval, unless otherwise noted. For more information, contact permissions@informs.org.

The Publisher does not warrant or guarantee the article's accuracy, completeness, merchantability, fitness for a particular purpose, or non-infringement. Descriptions of, or references to, products or publications, or inclusion of an advertisement in this article, neither constitutes nor implies a guarantee, endorsement, or support of claims made of that product, publication, or service.

Copyright © 2014, INFORMS

Please scroll down for article—it is on subsequent pages

INFORMS is the largest professional society in the world for professionals in the fields of operations research, management science, and analytics.
For more information on INFORMS, its publications, membership, or meetings visit http://www.informs.org

MANAGEMENT SCIENCE
Vol. 60, No. 8, August 2014, pp. 2054–2072
ISSN 0025-1909 (print) | ISSN 1526-5501 (online)

http://dx.doi.org/10.1287/mnsc.2013.1848
© 2014 INFORMS

Downloaded from informs.org by [155.246.103.35] on 06 April 2017, at 06:20 . For personal use only, all rights reserved.

Money Talks: Rebate Mechanisms in Reputation System Design

Lingfang (Ivy) Li
Department of Industrial Economics, School of Management, Fudan University, 200433 Shanghai, China,
lingfangivy.li@gmail.com

Erte Xiao
Department of Social and Decision Sciences, Carnegie Mellon University, Pittsburgh, Pennsylvania 15213,
exiao@andrew.cmu.edu

Reputation systems that rely on voluntary feedback from traders are important in creating and sustaining trust in markets. Feedback nevertheless is a public good, and providing it is often costly. We combine theory with a laboratory experiment to study the effect of a seller precommitment mechanism: Sellers have an option to commit by providing a rebate to reduce the buyer's feedback reporting cost before making purchasing decisions. Our theory predicts that this mechanism induces noncooperative sellers to cooperate in the listed-price market. Using a buyer–seller trust game with a unilateral feedback scheme, we find that the seller's rebate decision has a significant impact on the buyer's purchasing decision via *signaling* the seller's cooperative type. More importantly, market efficiency under the precommitment mechanism increases with the probability that sellers will provide a rebate. Compared with the no rebate mechanism market, more efficient trades can be achieved when the sellers offer a rebate to the buyers in the market with the rebate mechanism, even when the rebate does not cover the full cost of feedback reporting.

Data, as supplemental material, are available at http://dx.doi.org/10.1287/mnsc.2013.1848.

Keywords: reputation; trust; feedback mechanism; asymmetric information; public good; experimental economics

History: Received July 3, 2011; accepted July 26, 2013, by Teck-Hua Ho, behavioral economics. Published online in *Articles in Advance* March 12, 2014.

1. Introduction

Asymmetric information is a common problem in exchange environments. The online market is a typical example. Because online traders are usually anonymous and geographically dispersed, participants in these markets often have limited information about their trading partners or products. Efficient exchanges in such markets must consistently rely on trust among traders. Reputation systems as information aggregation devices have been designed to establish and sustain trust.[1] A commonly adopted mechanism to build a reputation system is to rely on voluntary feedback from involved parties. Recent research, however, finds that the feedback systems may not be reliable due to missing or biased information.[2] For example, only about 50% of buyers leave feedback after transactions on eBay. Furthermore, the existing feedback is biased toward the positive due to missing negative feedback.

Previous research has identified two main explanations for the missing or biased information in feedback systems.[3] One is the direct cost associated with reporting feedback (such as time and effort of reporting). The other is the design of the feedback system itself. For example, in an eBay-like bilateral system where both a buyer and a seller can leave feedback for each other after a transaction, the buyer may hesitate to leave negative feedback for fear of seller retaliation. Based on these explanations, various solutions have been proposed to promote contribution in feedback systems. For example, Miller et al. (2005) and Jurca and Faltings (2007) propose truth-eliciting incentive schemes to induce buyers to report

[1] See Aperjis and Johari (2010), Archak et al. (2011), Bajari and Hortacsu (2004), Bolton and Ockenfels (2009), Brandts and Figueras (2003), Brown and Morgan (2006), Dellarocas (2003a), Dewan and Hsu (2004), Fehr et al. (2009), Friedman and Resnick (2001), Houser and Wooders (2006), Jin and Kato (2006), Sobel (2009), Shapiro (1983), Resnick et al. (2006), and Yamagishi and Matsuda (2002). Buyer protection plans are another mechanism to promote trust in online markets (see Cai et al. 2013).

[2] See Resnick and Zeckhauser (2002), Cabral and Hortacsu (2010), and Dellarocas and Wood (2008).

[3] See Avery et al. (1999), Bolton et al. (2004, 2013), Chen et al. (2010), Dellarocas and Wood (2008), Bolton and Ockenfels (2009), Masclet and Pénard (2012), and Li (2010b).

RIGHTSLINK

Downloaded from informs.org by [155.246.103.35] on 06 April 2017, at 06:20 . For personal use only, all rights reserved.

honestly. These mechanisms often require the market (e.g., eBay) to provide incentives. Li (2010a) proposes a precommitment mechanism in an online auction market that gives sellers an option to commit by providing a rebate to fully cover the buyer's reporting cost. In theory, this mechanism plays a dual role of providing an incentive for buyers to leave feedback and providing a device for sellers to signal quality or effort to cooperate. However, applying the theory to practice requires information about the reporting costs for each potential buyer, which is difficult to obtain in real-world markets.

This paper contributes to both academic research and mechanism design in the real business world on how to improve reputation systems to solve asymmetric information problems. First, we expand the model of the precommitment mechanism to a more common market in the naturally occurring environment—a listed-price market. We also add heterogeneous beliefs and reporting costs when building the model and deriving the hypothesis. We then conduct a lab experiment to examine the effect of the precommitment mechanism on market efficiency by using monetary incentives as the rebate form. In addition to testing our theoretical predictions, the experiment provides valuable information on people's reporting and trading behavior that have important practical implications.

In particular, we design the experiment to answer the following questions: (1) How does the rebate mechanism affect market efficiency when the rebate does not fully cover every buyer's reporting costs? (2) Is the honesty of the reports affected by monetary incentives? (3) Can we eliminate the positive bias of feedback by shutting down the possibility of retaliation? To answer the last question, we use a unilateral feedback system where only buyers can leave feedback to sellers.[4] Moreover, sellers and buyers are randomly and anonymously rematched after each round.

The answers to these questions can help guide the design of these mechanisms in the real world. For instance, if the rebate mechanism can improve market efficiency when the rebate does not fully cover every buyer's reporting costs, then we need not estimate every buyer's reporting costs to implement the mechanism. Otherwise, we would need to find the highest reporting cost to make the mechanism work, and sellers may not choose the rebate option if it is too costly.

We find that, in contrast to the positive bias observed in the eBay studies, our feedback is negatively biased because the reporting cost has a significant negative effect on the buyer's propensity to leave feedback when the seller cooperates but not when the seller defects. This result suggests that changing a bilateral feedback system to a unilateral system might not be sufficient to correct the bias of feedback; rather it might simply lead the bias in another direction.[5] We also find that a seller's rebate offer increases the buyer's propensity to report only when the seller cooperates, not when the seller defects, and the rebate does not affect the honesty of the feedback. Thus, the rebate mechanism can reduce the negative bias of feedback.

More importantly, this paper provides empirical evidence that the rebate mechanism increases a buyer's propensity to buy not only because of its role in covering the reporting cost, but also through its signaling effect. Consistent with this signaling effect, the more often a seller offers the rebate, the more likely he will cooperate, even if the rebate amount does not cover all of the reporting cost. Under the rebate mechanism, market efficiency increases with the probability that sellers will provide a rebate. Compared with a no rebate market, more efficient trades are achieved when the sellers offer a rebate to the buyers in the market with a rebate mechanism. These findings suggest that fully covering the reporting cost is not required. We discuss the implications of these findings in applying the mechanism to a real-world market at the end of this paper.

2. Related Literature

Given the importance of the reputation mechanism for facilitating trading in markets that have asymmetric information problems, numerous studies have examined the reliability of feedback systems. Studies by Resnick and Zeckhauser (2002), Cabral and Hortacsu (2010), and Dellarocas and Wood (2008) show that the feedback systems suffer from the problems of missing or biased information. Avery et al. (1999), Bolton et al. (2004), and Chen et al. (2010) argue one reason is that feedback is a public good and there are direct costs such as time and effort associated with reporting feedback. Thus, the feedback system suffers the free-rider problem prevalent in public goods provision. Another reason that has been widely

[4] An alternative design to reduce the opportunities for retaliation is to prohibit sellers from leaving negative feedback for buyers, as eBay decided to implement in May 2008 (see http://www2.ebay.com/aw/core/200801290559182.html, accessed September 28, 2008). For more discussion on this policy, see Li (2010a). The unilateral feedback system we study in this paper is similar to the reporting system of Amazon, except that Amazon uses a five-star rating scheme and we use a positive/neutral/negative rating scheme. For a comparison between the bilateral system of eBay and the unilateral system of Amazon Marketplace, refer to Chwelos and Dhar (2007).

[5] The negative bias may also reduce market efficiency because it makes buyers underestimate the trustworthiness in the market and not buy as often as they should.

RIGHTSLINK

Downloaded from informs.org by [155.246.103.35] on 06 April 2017, at 06:20 . For personal use only, all rights reserved.

studied is the indirect cost of reporting caused by the design of the feedback system itself (Dellarocas and Wood 2008, Bolton and Ockenfels 2009, Li 2010b). For example, in an eBay-like bilateral feedback system where both a buyer and a seller can leave feedback for each other after a transaction, the buyer may hesitate to leave negative feedback for fear of seller retaliation (Masclet and Pénard 2012, Bolton et al. 2011).[6]

In view of these identified problems, scholars have proposed various solutions to improve the effectiveness of feedback systems. For example, Ba et al. (2003) and Dellarocas (2003b) suggest additional monitoring systems to generate feedback and induce sellers to cooperate. Miller et al. (2005) and Jurca and Faltings (2007) propose truth-eliciting incentive schemes to induce buyers to report honestly. Still, all of these mechanisms either require buyers to bear the reporting cost or require the market (e.g., eBay) to provide incentives. If the reporting cost remains on the buyer's side, buyers might lack the incentive to leave feedback. If the market provides such incentives, it may burden itself because of a huge volume of transactions. Dellarocas and Wood (2008) provide a sophisticated computation mechanism designed to remedy distortions introduced by reporting bias. Their mechanism is computationally complicated for nonresearchers, which creates a barrier for real-world application.

Li (2010a) proposes a precommitment mechanism in which sellers have the option to provide rebates (not necessarily in a monetary form) for feedback, regardless of whether the feedback is positive or negative. This mechanism transfers the cost to the seller, who might be willing to bear the reporting cost because it helps him signal that he will cooperate and thus makes him more attractive to buyers. Once provided, the rebate also gives buyers an incentive to leave feedback. However, the theory only examines the effect of the precommitment mechanism in an auction market, where the seller has the incentive to provide a rebate because it can increase the selling price. Thus, it remains unclear how the rebate mechanism works in a more common market, such as a listed-price market. In addition, the paper only discusses the condition when the rebate covers the reporting cost completely.

This paper contributes to the existing literature by extending this theory of the precommitment mechanism to a listed-price market and providing experimental evidence to understand how the underlying mechanism affects market efficiency and how it might be implemented in the market.

3. The Rebate Mechanism

In this section, we derive theoretical predictions of the outcomes under the precommitment mechanism in a listed-price market environment in which the price of the product is predetermined and fixed. In this paper, the precommitment option takes the form of a monetary rebate offer. Consider a market with M sellers and N buyers where sellers list the same good (g) in each period. For each period, a buyer is randomly matched with a seller and decides whether to buy the product. Suppose M and N are large and $M \ll N$, so a buyer will not meet the same seller again.[7] If the buyer decides to buy, the seller then decides whether to cooperate. For simplicity, in the rest of this paper, we consider the seller as cooperative when he ships the product as promised.

Suppose a buyer values the product at V_b, a seller's cost of the product is V_s, and the market price of the product is set at P, where $V_s < P < V_b$. The utilities for buyer and seller are as follows:

- U_b(buyer does not buy) $= U_s$(buyer does not buy) $= 0$;
- U_b(buyer buys, seller ships) $= V_b - P$; U_s(buyer buys, seller ships) $= P - V_s$;
- U_b(buyer buys, seller does not ship) $= -P$; U_s(buyer buys, seller does not ship) $= P$.

For simplicity, we assume that $V_s = 0$ for all sellers, $V_b = 1$ for all buyers, and both buyers and sellers are risk neutral.

In the naturally occurring environment, sellers usually can decide what quality of transaction outcomes to provide. We incorporate this factor in the model by assuming sellers can make an effort to influence the quality of transaction outcomes, and the game repeats T periods.[8] If a seller puts forth effort ($e = 1$), he will ship the products with probability 1. If a seller does not put forth effort ($e = 0$), he will not ship the products with probability 1. We assume there are two types of sellers: a good type, θ_G, and a bad type, θ_B. For good sellers, the cost of making an effort is 0, $C_{\theta_G}(e = 1) = 0$, and for bad sellers, the cost of making an effort is $C_{\theta_B}(e = 1) = C^e > 0$. To simplify, we assume good sellers will always make an effort, since it costs

[6] Another possible explanation for the positive bias is that buyers might tend not to leave negative feedback if they are uncertain about whether a seller harmed them intentionally or whether other factors, such as slow shipping methods, were to blame (Blount 1995, Fehr and Gächter 2000b, Houser and Xiao 2010). Other than the positive bias found in eBay-like bilateral reputation systems, some researchers find that the cost of rating makes the ratings distribution in Amazon-like five-star systems more polarized (Hu et al. 2009, Lafky 2011).

[7] Resnick and Zeckhauser (2002) report that 89% of all buyer–seller pairs conducted just one transaction during the five-month period covered by their data set.

[8] We consider a mixed model with both adverse selection and moral hazard with finite T periods.

RIGHTSLINK

Downloaded from informs.org by [155.246.103.35] on 06 April 2017, at 06:20 . For personal use only, all rights reserved.

nothing to them. In this case, a bad seller needs to consider whether to make the effort part of his strategy. We assume that all buyers report honestly if they decide to report.

We consider that buyers may have different experiences or beliefs in online shopping; for example, optimistic buyers may believe that most online sellers are good, and pessimistic buyers may believe the opposite. We assume that buyer i has the initial belief that the proportion of good sellers in the market is μ_0^i, and the proportion of bad sellers is $1-\mu_0^i$, where μ_0^i is a random draw from a distribution on $[0,1]$.[9] The probability of sale at period t prior to the last period is $\Pr(\mu_{t-1}^i+(1-\mu_{t-1}^i)\hat{e}_t^i \geq P)$, where $\hat{e}_t^i$ is buyer i's belief about the proportion of bad sellers that exert effort in period t.

Let $s(h_{t-1})$ be the probability that a bad seller makes an effort in period t under feedback history h_{t-1}, and we denote $s(h_0)$ as s_0 and $s(h_t)$ as s_t for all $t \in \{1,\ldots,T-1\}$. The buyer i's belief that the seller is a good type in period 2 after seeing a good report in period 1 is

$$\mu_1^i = \Pr(\theta_G \mid GR) = \frac{\Pr(GR \mid \theta_G)\Pr(\theta_G)}{\Pr(GR \mid \theta_G)\Pr(\theta_G)+\Pr(GR \mid \theta_B)\Pr(\theta_B)} = \frac{\mu_0^i}{\mu_0^i+s_0(1-\mu_0^i)}.$$

Up to period t, if all of the past reports of the matched seller are good reports, then the updated prior of meeting a good seller in period t is

$$\mu_{t-1}^i = \frac{\mu_{t-2}^i}{\mu_{t-2}^i+s_{t-2}(1-\mu_{t-2}^i)}.$$

In the last period, T, the buyer i's belief that a seller is a good type is $\mu_T^i=\mu_0^i$, if all reports the seller received for earlier $T-1$ periods are good. The probability of sale in the last period is $\Pr(\mu_0^i \geq P)$, since bad sellers will not make an effort in the last period. To simplify notation, we denote $\Pr(\mu_0^i \geq P)$ as $p(\mu_0)$. Let δ be the seller's discount factor to transform the future payoff to the present value, and let γ be the probability of reporting.

Based on the model setup, we derive the following propositions.

Proposition 1. *In a market where all buyers report, if $C^e \leq \delta \cdot P \cdot p(\mu_0)$, there exists an equilibrium in which bad sellers make a genuine effort for $t=1$ to $t=T-1$ but cease to do so in the last period, and buyers buy for $t=1$ to $t=T-1$, but the probability of sale is $p(\mu_0)$ for $t=T$.*

Proof. See Online Appendix A. (Online appendices available at http://www.ivy-li.net/resources/Appendix1.pdf.)

[9] Here we allow for heterogeneous beliefs of buyers, which is not modeled in Li (2010a).

In a market where all buyers report (i.e., $\gamma=1$), if the cost of effort is less than the benefit of having a good reputation in the future, a bad seller will choose to make an effort and maintain a good reputation for the $T-1$ periods. He will not make an effort in the last period, since the last period's reputation will not help him gain from future trade. In the equilibrium, buyers buy from a seller who has no negative feedback until the last period if $\mu_0^i \geq P$, and do not buy from a seller who has any negative feedback. The scenario in Proposition 1 is desirable since all reputation information can be reported voluntarily; however, in real life, not all people would voluntarily report as we mentioned in the introduction. Next, we consider another case where no one reports at all.

If the reporting cost is more than the maximum reporting benefit for all buyers, then no buyer will be inclined to report (i.e., $\gamma=0$).[10] In this case, bad sellers do not make an effort in any period, and buyers make buying decisions based on their prior beliefs of sellers being a good type, so a seller's expected payoff is $p(\mu_0)P$ for every period. Good sellers are worse off than in the case where all buyers report. So a good seller has an incentive for his good reputation to be recorded in the market.

When the rebate mechanism is introduced and the amount of rebate is enough to cover some buyers' reporting costs, those buyers would be willing to report when provided a rebate. Thus, good sellers have incentives to choose the rebate option if the benefit from reputation is higher than the rebate cost. Suppose buyers' net reporting costs (i.e., reporting cost minus psychological reporting benefit) C_i are uniformly distributed in $[0,\bar{C}]$, and the rebate amount is $r>0$. Then, the probability of reporting is $\gamma=r/\bar{C}$ if the seller chooses the rebate option. For simplicity, we assume rebate r is small relative to a buyer's gain of trade, so it only affects buyers' reporting decisions but does not affect their purchase decisions.

The next propositions show the equilibrium for introducing the rebate mechanism to the scenario where no one reports voluntarily.

Proposition 2A. *When the rebate covers the highest net reporting cost, that is, $r \geq \bar{C}$, and $r \leq P-\delta \cdot P \cdot p(\mu_0)-C^e$ and $C^e \leq \delta \cdot P \cdot p(\mu_0)$ are satisfied, then there exists an equilibrium in which both good and bad sellers provide rebates for $t=1$ to $t=T-1$ but do not provide rebates for $t=T$, bad sellers exert effort for $t=1$ to*

[10] There may be psychological benefits from reporting, for example, altruism and reciprocation. Feedback can be a way for buyers to reciprocate, especially when the sellers defect. Previous research suggests that people are often willing to incur costs to punish norm violations or reward good deeds (Andreoni et al. 2003, Ariely et al. 2009, Bénabou and Tirole 2006, de Quervain et al. 2004, Fehr and Gächter 2000a, Nikiforakis 2008, Xiao and Houser 2005).

RIGHTSLINK

Downloaded from informs.org by [155.246.103.35] on 06 April 2017, at 06:20 . For personal use only, all rights reserved.

$t = T - 1$ but cease to do so in the last period, and buyers buy for $t = 1$ to $t = T - 1$, but the probability of sale is $p(\mu_0)$ for $t = T$.

Proof. See Online Appendix B(1).

Proposition 2B. *When the rebate does not cover the highest net reporting cost, that is, $r < \bar{C}$, and*

$$r \le \sqrt{\bar{C}[P - \delta \cdot P \cdot p(\mu_0) - C^e]}$$

and bad sellers' effort cost $C^e \le (r/\bar{C}) \cdot \delta \cdot P \cdot p(\mu_0)$ are satisfied, then there exists an equilibrium in which both good and bad sellers provide rebates for $t = 1$ to $t = T - 1$ but do not provide rebates for $t = T$, bad sellers exert effort for $t = 1$ to $t = T - 1$ but cease to do so in the last period, and buyers buy for $t = 1$ to $t = T - 1$, but the probability of sale is $p(\mu_0)$ for $t = T$.

Proof. See Online Appendix B(2).

In the equilibrium, sellers choose to give rebates prior to the last period if the benefit from providing the rebate is higher than not providing it, i.e., $r \le (P - \delta \cdot P \cdot p(\mu_0) - C^e)/\gamma$, where $\gamma = 1$ if $r \ge \bar{C}$, and $\gamma = r/\bar{C}$ if $r < \bar{C}$.[11] The rebate mechanism can promote market efficiency by covering the reporting cost because those buyers whose reporting costs are covered by the rebate will report. Bad sellers know that if they provide the rebate but do not exert effort, they are likely to get negative feedback and lose all future trades. Thus, bad sellers who choose to give a rebate will exert effort as long as their expected benefit from making an effort is higher than that from not making an effort, i.e., $C^e \le \gamma \cdot \delta \cdot P \cdot p(\mu_0)$, where $\gamma = 1$ if $r \ge \bar{C}$, and $\gamma = r/\bar{C}$ if $r < \bar{C}$. This equilibrium is supported by the off-equilibrium path belief that anyone who does not choose the rebate option in any period prior to the last period will not make an effort. Therefore, we see that the rebate mechanism not only covers buyers' reporting costs to make reputation information available and thus induce bad sellers to cooperate, but it also provides a device for sellers to signal their type or their effort to cooperate. Even when $r < \bar{C}$, conditions exist such that both bad and good sellers will provide rebates and bad sellers will exert an effort up to period $t = T - 1$.

The report for the last period does not help sellers gain from future trades, so no seller needs a report, and no one will provide a rebate for period T. In the last period, a bad seller has no incentive to make an effort as analyzed in the proof of Proposition 1. Expecting this, buyers will decide whether to buy according to their initial beliefs in the last period if the matched seller has not received any bad reports.

[11] The condition $r \le \sqrt{\bar{C}[P - \delta \cdot P \cdot p(\mu_0) - C^e]}$ in Proposition 2B is calculated by substituting γ with $r/\bar{C}$ into the equation of $r \le (P - \delta \cdot P \cdot p(\mu_0) - C^e)/\gamma$. The condition $C^e \le (r/\bar{C}) \cdot \delta \cdot P \cdot p(\mu_0)$ in Proposition 2B is calculated in the same way.

Figure 1 **Buyer–Seller Game (Auto_fb Treatment)**

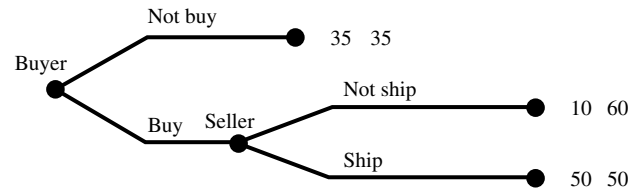

Note. The first number is the buyer's payoff and the second number is the seller's payoff.

4. Experimental Design

We design five treatments to examine how the feedback reporting cost influences trading behavior and, more importantly, whether the rebate option serves as a signaling device and improves market efficiency. The five treatments are as follows: (1) computer automatic feedback treatment (Auto_fb); (2) a free feedback treatment with reporting cost 0 (C0); (3) a higher feedback cost treatment with cost 10 (C10); (4) a lower feedback cost treatment with cost 5 (C5); and (5) the higher feedback cost treatment with a partial rebate equal to 5 (C10r5). Each treatment consists of 10 rounds. In each round, each subject is randomly paired with another subject. One round is randomly selected as the payment round. Each round consists of two stages. The first stage is exactly the same in each treatment. Treatments differ in the second stage.

The first stage is a buyer–seller game (modified from Bolton et al. 2004) described in Figure 1.[12] In this stage, subjects are paired anonymously, with one acting as a seller and the other acting as a buyer. If the buyer decides not to buy the product, the game will end, and each participant will earn 35E$ (experiment dollars). If the buyer decides to buy the product, then the seller decides whether to ship the product. If the seller ships the product, each participant earns 50E$. If the seller does not ship the product, the seller earns 60E$, and the buyer earns 10E$.[13]

In the second stage, the seller receives feedback. The seller is informed of the feedback he receives in each round. Starting from the second round, each buyer sees the paired seller's feedback from all the previous rounds.

Computer Automatic Feedback Treatments (*Auto_fb*). In this treatment, the computer automatically records the feedback for each seller. If the buyer did not buy the product in the first stage, then the seller has no decision to make. In this case, the seller receives "N/A (no report)." If the buyer bought the

[12] Gazzale and Khopkar (2011) also modified Bolton et al. (2004) to test whether allowing buyers to develop reputations for information sharing can increase trust and trustworthiness.

[13] The corresponding payoffs in the model setup are $V_b = 40$, $V_s = 10$, and $P = 25$.

RIGHTSLINK

Downloaded from informs.org by [155.246.103.35] on 06 April 2017, at 06:20 . For personal use only, all rights reserved.

product and the seller shipped the product, the computer automatically leaves a "+ (positive)" feedback for the seller. If the seller did not ship the product, the seller receives a "− (negative)" feedback. All of these are common knowledge. Therefore, in this treatment, the reputation mechanism is complete and perfect in that the costless feedback truthfully and fully reveals the seller's behavior in the past (see Bolton and Ockenfels 2009).

Feedback Cost 10 *Treatment* (C10), *Feedback Cost* 5 *Treatment* (C5), *and Feedback Cost* 0 *Treatment* (C0). In the C10, C5, and C0 treatments (see Figure 2), after the buyer purchases the product and the seller makes the shipping decision, the buyer can leave feedback for the seller at the cost of 10E$ in the C10 treatment, 5E$ in the C5 treatment, or 0E$ in the C0 treatment.

As we mentioned earlier, if there is some psychological benefit to reporting, buyers might be willing to incur some monetary cost to report. Ex ante, we do not know the magnitude of this value of reporting. We speculate that, for some buyers, the psychological benefit of reporting may be higher than the monetary cost of 5E$, and these buyers will report in this treatment. Our goal is to test the effectiveness of the rebate mechanism when the feedback system is ineffective due to the cost of reporting. We design the C10 treatment where the reporting cost is 10E$. This is the highest reporting cost we could impose so that the buyer would not have a negative earning from the game (since, when the buyer is cheated, her payoff is 10E$). When we derive the hypotheses below, we assume the reporting cost of 10E$ is high enough that the buyer will not report in this treatment.

If a buyer decides to rate her seller, the buyer can leave positive, negative, or neutral feedback. If the buyer decides not to rate the seller, the seller will receive "N/A (no report)" as feedback for that round. In addition, if the buyer does not purchase the product, the paired seller also receives feedback of "N/A (no report)" in that round; that is, if the seller has feedback of "N/A (no report)," this means that either the buyer did not purchase the product or the buyer purchased but did not report feedback. We design the feedback mechanism this way to closely mimic real online markets where there is no feedback, both when there is no trade and when the buyer is not willing to leave feedback.

Feedback Cost 10 *with Rebate* 5 *Treatment* (C10r5). The design of the C10r5 treatment is the same as the C10 treatment except that at the beginning of each round, before the buyer decides whether to purchase the product, the seller first decides whether to provide a rebate of 5E$ to cover half of the reporting cost the buyer will incur if she leaves feedback for the seller (see Figure 3). If the seller provides the rebate and the buyer pays 10E$ to report the feedback in the second stage, there is a 5E$ transfer from the seller to the buyer at the end of the round. On the other hand, if the buyer does not leave feedback, the 5E$ rebate transfer does not happen even if the seller provides the rebate. Each buyer can see whether her seller provides the rebate when deciding whether to purchase the product.

We design the rebate value equal to 5E$ to examine the signaling role of rebates. In the C10r5 treatment, if the seller provides a rebate of 5E$, the buyer's payoff scenario is equivalent to that of the C5 treatment. Similarly, if the seller does not provide a rebate of 5E$, the buyer's payoff scenario is equivalent to that of the C10 treatment. Thus, by comparing buyers' decisions in the C5 (or C10) treatment to those in their payoff equivalent scenario in the C10r5 treatment, we can draw inferences regarding the nonmonetary value of sellers' rebate choices to buyers. Note that we could design a rebate value equal to 10E$,

Figure 2 C10/C5/C0 Treatment (C = 10, 5, and 0, Respectively, in the Game Trees Below)

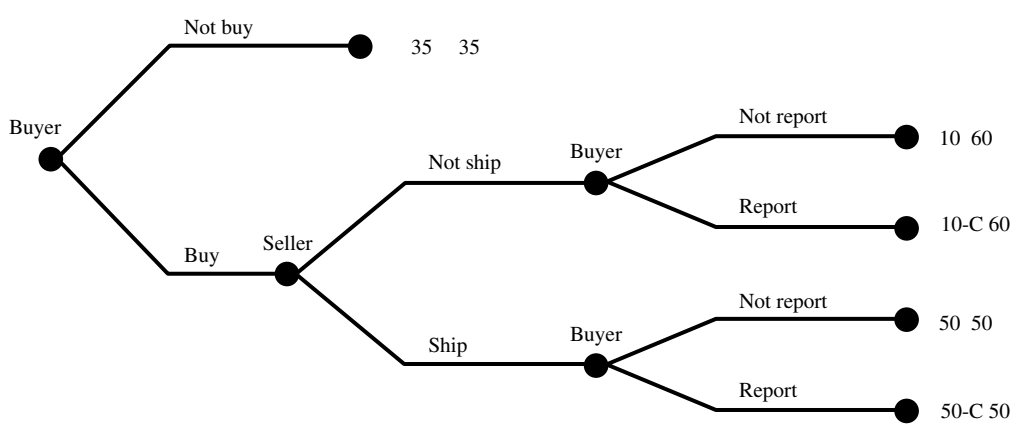

Note. See the note to Figure 1.

RIGHTSLINK

Downloaded from informs.org by [155.246.103.35] on 06 April 2017, at 06:20 . For personal use only, all rights reserved.

Figure 3 **C10r5 Treatment**

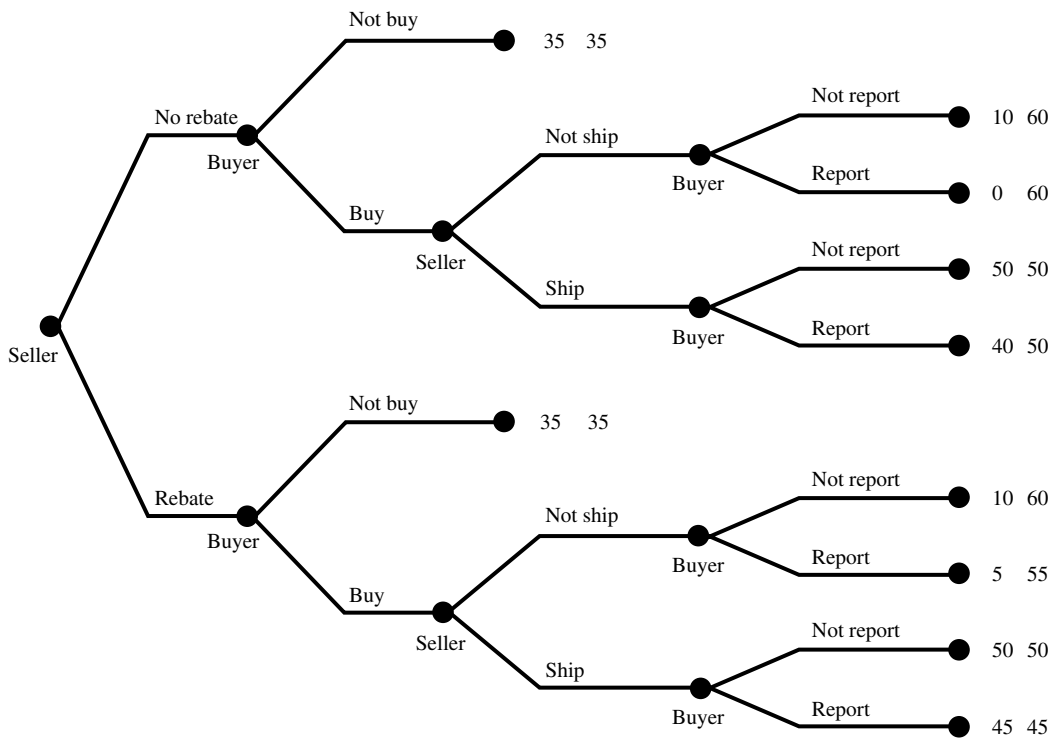

Note. See the note to Figure 1.

and when the seller provides a rebate, the buyer's net reporting cost would be zero, which is cost equivalent to the C0 treatment. However, because it is often hard to accurately quantify the buyer's reporting cost in a real market, we choose to study the rebate mechanism when the rebate amount is not sufficient to cover the full cost of reporting.

Note that the feedback each seller receives is either positive, negative, neutral, or N/A. Since sellers in each treatment have two decisions to make—rebate and ship—then in principle, buyers can leave feedback based on their satisfaction regarding not only the seller's shipping decision but also the rebate decision. For example, buyers might leave negative feedback if the seller did not provide the rebate even if the seller shipped the product. However, as we report in §6, in this treatment we do not observe any incidence of buyer feedback decisions that are inconsistent with the seller's shipping decision.

Procedure. The experiment was conducted at the Pittsburgh Experimental Economics Laboratory using *z*-tree (Fischbacher 2007). Subjects were each randomly and anonymously assigned a role, and the role was fixed in all 10 rounds. Each subject was randomly and anonymously rematched with another subject in each round. One round was randomly chosen as the payoff round. We ran 16 sessions in total: three sessions for each of the Auto_fb, C0, C5, and C10 treatments, and four sessions for the C10r5 treatment. Each session lasted less than one hour. No one could participate in more than one session. Each subject was paid \$5 for showing up in addition to the earnings from the games. The exchange rate was 5E\$ = \$1. Subjects were paid privately. We obtained observations from 266 subjects: 24 pairs in Auto_fb, 26 pairs in C0, 23 pairs in C5, 24 pairs in C10, and 36 pairs in C10r5.

5. Hypotheses

In this section, we derive predictions of sellers' and buyers' decisions based on our theory framework discussed in §3.

5.1. Buyers' Reporting Decisions

Hypothesis 1. *Buyers are less likely to report when reporting is costly*:

$$0 \cong \Pr(report \mid C10)$$
$$< \Pr(report \mid C5) < \Pr(report \mid C0) = 1.$$

We assume that buyers are risk neutral and utility maximizers. When the reporting cost is 0E\$, all buyers report; therefore, $\Pr(report \mid C0) = 1$, since some buyers' psychological benefit of reporting may be lower than the monetary cost of 5E\$. Thus, some but not all buyers will report in this treatment ($0 < \Pr(report \mid C5) < 1$). We also assume the reporting cost of 10E\$ is high enough to overwhelm the psychological benefit of reporting, and thus we predict $0 \cong \Pr(report \mid C10)$.

RIGHTSLINK

Downloaded from informs.org by [155.246.103.35] on 06 April 2017, at 06:20 . For personal use only, all rights reserved.

5.2. Buyers' Purchasing Decisions

Hypothesis 2. *Buyers are less likely to buy when reporting is costly*:

$$\Pr(buy \mid C10) < \Pr(buy \mid C5) < \Pr(buy \mid C0) = \Pr(buy \mid Auto_fb).$$

As we mentioned earlier, a good seller always makes an effort, so he will always get positive feedback, if any. A bad seller may strategically choose to make an effort. If he does not make an effort in some rounds and the buyers in those rounds report, then he will definitely receive some negative feedback. As a consequence, no buyer will buy from him in the future.

In §3, we show that a buyer's propensity to buy at period t prior to the last period is $\Pr(\mu^i_{t-1} + (1-\mu^i_{t-1})\hat{e}_t \geq P)$, where $\hat{e}_t$ is the buyer's belief about the proportion of bad sellers that exert an effort in period t. In the C10 treatment, we assume that the reporting cost is high enough that no one reports feedback, i.e., the probability of reporting $\gamma = 0$. Since there is no reputation information, buyers cannot distinguish between bad sellers and good sellers, bad sellers will not make an effort, and only optimistic buyers will buy. In the C0 treatment, the reporting cost is 0, so all buyers report, i.e., the probability of reporting is $\gamma = 1$. In this case, bad sellers know that if they fail to make an effort, they will definitely get negative feedback and no one will buy from them in the future. Consequently, they will make an effort for higher future payoffs if the present value of future benefit exceeds the payoff from noncooperation in the current period, i.e., $C^e \leq \delta \cdot P \cdot p(\mu_0)$. In the C5 treatment, those buyers whose psychological benefit of reporting is more than the reporting cost of 5E$ will leave feedback, and the probability of reporting is $0 < \gamma < 1$. In this case, bad sellers know that if they fail to make an effort, they will get negative feedback with probability γ and no one will buy from them in the future after seeing the negative feedback. Consequently, they will make an effort for higher future payoffs if $C^e \leq \gamma \cdot \delta \cdot P \cdot p(\mu_0)$. This condition is more restrictive than the condition for the C0 case. Thus, sellers are more likely to exert an effort in the C0 treatment than in the C5 treatment. Accordingly, buyers in the C5 treatments are less likely to purchase than those in the C0 and Auto_fb treatments. The probability of purchasing in the C10 treatment is the lowest.[14]

[14] If our assumption that no one reports in the C10 treatment is invalid (i.e., some buyers still report or sellers believe that some buyers will report), then bad sellers would make an effort to ship the products like in the C5, C0, and Auto_fb treatments. As a result, the probability of buying in the C10 treatment would be no different than in the other treatments.

Hypothesis 3. *Buyers take "no rebate" as a signal of a bad seller who does not make an effort*:

$$\Pr(buy \mid C10) > \Pr(buy \mid no\ rebate, C10r5) \quad and$$
$$\Pr(buy \mid rebate, C10r5) > \Pr(buy \mid no\ rebate, C10r5).$$

As stated in Proposition 2, in the equilibrium, both good and bad sellers choose to give a rebate and exert effort prior to the last period as long as the derived conditions are satisfied. This equilibrium is supported by the off-equilibrium path belief that anyone who does not choose the rebate option in any period prior to the last period will not make an effort, so no buyer will buy if the matched seller does not choose to offer a rebate. This hypothesis is to test whether the off-equilibrium path belief set in the theory is reasonable in real practice. The reporting cost in the C10 treatment is the same as in the C10r5 treatment when the seller does not offer a rebate, but the latter case provides additional information about the seller's quality. Thus, ceteris paribus, buyers should be less likely to buy the product in the latter case than in the former.

Comparing the case in the C10r5 treatment where the seller offers a rebate and the case where the seller does not offer a rebate, buyers expect the seller to be more likely to cooperate in the former than in the latter case. Additionally, the reporting cost for the buyer is lower in the former case than in the latter case. Thus, we predict that in the C10r5 treatment, buyers will be more likely to buy when the seller offers a rebate than when the seller does not.

5.3. Sellers' Rebate and Shipping Decisions

Hypothesis 4. *Sellers are less likely to ship when reporting is costly*:

$$\Pr(ship \mid C10) < \Pr(ship \mid C5) < \Pr(ship \mid C0) = \Pr(ship \mid Auto_fb).$$

We have analyzed how sellers make shipping decisions in the discussion of Hypothesis 2. In the C10 treatment, we assume that no one will report ($\gamma = 0$). Thus, bad sellers will not put forth an effort. In the C5 treatment, since some buyers will report $0 < \gamma < 1$, bad sellers in the C5 treatment are more likely to exert effort than in the C10 treatment if they care more about future payoffs. In the C0 and Auto_fb treatments, reputation information is fully revealed. Thus, the likelihood for bad sellers to exert effort is the highest among all the treatments.[15]

[15] If our assumption that no one reports in the C10 treatment is invalid, then the probability of shipping in the C10 treatment would be no different than in the C0, C5, and Auto_fb treatments for the same reason stated in Footnote 14.

RIGHTSLINK

Downloaded from informs.org by [155.246.103.35] on 06 April 2017, at 06:20 . For personal use only, all rights reserved.

Table 1 Descriptive Summary of the Decisions

	Buyer					Seller	
			Reporting rate[a] (%)				
Treatment	No. of observations	Purchasing rate (%)	Overall	Seller shipped	Seller did not ship	No. of observations[a]	Shipping rate[a]
Auto_fb	240	79.17				190	88.42
C0	260	82.69	99.07	98.95	100	215	88.84
C5	230	69.57	31.88	28.36	50	160	83.75
C10	240	67.50	10.49	3.79	40	162	81.48
C10r5_reb	261	83.91	27.85	26.06	38.71	219	85.84
C10r5_noreb	83	36.14	33.33	11.76	61.54	30	56.67

Note. Auto_fb, computer automatic feedback treatment; C0, feedback cost 0 treatment; C5, feedback cost 5 treatment; C10, feedback cost 10 treatment; C10r5_reb, the seller provided a rebate in the feedback cost 10 with rebate 5 treatment; C10r5_noreb, the seller did not provide a rebate in the feedback cost 10 with rebate 5 treatment.

[a]The rate is calculated based on the cases where buyers chose to buy.

Hypothesis 5. *Sellers' decisions not to offer a rebate signal an intention to defect*:

$$\Pr(ship \mid rebate, C10r5) > \Pr(ship \mid no\ rebate, C10r5).$$

In the equilibrium, both good and bad sellers choose to give a rebate and exert effort prior to the last period as long as the derived conditions are satisfied. Since bad sellers' strategy on making effort is "if choose rebate then exert effort, if not choose rebate then do not exert effort," then bad sellers will only choose to offer a rebate if they decide to make an effort; otherwise, they will not choose to offer a rebate and not make an effort.[16] Therefore, we predict that in the C10r5 treatment, sellers who do not provide a rebate will be less likely to ship the product than those who offer a rebate.

From our hypotheses, we expect that under the rebate mechanism, market efficiency is increasing with the frequency of rebates offered by the sellers. We define efficient trades as cases where the buyer buys and the seller ships. As discussed in Hypothesis 3, when the rebate mechanism is introduced, a buyer is more likely to buy when the seller offers a rebate than when the seller does not offer a rebate. Meanwhile, Hypothesis 5 suggests that, under the rebate mechanism, the shipping rate is higher when sellers offer a rebate than when sellers do not offer a rebate. Combining these two hypotheses, we predict that the more likely it is for a buyer to receive a rebate, the more efficient are the trades the market can achieve.

6. Results

In this section, we first report results of buyers' decisions, followed by results of sellers' decisions. We then examine how the rebate mechanism affects market efficiency.

[16] See Online Appendix B for more details on players' strategy profiles.

6.1. Buyers' Feedback Reporting Decisions

Our data suggest that buyers report feedback honestly most of the time in the C0, C5, C10, and C10r5 treatments. In all treatments, buyers choose to leave feedback in 352 out of the 786 cases where the buyers decided to buy. Among these 352 cases, there are only four cases where buyers left negative or neutral feedback to a seller who shipped the product.[17] In all the other cases where the buyers chose to leave feedback, they left positive feedback for cooperative sellers and negative feedback for noncooperative sellers. Thus, in the following analysis, we focus only on the frequency of reporting and not the honesty or accuracy of reporting.

We first compare buyers' feedback reporting behavior in the C5 and C10 treatments to test Hypothesis 1.

Result 1. *The cost of feedback has a significant negative effect on the buyer's reporting decision.*

We calculate the feedback reporting rate among those buyers who purchased the product in each treatment (see Table 1). About 99% of buyers left feedback for the seller when it was free to report. In contrast, about 32% of buyers left feedback for the seller when the cost of doing so was 5E$. When the reporting cost was 10E$, only about 10% of buyers left feedback. Using the data from C0, C5, and C10 treatments, we ran a random individual effect logit regression

[17] One buyer in the C0 treatment left negative feedback in the ninth period after the seller shipped the product. This buyer left positive feedback in all the other periods when the matched seller shipped the product. One buyer in the C5 treatment left negative feedback in one round after the seller shipped the product. The feedback behavior of this buyer in the following rounds, however, is consistent with the shipping decisions of her paired seller. So the negative feedback could be a mistake made by this buyer in the early rounds of the session. One buyer in the C10 treatment left neutral feedback in one round after the seller shipped the product. Also, one buyer in the C10r5 treatment left neutral feedback after her seller provided a rebate and shipped the product.

RIGHTSLINK

Downloaded from informs.org by [155.246.103.35] on 06 April 2017, at 06:20 . For personal use only, all rights reserved.

Table 2 Buyers' Feedback Reporting Decisions: Random Individual Effect Logit Regression Model

	Report$_{i,t}$ (= 1 if report in round t; = 0 if no report)					
	(1) Includes C0, C5, and C10 treatments		(2) Includes C5 and C10 treatments		(3) Includes C5, C10, and C10r5 treatments	
	Coefficients (s.e.)	Marginal effect	Coefficients (s.e.)	Marginal effect	Coefficients (s.e.)	Marginal effect
Round(t)	−0.08 (0.07)	−0.01	−0.44*** (0.14)***	−0.01	−0.26*** (0.07)	−0.01
Final round dummy	−0.42 (0.81)	−0.08	−3.69 (1.45)	−0.02	−2.54*** (0.84)	−0.07
C10	−2.46*** (0.65)	−0.50				
C5	−0.60 (0.58)	−0.11				
C0	6.52*** (1.09)	0.79				
C10ship			−5.17*** (1.52)	−0.11	−4.68*** (1.12)	−0.16
C10noship			2.82** (1.45)	0.15	1.56 (0.99)	0.16
C5ship			−0.09 (1.06)	−0.00	−0.62 (0.79)	−0.03
C5noship			4.85*** (1.59)	0.56	3.12*** (1.02)	0.50
C10r5ship					−0.88 (0.62)	−0.05
C10r5noship					1.70** (0.83)	0.18
Wald chi-squared	57.24		27.52		61.43	
No. of observations	537		322		571	

Note. In all of the regressions, we suppress the constant term to include all the relevant treatment dummies. Numbers in parentheses are the standard errors.
**Significant at the 5% level; ***significant at the 1% level.

analysis of the probability that buyers who bought the product would leave feedback (see Table 2, column (1)). The independent variables include round, dummy for the final round, and three treatment dummies.[18] In this regression and all the following regressions, we suppress the constant term to include all the relevant treatment dummies. We find the coefficients of the treatment dummies are significantly different from each other (chi-squared tests, $p \leq 0.01$).[19] These results support our Hypothesis 1, that the cost of feedback has a significant and negative effect on the buyer's reporting decision. On the other hand, inconsistent with Hypothesis 1, the reporting rate is significantly positive in the C10 treatment (t-test, $p < 0.01$).

Previous research has shown that people are more willing to punish bad behavior than to reward good behavior (e.g., Keysar et al. 2008). If reporting feedback is a way for the buyer to reciprocate to the seller, we should expect *negative bias* in feedback reporting behavior in that buyers would be more willing to leave negative feedback when the seller did not ship the product than to leave positive feedback when the seller shipped the product. In light of this, we next investigate how buyers left feedback in the C0, C5, and C10 treatments and compare how cost affects a buyer's propensity to leave feedback when the seller ships versus when the seller does not ship the product.

Result 2. *Negative bias exists in reporting behavior when there is a cost to report, but not when reporting is free. Moreover, the propensity of buyers to leave feedback is more sensitive to the reporting cost when the seller is cooperative than when the seller defects.*

When it is free to report feedback (C0 treatment), almost all of the buyers reported after they chose to purchase (buyers did not report in only 2 out of 215 transactions). Thus, as shown in Table 1, in the C0 treatment we did not observe a difference in feedback reporting rates between when the seller did not ship

[18] In all of the following regression models, we always first consider the possible session effects by including dummies for each session in the regressions. We find the session dummies are not jointly significant in any regression (chi-squared test, $p > 0.10$). Thus, we report regressions without including session dummies.

[19] All of the coefficient comparison tests reported henceforth are chi-squared tests with two-tailed p-values.

RIGHTSLINK

Downloaded from informs.org by [155.246.103.35] on 06 April 2017, at 06:20 . For personal use only, all rights reserved.

(98.95% reported) and when the seller shipped the product (100% reported). In contrast, in both the C5 and C10 treatments, buyers were more likely to leave feedback when the seller did not ship the product than when the seller shipped the product (50% versus 28% in the C5 treatment and 40% versus 4% in the C10 treatment, respectively). Thus, reporting behavior is negatively biased when there is a positive net cost of reporting.

To provide statistical evidence, we ran a random individual effect logit regression analysis of feedback reporting behavior (see Table 2, column (2)). The only difference between this regression and the regression analysis reported in Table 2, column (1), is that we separated the cases of cooperative sellers from the noncooperative sellers. Since buyers leave feedback about 99% of the time in the C0 treatment, we do not include this treatment in the regression analysis. Thus, the independent variables include *round*, *final round dummy*, and the interactions between treatment dummies and whether the seller shipped the product. We find that the coefficient of C10ship is significantly different from that of C10noship and the coefficient of C5ship is significantly different from that of C5noship ($p < 0.01$).

Moreover, the coefficient of C10noship is not significantly different from C5noship ($p = 0.19$). However, the coefficient of C10ship is significantly different from C5ship ($p < 0.01$). These results suggest that the propensity of buyers to leave feedback is less sensitive to the reporting cost when the seller defects than when the seller cooperates. Thus, higher reporting costs lead to more negative-biased reporting behavior.[20] This is consistent with previous findings that there exists an asymmetry in positive and negative reciprocity.[21]

Next, we consider the effect of the rebate mechanism on buyers' reporting behavior.

Result 3. *The rebate mechanism can mitigate the negative bias in the feedback reporting behavior.*

In the C10r5 treatment, the buyers report feedback 25% of the time when the seller shipped and 45% of the time when the seller did not ship. Thus, the difference in the reporting rate between when the seller shipped and when the seller did not ship is smaller in the C10r5 than in the C10 treatment.

To provide statistical evidence of the effect of the rebate mechanism on buyers' reporting decisions, we expand the random effect logit regression model in Result 2 by including the data from the C10r5 treatment. For C10r5 treatment data, we also separate the cases where the seller cooperated from the cases where the seller defected. The results of the regression are reported in Table 2, column (3). First, the regression results show that the coefficient of C10r5ship is significantly higher than that of C10ship (chi-squared test, $p < 0.01$), which confirm the effect of the rebate mechanism on promoting reporting behavior by covering the cost. Interestingly, consistent with the findings above, the coefficient of C10r5noship is not significantly different from that of C10noship (chi-squared test, $p = 0.90$). Second, we find that the difference between the coefficients of C10r5ship and C10r5noship is significantly smaller than that between the coefficients of C10ship and C10noship (chi-squared test, $p < 0.01$), but not significantly different from that between the coefficients of C5ship and C5noship (chi-squared test, $p > 0.21$).

6.2. Buyers' Purchasing Decisions

To test Hypotheses 2 and 3, we first report the comparison of buyers' purchasing behavior in the Auto_fb, C0, C5, and C10 treatments to see how buyers' purchasing behavior is affected by the feedback reporting cost. We then compare buyers' purchasing behavior in the C10r5 treatment with Auto_fb, C0, C5, and C10 to explore how it is affected by the rebate mechanism.

As shown in Table 1, on average, buyers purchase the product 79% of the time in the Auto_fb treatment, 83% of the time in the C0 treatment, 70% of the time in the C5 treatment, and 68% of the time in the C10 treatment. This result is consistent with our Hypothesis 2. However, these differences are not statistically significant. We start our analysis with a simple random individual effect logit regression model of buyers' purchasing decisions, including only *round*, *final round dummy*, and four treatment dummies as independent variables. The results are reported in Table 3, column (1). We find that the coefficients of C5, C10, and Auto_fb are not jointly significantly different from each other ($p = 0.35$), nor is any pairwise comparison of the coefficients of any two treatments significant ($p > 0.10$).

Result 4. *Supporting Hypothesis* 3, *buyers are significantly less likely to buy the product when the seller did not provide the rebate in the* C10r5 *treatment than when the seller provided the rebate or when there is no rebate opportunity at all.*

[20] One explanation is that, because sellers' decision is binary (ship versus not ship), buyers who are willing to incur the cost to leave feedback may implicitly collude and take N/A (no feedback) as an indicator that the seller shipped the product and negative feedback as indicating the seller did not ship. Thus, these buyers can economize on the cost of building a reputation system by just leaving negative feedback when the sellers do not ship and not leaving positive feedback when the sellers ship. In the C10 treatment, the increased cost of reporting may facilitate this collusion, and buyers are thus much less likely to leave positive feedback.

[21] See Abeler et al. (2010), Al-Ubaydli and Lee (2009), Gazzale and Khopkar (2011), Keysar et al. (2008), and Offerman (2002).

RIGHTSLINK

Downloaded from informs.org by [155.246.103.35] on 06 April 2017, at 06:20 . For personal use only, all rights reserved.

Table 3 Buyers' Purchasing Decisions: Random Individual Effect Logit Regression Model

	$\text{Buy}_{i,t}$ (= 1 if purchased in round t; = 0 if not)			
	(1) Includes Auto_fb, C0, C5, and C10 treatments		(2) Includes all five treatments	
	Coefficients (s.e.)	Marginal effect	Coefficients (s.e.)	Marginal effect
Round (t)	−0.02	−0.00	−0.03	0.00
	(0.04)		(0.10)	
Final round	−1.56***	−0.28	−2.10***	−0.20
(= 1 if $t = 10$)	(0.36)		(0.52)	
C10	1.62***	0.15	3.03***	0.07
	(0.56)		(0.98)	
C5	1.65***	0.15	3.10***	0.07
	(0.56)		(0.97)	
C0	2.74***	0.23	2.82***	0.08
	(0.56)		(1.01)	
Auto_fb	2.23***	0.19	2.13**	0.06
	(0.55)		(0.98)	
$\sum_{t=1}^{t-2}$ Positive $\text{fb}_{i,t}$			−0.04	0.00
			(0.12)	
$\sum_{t=1}^{t-2}$ Negative $\text{fb}_{i,t}$			−1.87***	−0.08
			(0.34)	
Positive $\text{fb}_{i,t-1}$			1.62***	0.07
			(0.52)	
Negative $\text{fb}_{i,t-1}$			−2.56***	−0.32
			(0.63)	
$\text{Ship}_{i,t-1}$			0.99**	0.06
			(0.42)	
$\text{C10r5_noreb}_{i,t}$			−1.45	−0.12
			(0.91)	
$\text{C10r5_reb}_{i,t}$			2.74***	0.07
			(0.89)	
Wald chi-squared	71.74		94.25	
No. of observations	970		801	

Note. Numbers in parentheses are the standard errors.
**Significant at the 5% level; ***significant at the 1% level.

As reported in Table 1, in the C10r5 treatment, buyers purchase the product about 84% of the time if the seller provides a rebate (the highest purchase rate among all the conditions), but only about 36% of the time if the seller does not provide the rebate (the lowest purchase rate among all the conditions). To provide statistical evidence comparing the purchase rates in each condition, we further expand our regression model discussed above (Table 3, column (1) regression) by including data from all five treatments.

First, we add dummies for whether the seller provided a rebate to the buyer in a particular round. We also expand our regression model by adding the current matched seller's reputation variables and whether the buyer was cheated in the previous round (i.e., the shipping decision of the previously matched seller). Previous research shows that the reputation history of sellers has a different effect on buyers' decisions depending on when the feedback is reported. In particular, the most recent feedback is more important for the buyer than earlier feedback (see Dellarocas 2003a). In light of this, we separate the most recent feedback in the previous round from the feedback received in the past (round 2 to round $t-2$). For each buyer i in round t, we calculate the total amount of positive feedback and negative feedback received by the matched seller from round 2 to round $t-2$.

Thus, the independent variables in the regression include *round*(t), *final round dummy variable*, C5 *treatment dummy* (C5), C10 *treatment dummy* (C10), C0 *treatment dummy* (C0), *automatic feedback treatment dummy* (Auto_fb), total number of positive feedback the matched seller received up to round $t-2$ ($\sum_{t=1}^{t-2}$ Positive $\text{fb}_{i,t}$), total number of negative feedback the seller received up to round $t-2$ ($\sum_{t=1}^{t-2}$ Negative $\text{fb}_{i,t}$), whether the seller received positive feedback in the previous round (Positive $\text{fb}_{i,t-1}$), whether the seller received negative feedback in the previous round (Negative $\text{fb}_{i,t-1}$), whether the buyer was cheated in the previous round (i.e., whether

RIGHTSLINK

Downloaded from informs.org by [155.246.103.35] on 06 April 2017, at 06:20 . For personal use only, all rights reserved.

the previously matched seller shipped the product in the round $t-1$ ($\text{Ship}_{i,t-1}$)), and whether the seller provided a rebate to the buyer in this round ($\text{C10r5_noreb}_{i,t}=1$ if no rebate is offered to buyer i in round t in the C10r5 treatment and $\text{C10r5_reb}_{i,t}=1$ if a rebate is offered to buyer i in round t). The results are reported in Table 3, column (2).

Consistent with previous literature (see the survey paper by Dellarocas 2003a), the regression results show that buyers are more likely to buy if the seller received positive feedback in the previous round and less likely to buy if the seller received negative feedback in the previous round (the coefficient of Positive $\text{fb}_{i,t-1}$ is significantly positive and the coefficient of Negative $\text{fb}_{i,t-1}$ is significantly negative). Buyers also take into account the total amount of negative feedback received by the seller in the past when deciding whether to buy. The more negative feedback the seller received two rounds ago, the less likely the buyer will be to buy the product (the coefficient of $\sum_{t=1}^{t-2}$ Negative $\text{fb}_{i,t}$ is significantly negative). Interestingly, however, the amount of positive feedback received two rounds ago does not have a significant effect on a buyer's purchasing decision (the coefficient of $\sum_{t=1}^{t-2}$ Positive $\text{fb}_{i,t}$ is not significant).

The regression results support Hypothesis 3: "not providing rebate" provides information about the intention of sellers to make an effort. To see this, first note that buyers are more likely to buy when the seller offers the rebate than when the seller does not (the coefficient of $\text{C10r5_noreb}_{i,t}$ is significantly lower than that of $\text{C10r5_reb}_{i,t}$, $p<0.01$). Second, when the seller does not provide the rebate, the buyer is much less likely to buy than when the seller does not have the rebate opportunity at all (the coefficient of $\text{C10r5_noreb}_{i,t}$ is significantly lower than that of $C10$, $p<0.01$). On the other hand, providing the rebate does not make buyers more likely to buy than when the rebate mechanism is not available (the coefficient of $\text{C10r5_reb}_{i,t}$ is not significantly different from that of either C5 or C10, $p>0.60$).

We next provide evidence that the seller's rebate decision is indeed a credible signal of his cooperativeness.

6.3. Sellers' Rebate and Shipping Decisions

We first test Hypothesis 4 by investigating how sellers' shipping decisions may differ between treatments due to the reporting cost. Then, to test Hypothesis 5, we investigate how sellers make rebate decisions and how rebate decisions are correlated with shipping decisions.

We report sellers' shipping rates in Table 1. Consistent with Hypothesis 4, the shipping rate for the three cases where no rebate is offered is highest in the Auto_fb treatment (88.42%) and in the C0 treatment (88.84%), and lowest in the C10 treatment (81%). The difference, however, is small.

Table 4 **Sellers' Shipping Decisions: Random Individual Effect Logit Regression Model**

	$\text{Ship}_{i,t}$ (= 1 if shipped the product in round t; = 0 if not)	
	Include C10, C5 , C0, and Auto_fb treatments	
	Coefficient (s. e.)	Marginal effect
Round (t)	−0.20*** (0.07)	−0.01
Final round ($t=10$)	−4.70*** (0.78)	−0.71
C10	4.21*** (0.86)	0.08
C5	4.92*** (0.96)	0.09
C0	5.02*** (0.87)	0.14
Auto_fb	4.72*** (0.88)	0.11
Wald chi-squared	65.21	
No. of observations	727	

Note. Numbers in parentheses are the standard errors.
***Significant at the 1% level.

Similar to the analysis of buyers' decisions, we provide statistical evidence by first conducting a random individual effect logit regression analysis of the sellers' shipping decisions including only round variables and C10, C5, C0, and Auto_fb treatment dummy variables. This allows us to see whether the sellers' shipping decisions overall are significantly affected by the feedback reporting cost. The regression results are reported in Table 4. We find that the coefficients of the four treatment dummies are not jointly significantly different from one another ($p=0.83$), nor is any pairwise comparison of the coefficients of any two treatments significant ($p>0.30$). Thus, although our data suggest that the shipping rate is decreasing in the reporting cost, this effect is not significant.

We next examine how sellers make rebate decisions and how the rebate decision is correlated with sellers' shipping decisions.

Result 5. *Sellers are more likely to offer the rebate if they did not offer the rebate in the previous round and the buyer did not buy the product than if they did not offer the rebate in the previous round and the buyer bought the product.*

In the C10r5 treatment, every seller provided a rebate at least once to the buyer. On average, sellers chose to offer a rebate 75% of the time. About 90% of sellers chose to offer a rebate at least half of the time. The distribution of rebate frequency is plotted in Figure 4.

We have shown that most buyers in the C10r5 treatment did not purchase if the seller did not offer the

RIGHTSLINK

Downloaded from informs.org by [155.246.103.35] on 06 April 2017, at 06:20 . For personal use only, all rights reserved.

Figure 4 Distribution of Sellers' Rebate Frequency in the C10r5 Treatment

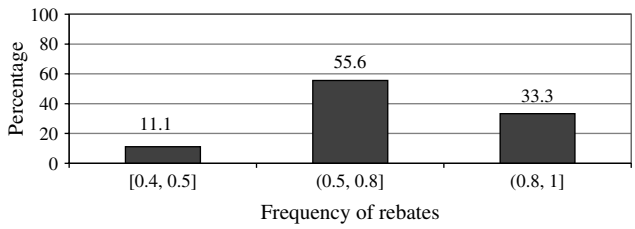

Figure 5 Proportion of Sellers Who Offered Rebates over 10 Rounds

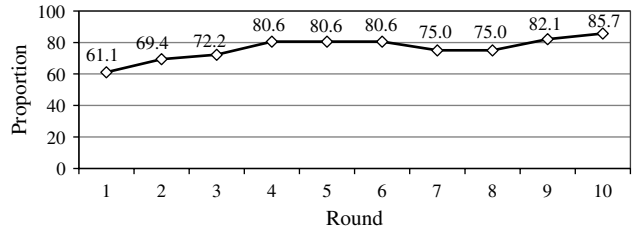

rebate. Sellers who did not offer the rebate may learn from their experience that they are less likely to sell their product if they do not provide a rebate and thus learn to offer rebates over time. To examine whether sellers' rebate decisions are indeed affected by buyers' decisions, we calculate sellers' frequency of offering the rebate in each of four cases, depending on whether the seller provided the rebate in the previous round $t-1$ and whether the buyer bought the product in that round: (1) seller provided the rebate and buyer bought the product in round $t-1$; (2) seller provided the rebate but buyer did not buy the product in round $t-1$; (3) seller did not provide the rebate but buyer bought the product in round $t-1$; and (4) seller did not provide the rebate and buyer did not buy the product in round $t-1$. We find that if the seller provided a rebate in the previous round, his decision on rebate in the current round is not greatly affected by whether the buyer bought the product or not in the previous round (90% versus 97%). In contrast, if the seller did not provide a rebate in the previous round, he is much more likely to provide the rebate in the current round if the buyer did not purchase the product than if the buyer purchased the product in the previous round (51% versus 20%).

To provide statistical evidence on these differences, we ran a random individual logit regression analysis of sellers' rebate decisions in round t. The independent variables include only the four dummies corresponding to each of the four scenarios mentioned above. We find that the coefficients for the first two scenarios when the seller provided the rebate in round $t-1$ (buyer bought the product in round $t-1$ versus did not buy the product) are not significantly different ($p=0.15$), but those for the second two scenarios where the seller did not provide the rebate in round $t-1$ (buyer bought the product in round $t-1$ versus did not buy the product) are significantly different ($p=0.01$).

Furthermore, we see more and more sellers offering the rebate over time. Figure 5 plots the proportion of sellers who offer the rebate from round 1 to round 10. The slope is significantly positive ($p=0.01$), suggesting that over time sellers learn that providing the rebate can increase their chances of making a profit.

Result 6. *The more often a seller provides rebates, the more likely the seller will ship the product.*

To examine whether sellers' shipping decisions are correlated with their rebate decisions, we calculate each seller's frequency of offering rebates and the frequency of shipping the product when the buyer chooses to buy the product. We find that when sellers provide a rebate less than half of the time, their shipping rate is about 63%; in contrast, this rate is 82% for sellers who offer a rebate more than half of the time. To test whether the correlation between rebate and shipping decisions is significant, we ran a Tobit regression analysis of seller i's average shipping rates in the C10r5 treatment using the frequency of rebates seller i offered to the matched buyer as the independent variable. We find that the coefficient of this independent variable is significantly positive ($p<0.01$).

6.4. Market Efficiency

To test the prediction that under the rebate mechanism the market efficiency is increasing with the frequency of rebates offered by the sellers, we first examine the number of efficient trades (i.e., the case where the buyer bought and the seller shipped the product) in each treatment. We then compare the earnings of buyers and sellers for each treatment.

Result 7. *The feedback reporting cost reduces the proportion of efficient trades. Under the rebate mechanism, the number of efficient trades is increasing in the frequency of rebate provided to the buyer.*

We define a variable $\text{Eftrade}_{i,t}=1$ if the buyer bought and received the product, and $\text{Eftrade}_{i,t}=0$ if the buyer did not buy or bought but the seller failed to ship the product. We then calculate the average number of efficient trades over 10 rounds for each buyer: $\text{Avg_Eftrade}_i=\sum_{t=1}^{10}\text{Eftrade}_{i,t}/10$.

Figure 6 plots the proportion of efficient trades in each treatment. For the C10r5 treatment, we also calculate the average efficient trade for the cases when a buyer receives a rebate and when the buyer does not receive a rebate separately (C10r5_reb and C10r5_noreb). Figure 6 shows that the proportion of efficient trades is lower when reporting is costly. In particular, the proportion of efficient trades is significantly lower in the C5 and C10 treatments than the

RIGHTSLINK

Downloaded from informs.org by [155.246.103.35] on 06 April 2017, at 06:20 . For personal use only, all rights reserved.

Figure 6 **Proportion of Efficient Trades in Each Treatment**

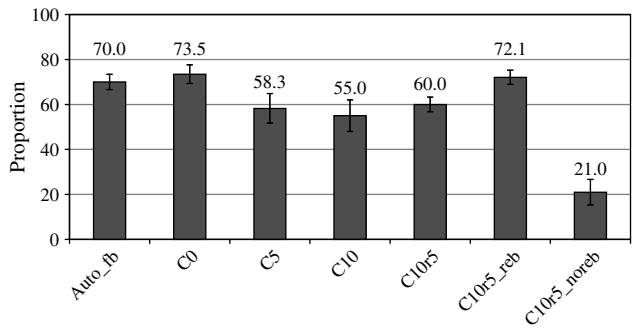

Auto_fb and C0 treatments (70.0 versus 58.3, t-test, one-tailed, $p = 0.06$; 70.0 versus 55.0, t-test, one-tailed, $p = 0.03$; 73.5 versus 58.3, t-test, one-tailed, $p = 0.03$; 73.5 versus 55.0, t-test, one-tailed, $p = 0.01$).

We also find that the proportion of efficient trades is significantly higher in the C10r5_reb case than in the C10 treatment (72.1 versus 55.0, t-test, one-tailed, $p = 0.01$) or the C5 treatment (72.1 versus 58.3, t-test, one-tailed, $p = 0.02$). This result suggests that the rebate mechanism can significantly increase market efficiency as long as the sellers provide a rebate to the buyers. It is consistent with our theory prediction. When the rebate mechanism is introduced into the market and the conditions derived in Proposition 2 are satisfied, if sellers choose to offer a rebate, they will exert effort and buyers will buy from them. In this case, the rebate mechanism promotes efficient trades.

On the other hand, the proportion of efficient trades is significantly lower in the C10r5_noreb case than in the C10 treatment (21.0 versus 55.0, t-test, one-tailed, $p < 0.01$) or the C5 treatment (21.0 versus 58.3, t-test, one-tailed, $p < 0.01$). This result is consistent with our discussion in Proposition 2: If sellers do not choose to offer a rebate, buyers will take it as a signal of not exerting effort and will not buy from them. In the experiment, even the players who are good sellers may not fully understand the mechanism and will not choose the equilibrium behavior to provide a rebate in early rounds, which buyers will take as a signal of no effort and thus not buy from them; this may reduce the number of efficient trades in early rounds. But, as discussed in Result 5 sellers may gradually understand the mechanism and choose the equilibrium behavior. Because of the low market efficiency when sellers did not offer a rebate in the C10r5 treatment, in our experiment setting, the overall market efficiency level in the C10r5 treatment is only slightly higher than in the C10 treatment, and the increase is not significant (t-test, one-tailed, $p > 0.10$).

To further examine the effect of the rebate mechanism on market efficiency, for each buyer in the C10r5 treatment, we calculated over the 10 rounds the average proportion of times she was offered a rebate from a matched seller before deciding whether to purchase the product:

$$\text{Avg_rebtms}_i = \begin{cases} \dfrac{\sum_{t=1}^{10} \text{C10r5_reb}_{i,t}}{10} & \text{if C10r5 treatment,} \\ 0 & \text{if Auto_fb, C0, C5, or C10 treatment,} \end{cases}$$

where $\text{C10r5_reb}_{i,t} = 1$ if buyer i was offered a rebate in round t in the C10r5 treatment. We then ran an ordinary least squares (OLS) regression analysis of Avg_Eftrade_i. The independent variables include five treatment dummy variables and Avg_rebtms_i. The regression results are reported in Table 5. The regression result reveals that the coefficient of C10r5 is significantly different from those of Auto_fb ($p = 0.01$), C0 ($p = 0.01$), and C5 ($p = 0.04$), and marginally significantly different from those of C10 ($p = 0.06$). This again indicates that, under the rebate mechanism, if no rebate is ever offered, the number of efficient trades is marginally lower than when there is no rebate mechanism. In our experiment, on average, sellers chose to offer a rebate 75% of the time in the C10r5 treatment. Our regression results indicate that such a proportion will lead to only a slightly higher efficiency level than in the C10 treatment, and still lower than in the Auto_fb and C0 treatments (overall treatment effect for C10r5 is 0.59 versus 0.55 for C10, 0.70 for Auto_fb, and 0.73 for C0).

Table 5 **Average Proportion of Efficient Trades: OLS Regression Model**

	Avg_Eftrade_i
	Coefficent (s.e.)
C10	0.55***
	(0.05)
C5	0.58***
	(0.05)
C0	0.73***
	(0.05)
Auto_fb	0.70***
	(0.05)
C10r5	0.13
	(0.21)
Avg_rebtms_i	0.61**
	(0.28)
Adjusted R-squared	0.8692
No. of observations	133

Note. Numbers in parentheses are the standard errors.
**Significant at the 5% level; ***significant at the 1% level.

RIGHTSLINK

Downloaded from informs.org by [155.246.103.35] on 06 April 2017, at 06:20 . For personal use only, all rights reserved.

On the other hand, the coefficient of Avg_rebtms_i (i.e., the average proportion of times buyer i was offered a rebate from a matched seller) is significantly positive, which suggests that the more likely a buyer is to receive a rebate from the seller, the more efficient the trades the buyer achieves. We have shown above that in the C10r5 treatment, if we count only the cases where buyers receive a rebate, the market efficiency is significantly higher than when there is no rebate mechanism. In Figure 5 our data show that over time more and more sellers start to choose to offer rebates. In our experiment, there are only 10 trading periods. We expect that in the naturally occurring environments where trading occurs repeatedly, more and more sellers will choose to provide rebates once they gain some experience. Thus, even though the introduction of the rebate mechanism may not immediately promote a higher level of efficiency, over time the market efficiency may increase significantly.

Result 8. *When the rebate mechanism is available, buyers' and sellers' earnings are increasing in the number of rebates offered by sellers.*

Similar to the analysis above, we calculate the average earnings over 10 rounds for each buyer and seller. We find buyers in the C5 and C10 treatments earn significantly less than in the Auto_fb and C0 treatments (39.8 versus 43.2, 39.8 versus 43.7, 39.4 versus 43.2, 39.4 versus 43.7, t-test, one-tailed, $p < 0.01$). For the C10r5 treatment, we also separately calculate the average earnings when a rebate is provided and when a rebate is not provided. First, when buyers receive a rebate from the seller, their earnings are significantly higher than in the C10 treatment (41.7 versus 39.4, t-test, one-tailed, $p = 0.03$) and also higher than in the C5 treatment, but the increase is only marginally significant (41.7 versus 39.8, t-test, one-tailed, $p = 0.07$). When buyers do not receive a rebate from the seller, their earnings are significantly lower than in the C10 and C5 treatments (32.0 versus 39.4, 32.0 versus 39.8, t-test, one-tailed, $p < 0.01$). This negative effect of no rebate offer in C10r5 probably explains why, overall, buyers in the C10r5 treatment earn only slightly more than in the C10 treatment, and the difference is not significant (39.7 versus 39.4, t-test, two-tailed, $p = 0.42$).

Sellers' earnings are significantly lower in the C10 treatments than in the Auto_fb and C0 treatments (46.4 versus 47.8, t-test, one-tailed, $p = 0.04$; 46.4 versus 48.3, t-test, one-tailed, $p = 0.01$). In the C5 treatment, sellers' earnings are significantly lower than in the C0 treatment (46.6 versus 48.3, t-test, one-tailed, $p = 0.03$) and marginally significantly lower than in the Auto_fb treatment (46.6 versus 47.8, t-test, one-tailed, $p = 0.08$). In the C10r5 treatments, we compare the cases when sellers provide a rebate and the cases when sellers do not provide a rebate, and we exclude those sellers who always or never provide a rebate.[22] We find sellers earn more when they provide a rebate than when they do not (47.6 versus 40.1, t-test, one-tailed, $p < 0.01$). Including all the sellers in the C10r5 treatment, we find sellers' earnings are marginally significantly higher when they provide a rebate than in the C10 treatment (47.7 versus 46.4, t-test, one-tailed, $p = 0.06$) and are not significantly higher than in the C5 treatment (47.7 versus 46.6, t-test, one tail, $p > 0.10$). Interestingly, when sellers do not provide a rebate, their earnings are significantly lower than in the C10 and C5 treatments (40.4 versus 46.4, 40.4 versus 46.6, t-test, one-tailed, $p < 0.01$). Overall, sellers earn slightly less in the C10r5 treatment than in the C10 Treatment, although, again, the difference is not significant (45.3 versus 46.7, t-test, two-tailed, $p = 0.30$).

We then run an OLS regression analysis of buyers' and sellers' earnings using the same independent variables as in the regression in Table 5. The results are shown in Table 6. Results of regression (1) for the buyers in Table 6 show that the coefficient of C10r5 is significantly lower than the coefficients of the three other treatments ($p < 0.01$ for all the pairwise tests). This again indicates that if buyers are never offered a rebate, they will earn less than if there is no rebate mechanism (i.e., C10 treatment). If sellers provide a rebate 75% of the time as in our experiment, buyers' earnings are only slightly higher than when there is no rebate mechanism (overall treatment effect for C10r5 is 39.52 versus 39.42 for the C10 treatment).

Table 6 Average Earnings: OLS Regression Models

	Avg_earning_i	
	Buyer (1) Coefficent (s.e.)	Seller (2) Coefficent (s.e.)
C10	39.42***	46.38***
	(0.85)	(0.57)
C5	39.80***	46.57***
	(0.87)	(0.58)
C0	43.71***	48.33***
	(0.82)	(0.55)
Auto_fb	43.21***	47.79***
	(0.85)	(0.57)
C10r5	29.26***	43.47***
	(3.62)	(1.40)
Avg_rebtms_i	13.67***	3.73**
	(4.66)	(1.74)
Adjusted R-squared	0.9898	0.9965
No. of observations	133	133

Note. Numbers in the parentheses are the standard errors.
**Significant at the 5% level; ***significant at the 1% level.

[22] There are 2 sellers who never provide any rebate and 12 sellers who provide a rebate in every round.

RIGHTSLINK

Downloaded from informs.org by [155.246.103.35] on 06 April 2017, at 06:20 . For personal use only, all rights reserved.

On the other hand, the coefficient of Avg_rebtms_i (i.e., the average proportion of times buyer i was offered a rebate from a matched seller) is significantly positive, suggesting that a buyer who receives rebates more often can also earn more. Indeed, the regression results suggest that if a buyer receives rebates every time (i.e., $\text{Avg_rebtms}_i = 1$), she can earn almost as much as the buyers in the Auto_fb treatment. If a buyer receives rebates more than 80% of the time (i.e., $\text{Avg_rebtms}_i = 0.8$), she can earn more than the buyers in the C5 or C10 treatments.

Results of regression (2) for the sellers in Table 6 show that the coefficient of C10r5 is significantly different from those of C10, C5, C0, and Auto_fb ($p = 0.058$, 0.04, 0.00, and 0.01, respectively). These results again suggest that when the rebate mechanism is available, if the sellers do not provide rebates frequently enough, the mechanism will not improve the sellers' earnings. In particular, if sellers do not provide the rebate at all, they will earn even less than if the rebate mechanism is not introduced. If sellers provide a rebate 75% of the time as in our experiment, sellers will earn slightly less than when the rebate mechanism is not available (overall treatment effect for C10r5 is 46.27 versus 46.38 for the C10 treatment).

On the other hand, the regression results also suggest that providing a rebate positively affects sellers' earnings (coefficient of Avg_rebtms_i is significantly positive). The positive coefficient of Avg_rebtms_i indicates that if the seller offers rebates 80% of the time, he can earn more than he does in the corresponding no rebate environment (i.e., the C10 treatment). To earn as much as the sellers in the C5 treatment, the seller needs to provide rebates about 83% of the time.

7. Conclusion

Reputation information is crucial to building cooperation in markets where information is asymmetric. However, reputation systems that rely on voluntary feedback have the problem of missing or biased reports, and thus their effectiveness in promoting trust and trustworthiness in the markets is limited. In this paper, we examine an innovative precommitment mechanism (rebate for feedback) aimed at inducing participation in reputation systems and promoting voluntary cooperation in markets where information is asymmetric. We show, both theoretically and experimentally, that the advantage of this precommitment mechanism is to improve the reputation system without requiring buyers or markets to bear the reporting cost.

In the experiment, we use monetary incentives to examine the effect of the rebate mechanism in a listed-price market with a unilateral feedback system. Our experimental data support theoretical predictions of the behavioral consequences of rebates. One contribution of our experiment is that it provides information on how the rebate mechanism affects buyers' purchasing behavior and reporting behavior and how it affects market efficiency. We find that the honesty of buyer reports is not affected by the seller's rebate decision. We also find that more efficient trades occur when the rebate mechanism is introduced and sellers offer buyers rebates than when there is no rebate mechanism. This is true even when the rebates do not fully cover reporting costs.

We provide empirical evidence that the effectiveness of the rebate mechanism in promoting market efficiency increases with the probability that the sellers offer a rebate. One empirical question that remains is what level of a seller's likelihood to provide a rebate would be required to significantly improve market efficiency in a particular real-world market. The answer depends on the specific settings of a particular market, such as the proportion of bad sellers in the market and the probability buyers would purchase the product in the no rebate market. Nevertheless, our findings provide useful information for implementing the rebate mechanism in the real world.

First, in our experiment, the probability of rebates offered by the sellers is relatively low at the beginning but increases over time. Since market efficiency is increasing in the frequency of rebates being provided, this suggests that it takes time for the rebate mechanism to promote market efficiency. Thus, when first introducing the mechanism, it may be helpful to design some methods to highlight the benefit of providing rebates and motivate sellers to offer a rebate. It may also be helpful to introduce the mechanism first in some sectors of the market to allow traders in other sectors of the market to learn the benefit of providing rebates. In this way, when the rebate mechanism is later introduced in those sectors of the market, sellers will be more willing to adopt the rebate mechanism quickly. Second, we show the rebate need not fully cover reporting costs. This is good news because in a real market it is often hard to accurately quantify the buyer's reporting cost.

In addition, we find that a buyer's propensity to report is more sensitive to the reporting cost when a seller cooperates than when a seller defects. Thus, the feedback from our experiment is negatively biased (see Gazzale and Khopkar 2011). This is in contrast to 99% positive observations from the eBay bilateral feedback system, in which the cost is higher for reporting negative feedback than for positive because of the fear of retaliation. This result also suggests that changing the reporting mechanism from bilateral to unilateral does not necessarily reduce the bias and may only lead the bias in another direction. Furthermore, we find a rebate offer increases a buyer's

RIGHTSLINK

Downloaded from informs.org by [155.246.103.35] on 06 April 2017, at 06:20 . For personal use only, all rights reserved.

propensity to leave feedback when the seller cooperates, but has no significant effect when the seller defects. Thus, the data suggest that introducing a rebate mechanism in the unilateral system can reduce the negative bias by increasing the reporting rate when sellers cooperate.

The precommitment mechanism introduces a way to design feedback systems that allows parties to solve the asymmetric information problem in the market and reach a win–win outcome. The monetary rebate is one example of how to implement such a precommitment mechanism in a listed-price market. It opens the door for future research to analyze different rebate mechanisms in various markets and create field experiments to test the mechanism in the real market.

Supplemental Material

Supplemental material to this paper is available at http://dx.doi.org/10.1287/mnsc.2013.1848.

Acknowledgments

The authors thank Luis Cabral, Yan Chen, Daniel Houser, Ming Huang, Robert Gazzale, Preston McAfee, Paul Resnick, Qianfeng Tang, and Tracy Liu, as well as seminar participants at the University of Michigan, University of Maryland, Carnegie Mellon University, George Mason University, Rutgers University, Peking University, Fudan University, Zhejiang University, the Central University of Finance and Economics, Shanghai University of Finance and Economics, Shanghai Jiaotong University, Southwestern University of Finance and Economics, Baidu Inc., Alibaba Research Institute, and the Shanghai Experimental Economics Workshop 2010 for valuable comments on the earlier drafts. The authors gratefully acknowledge the National Science Foundation [SES-0961341]; the National Basic Research Program of China [973 Program; Serial 2012CB955802]; the University of Louisville Research Incentive program; the Innovation Program of Shanghai Municipal Education Commission [Grant 13ZS055]; and the Berkman Faculty Development Fund for funding that supported this research.

References

Abeler J, Calaki J, Andree K, Basek C (2010) The power of apology. *Econom. Lett.* 107(2):233–235.

Al-Ubaydli O, Lee MS (2009) An experimental study of asymmetric reciprocity. *J. Econom. Behav. Organ.* 72(2):738–749.

Andreoni J, Harbaugh W, Vesterlund L (2003) The carrot or the stick: Rewards, punishments, and cooperation. *Amer. Econom. Rev.* 93(3):893–902.

Aperjis C, Johari R (2010) Optimal windows for aggregating ratings in electronic marketplaces. *Management Sci.* 56(5):864–880.

Archak N, Ghose A, Ipeirotis PG (2011) Deriving the pricing power of product features by mining consumer reviews. *Management Sci.* 57(8):1485–1509.

Ariely D, Bracha A, Meier S (2009) Doing good or doing well? Image motivation and monetary incentives in behaving prosocially. *Amer. Econom. Rev.* 99(1):544–555.

Avery C, Resnick P, Zeckhauser R (1999) The market for evaluations. *Amer. Econom. Rev.* 89(3):564–584.

Ba S, Whinston AB, Zhang H (2003) Building trust in online auction markets through an economic incentive mechanism. *Decision Support Systems* 35(3):273–286.

Bajari P, Hortacsu A (2004) Economic insights from Internet auctions. *J. Econom. Literature* 42:457–486.

Bénabou R, Tirole J (2006) Incentives and prosocial behavior. *Amer. Econom. Rev.* 96(5):1652–1678.

Blount S (1995) When social outcomes aren't fair: The effect of causal attributions on preferences. *Organ. Behav. Human Decision Process* 63(2):131–144.

Bolton GE, Ockenfels A (2009) The limits of trust. Cook K, Snijders C, Buskens V, eds. *eTrust* (Russell Sage, New York), 15–36.

Bolton GE, Greiner B, Ockenfels A (2013) Engineering trust—Reciprocity in the production of reputation information. *Management Sci.* 59(2):265–285.

Bolton GE, Katok E, Ockenfels A (2004) How effective are electronic reputation mechanisms? An experimental investigation. *Management Sci.* 50(11):1587–1602.

Brandts J, Figueras N (2003) An exploration of reputation formation in experimental games. *J. Econom. Behav. Organ.* 50(1):89–115.

Brown J, Morgan J (2006) Reputation in online markets: The market for trust. *California Management Rev.* 49(1):61–81.

Cabral LMB, Hortacsu A (2010) The dynamics of seller reputation: Theory and evidence from eBay. *J. Indust. Econom.* 58(1):54–78.

Cai H, Jin G, Liu C, Zhou L (2013) More trusting, less trust? An investigation of early e-commerce in China. NBER Working Paper 18961, National Bureau of Economic Research, Cambridge, MA.

Chen Y, Harper M, Konstan J, Li SX (2010) Social comparisons and contributions to online communities: A field experiment on MovieLens. *Amer. Econom. Rev.* 100(4):1358–1398.

Chwelos P, Dhar T (2007) Differences in "truthiness" across online reputation mechanisms. Working paper, University of British Columbia, Vancouver.

Dellarocas C (2003a) The digitization of word of mouth: Promise and challenges of online feedback mechanisms. *Management Sci.* 49(10):1407–1424.

Dellarocas C (2003b) Efficiency through feedback-contigent fees and rewards in auction marketplaces with adverse selection and moral hazard. *Proc. 4th ACM Conf. Electronic Commerce* (Association for Computing Machinery, New York), 11–18.

Dellarocas C, Wood CA (2008) The sound of silence in online feedback: Estimating trading risks in the presence of reporting bias. *Management Sci.* 54(3):460–476.

Dewan S, Hsu V (2004) Adverse selection in electronic markets: Evidence from online stamp auctions. *J. Indust. Econom.* 52(4): 497–516.

de Quervain DJ-F, Fischbacher U, Treyer V, Schellhammer M, Schnyder U, Buck A, Fehr E (2004) The neural basis of altruistic punishment. *Science* 305(5688):1254–1258.

Fehr E, Gächter S (2000a) Cooperation and punishment in public goods experiments. *Amer. Econom. Rev.* 90(4):980–994.

Fehr E, Gächter S (2000b) Fairness and retaliation: The economics of reciprocity. *J. Econom. Perspect.* 14(3):159–181.

Fehr E, Brown M, Zehnder C (2009) On reputation: A microfoundation of contract enforcement and price rigidity. *Econom. J.* 119(536):333–353.

Fischbacher U (2007) *z*-tree: Zurich toolbox for ready-made economic experiments. *Experiment. Econom.* 10(2):171–178.

Friedman E, Resnick P (2001) The social cost of cheap pseudonyms. *J. Econom. Management Strategy* 10(1):173–199.

Gazzale RS, Khopkar T (2011) Remain silent and ye shall suffer: Seller exploitation of reticent buyers in an experimental reputation system. *Experiment. Econom.* 14(2):273–285.

Houser D, Wooders J (2006) Reputation in auctions: Theory and evidence from eBay. *J. Econom. Management Strategy* 15(2):353–369.

RIGHTSLINK

Houser D, Xiao E (2010) Inequality seeking punishment. *Econom. Lett.* 109(1):20–23.

Hu N, Zhang J, Pavlou PA (2009) Overcoming the J-shaped distribution of product reviews. *Comm. ACM* 52(10):144–147.

Jin G, Kato A (2006) Price, quality and reputation: Evidence from an online field experiment. *RAND J. Econom.* 37(4):983–1004.

Jurca R, Faltings B (2007) Collusion resistant, incentive compatible feedback payments. *Proc. 8th ACM Conf. Electronic Commerce* (Association for Computing Machinery, New York), 200–209.

Keysar B, Converse BA, Wang J, Epley N (2008) Reciprocity is not give and take: Asymmetric reciprocity to positive and negative acts. *Psych. Sci.* 19(12):1280–1286.

Lafky JM (2011) Why do people write reviews? Theory and evidence on online ratings. *Three Essays on Online Ratings and Auction Theory* (Biblio Bazaar, Charleston, SC).

Li L(I) (2010a) Reputation, trust, and rebates: How online auction markets can improve their feedback mechanisms. *J. Econom. Management Strategy* 19(2):303–331.

Li L(I) (2010b) What is the cost of venting? Evidence from eBay. *Econom. Lett.* 108(2010):215–218.

Masclet D, Pénard T (2012) Do reputation feedback systems really improve trust among anonymous traders? An experimental study. *Appl. Econom.* 44(35):4553–4573.

Miller N, Resnick P, Zeckhauser R (2005) Eliciting honest feedback: The peer prediction method. *Management Sci.* 51(9): 1359–1373.

Nikiforakis N (2008) Punishment and counter-punishment in public good games: Can we really govern ourselves? *J. Public Econom.* 92(1):91–112.

Offerman T (2002) Hurting hurts more than helping helps. *Eur. Econom. Rev.* 46(8):1423–1437.

Resnick P, Zeckhauser R (2002) Trust among strangers in Internet transactions: Empirical analysis of eBay's reputation system. *Adv. Appl. Microeconomics* 11:127–157.

Resnick P, Zeckhauser R, Swanson J, Lockwood L (2006) The value of reputation on eBay: A controlled experiment. *Experiment. Econom.* 9:79–101.

Shapiro C (1983) Premiums for high quality products as returns to reputations. *Quart. J. Econom.* 98(4):659–680.

Sobel J (2009) Signaling games. Meyers R, ed. *Encyclopedia of Complexity and Systems Science* (Springer, New York), 8125–8139.

Xiao E, Houser D (2005) Emotion expression in human punishment behavior. *Proc. Natl. Acad. Sci. USA* 102(20):7398–7401.

Yamagishi T, Matsuda M (2002) Improving the lemons' market with a reputation system: An experimental study of Internet auctioning. Working paper, Hokkaido University, Hokkaido, Japan.

Downloaded from informs.org by [155.246.103.35] on 06 April 2017, at 06:20 . For personal use only, all rights reserved.