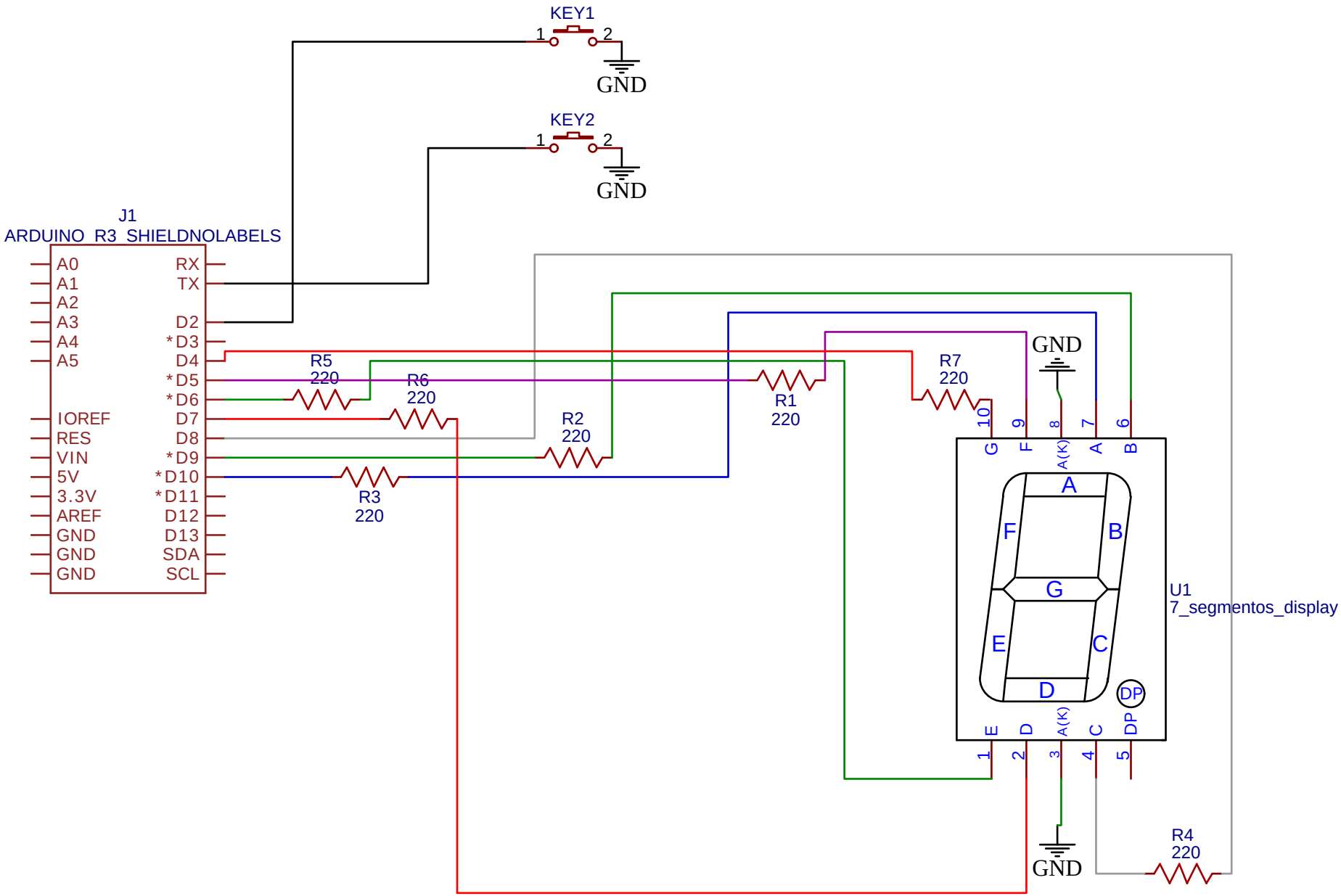

TITLE: Esquem á tico TP2		REV: 1.0
EasyEDA	Company: Vero	Sheet: 1/1
	Date: 2021-05-22 Drawn By: Ver ó nica	