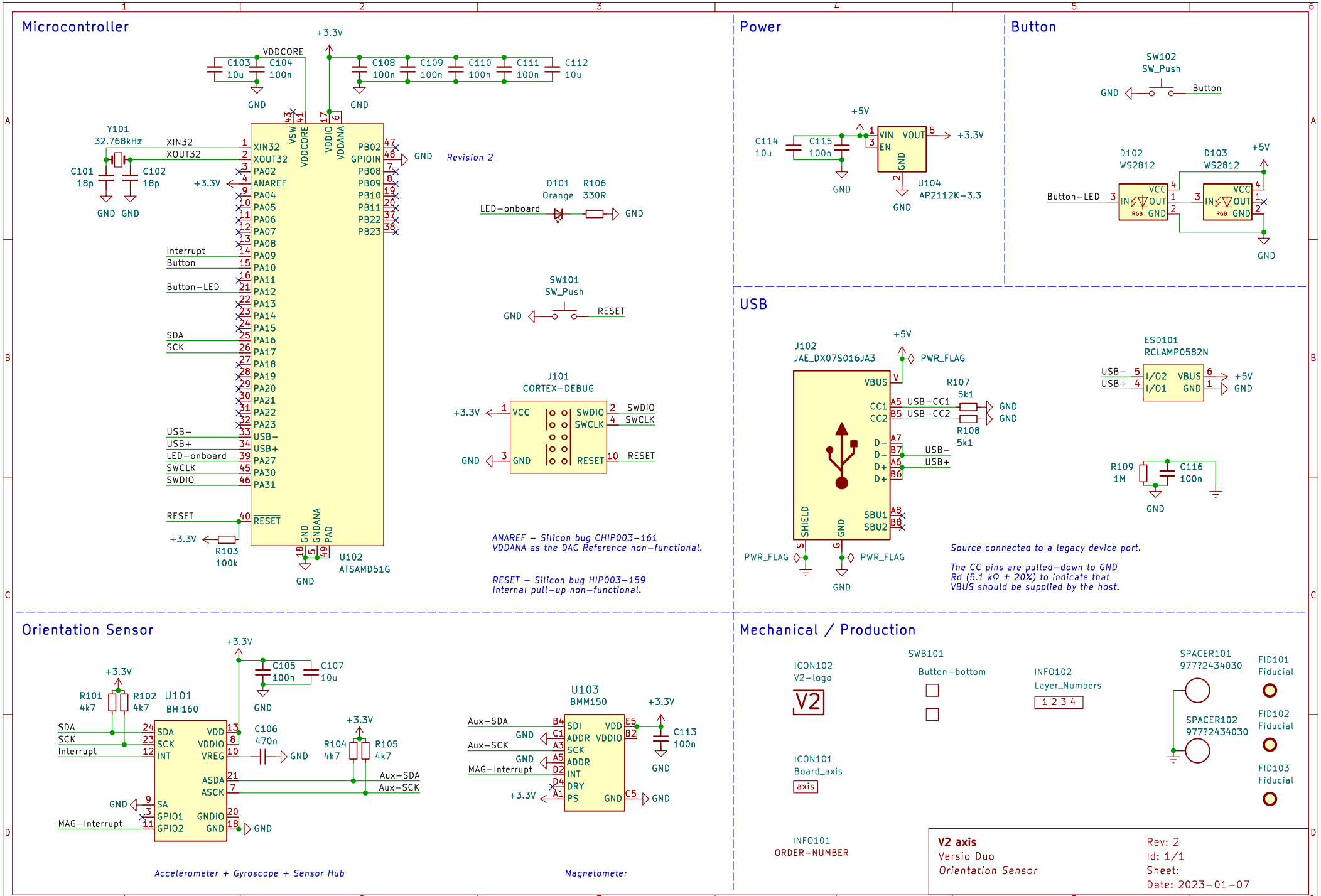
Microcontroller
VDDCORE
+3.3V
C103 10u
C104 100n
C108 100n
C109 100n
C110 100n
C111 100n
C112 10u
GND
Y101 32.768kHz
C101 18p
C102 18p
XIN32
XOUT32
+3.3V
Revision 2
D101 Orange
R106 330R
LED-onboard
SW101 SW_Push
RESET
Interrupt
Button
Button-LED
SDA
SCK
USB-
USB+
LED-onboard
SWCLK
SWDIO
RESET
R103 100k
U102 ATSAMD51G
J101 CORTEX-DEBUG
VCC
SWDIO
SWCLK
RESET
ANAREF – Silicon bug CHIP003-161
VDDANA as the DAC Reference non-functional.
RESET – Silicon bug HIP003-159
Internal pull-up non-functional.
Power
+5V
C114 10u
C115 100n
VIN
VOUT
EN
GND
U104 AP2112K-3.3
Button
SW102 SW_Push
Button
D102 WS2812
D103 WS2812
Button-LED
VCC
IN
OUT
RGB
USB
J102 JAE_DX07S016JA3
PWR_FLAG
VBUS
CC1
CC2
R107 5k1
R108 5k1
USB-CC1
USB-CC2
D-
D+
USB-
USB+
SHIELD
SBU1
SBU2
Source connected to a legacy device port.
The CC pins are pulled-down to GND
Rd (5.1 kΩ ± 20%) to indicate that
VBUS should be supplied by the host.
ESD101 RCLAMP0582N
I/O2
I/O1
R109 1M
C116 100n
Orientation Sensor
R101 4k7
R102 4k7
U101 BHI160
C105 100n
C107 10u
C106 470n
R104 4k7
R105 4k7
SDA
SCK
Interrupt
MAG-Interrupt
Aux-SDA
Aux-SCK
U103 BMM150
SDI
ADDR
SCK
INT
DRY
PS
VDD
VDDIO
C113 100n
Accelerometer + Gyroscope + Sensor Hub
Magnetometer
Mechanical / Production
ICON102 V2-logo
V2
SWB101 Button-bottom
INFO102 Layer_Numbers
1 2 3 4
SPACER101 9777?2434030
SPACER102 9777?2434030
FID101 Fiducial
FID102 Fiducial
FID103 Fiducial
ICON101 Board_axis
axis
INFO101 ORDER-NUMBER
V2 axis
Versio Duo
Orientation Sensor
Rev: 2
Id: 1/1
Sheet:
Date: 2023-01-07