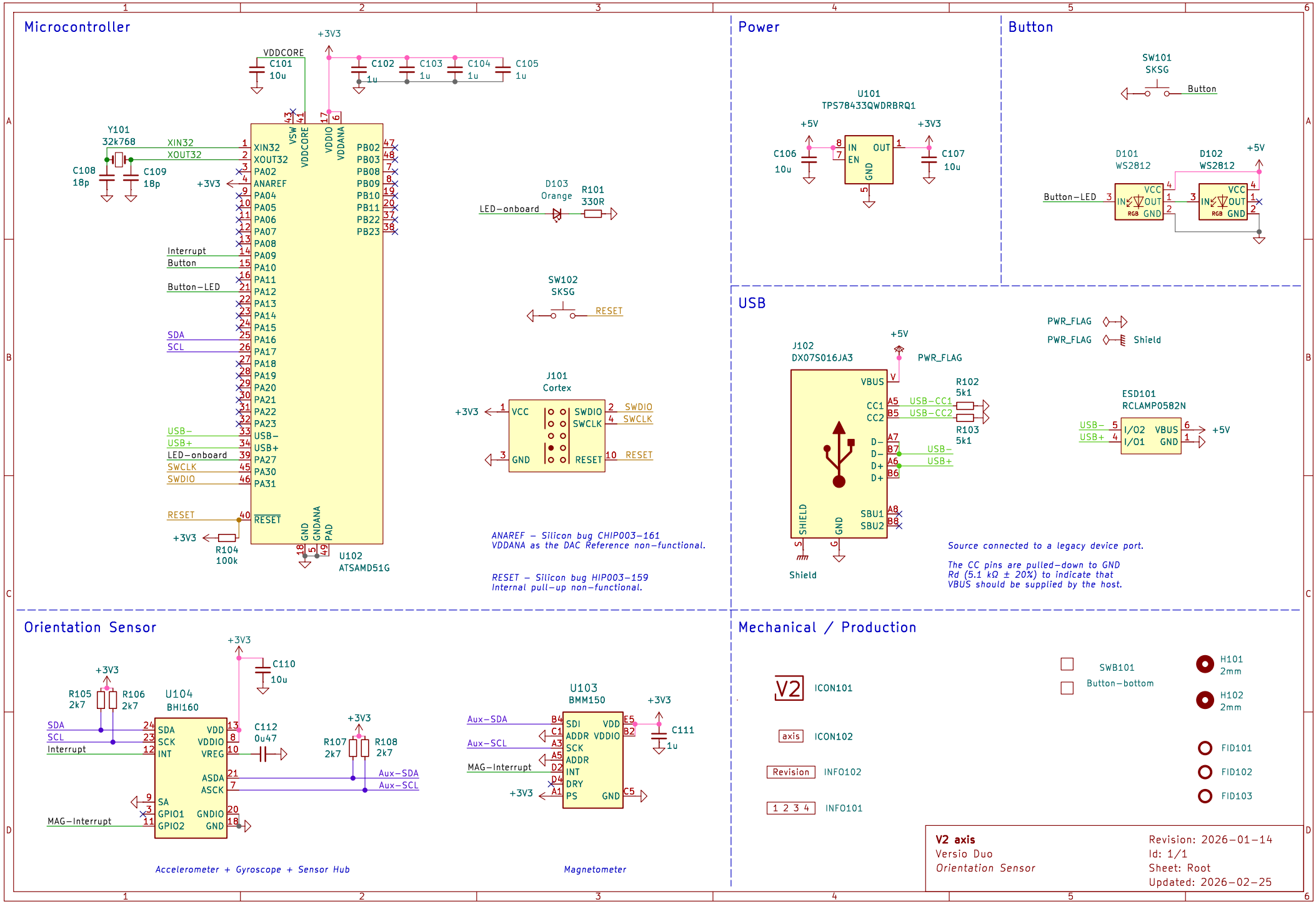
Microcontroller
+3V3
VDDCORE
C101
10u
C102
1u
C103
1u
C104
1u
C105
1u
Y101
32k768
C108
18p
C109
18p
XIN32
XOUT32
+3V3
Interrupt
Button
Button-LED
SDA
SCL
USB-
USB+
LED-onboard
SWCLK
SWDIO
RESET
+3V3
R104
100k
U102
ATSAMD51G
D103
Orange
R101
330R
LED-onboard
SW102
SKSG
RESET
J101
Cortex
+3V3
VCC
GND
SWDIO
SWCLK
RESET
ANAREF – Silicon bug CHIP003-161
VDDANA as the DAC Reference non-functional.
RESET – Silicon bug HIP003-159
Internal pull-up non-functional.
Power
U101
TPS78433QWDRBRQ1
+5V
+3V3
C106
10u
C107
10u
IN
EN
OUT
GND
Button
SW101
SKSG
Button
D101
WS2812
D102
WS2812
+5V
Button-LED
VCC
IN
OUT
GND
RGB
USB
J102
DX07S016JA3
+5V
PWR_FLAG
VBUS
CC1
CC2
D-
D+
SHIELD
GND
SBU1
SBU2
R102
5k1
R103
5k1
USB-CC1
USB-CC2
USB-
USB+
Shield
PWR_FLAG
PWR_FLAG
Shield
ESD101
RCLAMP0582N
USB-
USB+
I/O2
I/O1
VBUS
GND
+5V
Source connected to a legacy device port.
The CC pins are pulled-down to GND
Rd (5.1 kΩ ± 20%) to indicate that
VBUS should be supplied by the host.
Orientation Sensor
+3V3
C110
10u
R105
2k7
R106
2k7
U104
BHI160
SDA
SCL
Interrupt
MAG-Interrupt
VDD
VDDIO
VREG
ASDA
ASCK
SA
GPIO1
GPIO2
GNDIO
GND
C112
0u47
R107
2k7
R108
2k7
Aux-SDA
Aux-SCL
Accelerometer + Gyroscope + Sensor Hub
U103
BMM150
Aux-SDA
Aux-SCL
MAG-Interrupt
SDI
ADDR
SCK
ADDR
INT
DRY
PS
VDD
VDDIO
GND
C111
1u
Magnetometer
Mechanical / Production
V2
ICON101
axis
ICON102
Revision
INFO102
1 2 3 4
INFO101
SWB101
Button-bottom
H101
2mm
H102
2mm
FID101
FID102
FID103
V2 axis
Versio Duo
Orientation Sensor
Revision: 2026-01-14
Id: 1/1
Sheet: Root
Updated: 2026-02-25