V2 Link / PoE Mode B

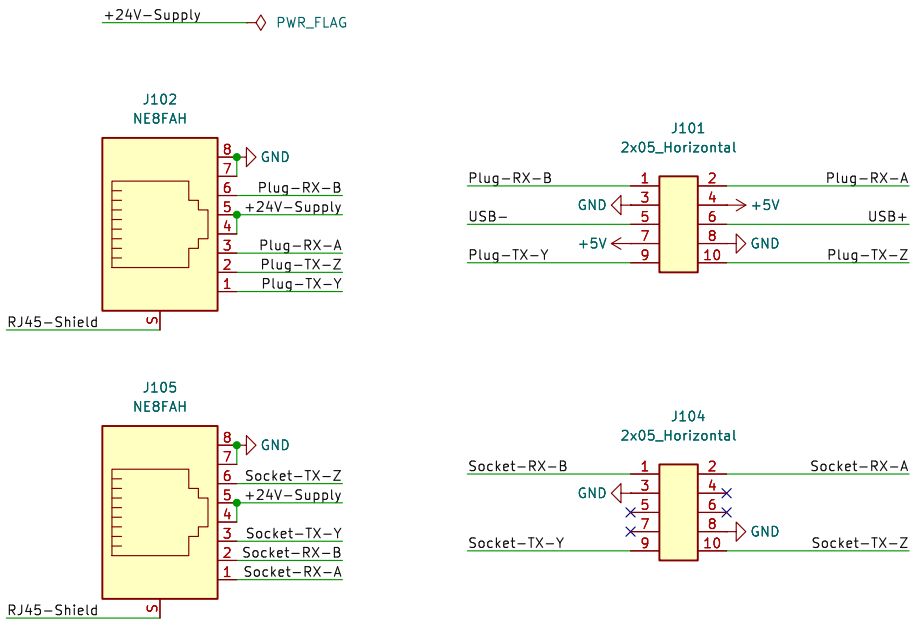

The cables connecting the device and the power adapter reverse the order of the wires. So these connectors are different from the otherwise identical connectors at the device.

USB

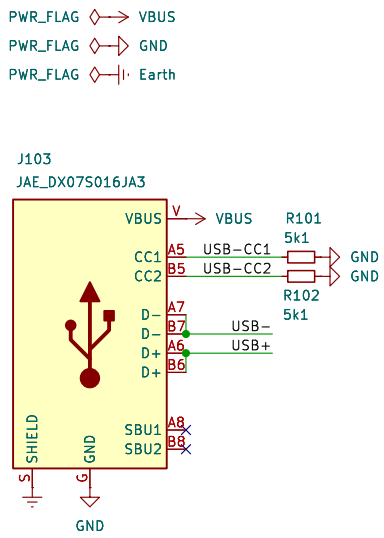

Polarity Protection / +5V Power

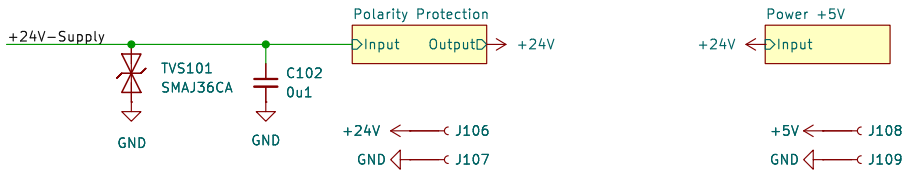

Mechanical / Production

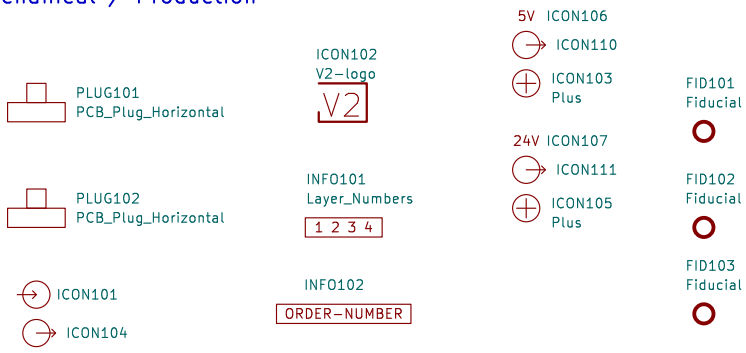

V2 connector PoE
Versio Duo
V2 Link + PoE Mode B

Rev: 5
Id: 1/3
Sheet: Root
Date: 2025-09-17

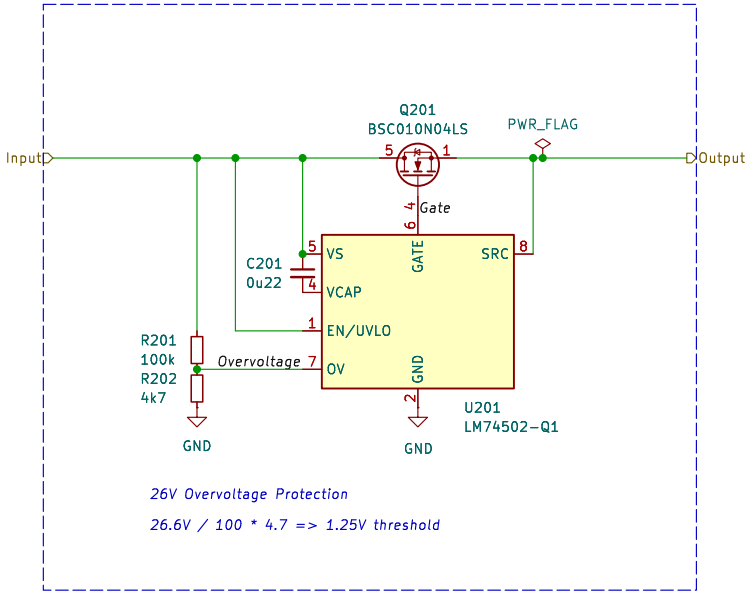

Polarity Protection
Versio Duo

Rev: 2
Id: 3/3
Sheet: Polarity Protection
Date: 2023-08-08

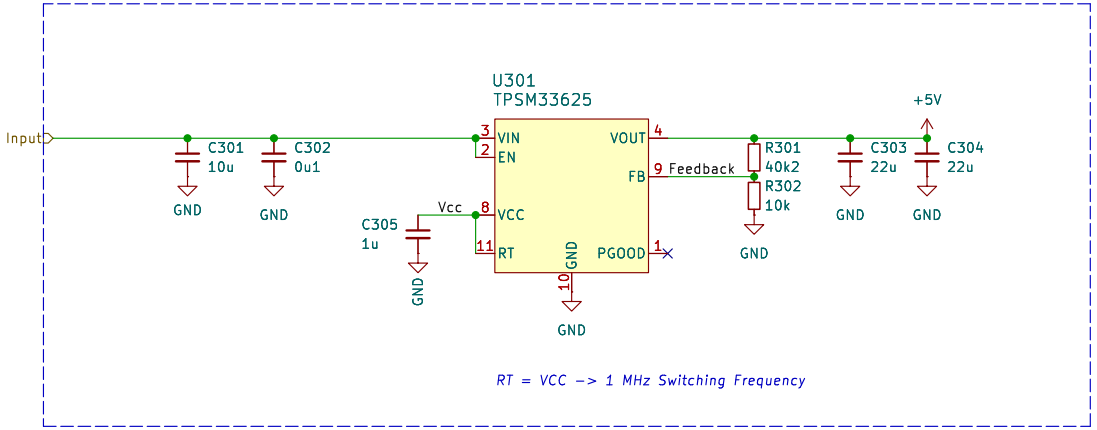

Power Supply
+5V

Rev: 4
Id: 5/3
Sheet: Power +5V
Date: 2024-03-28