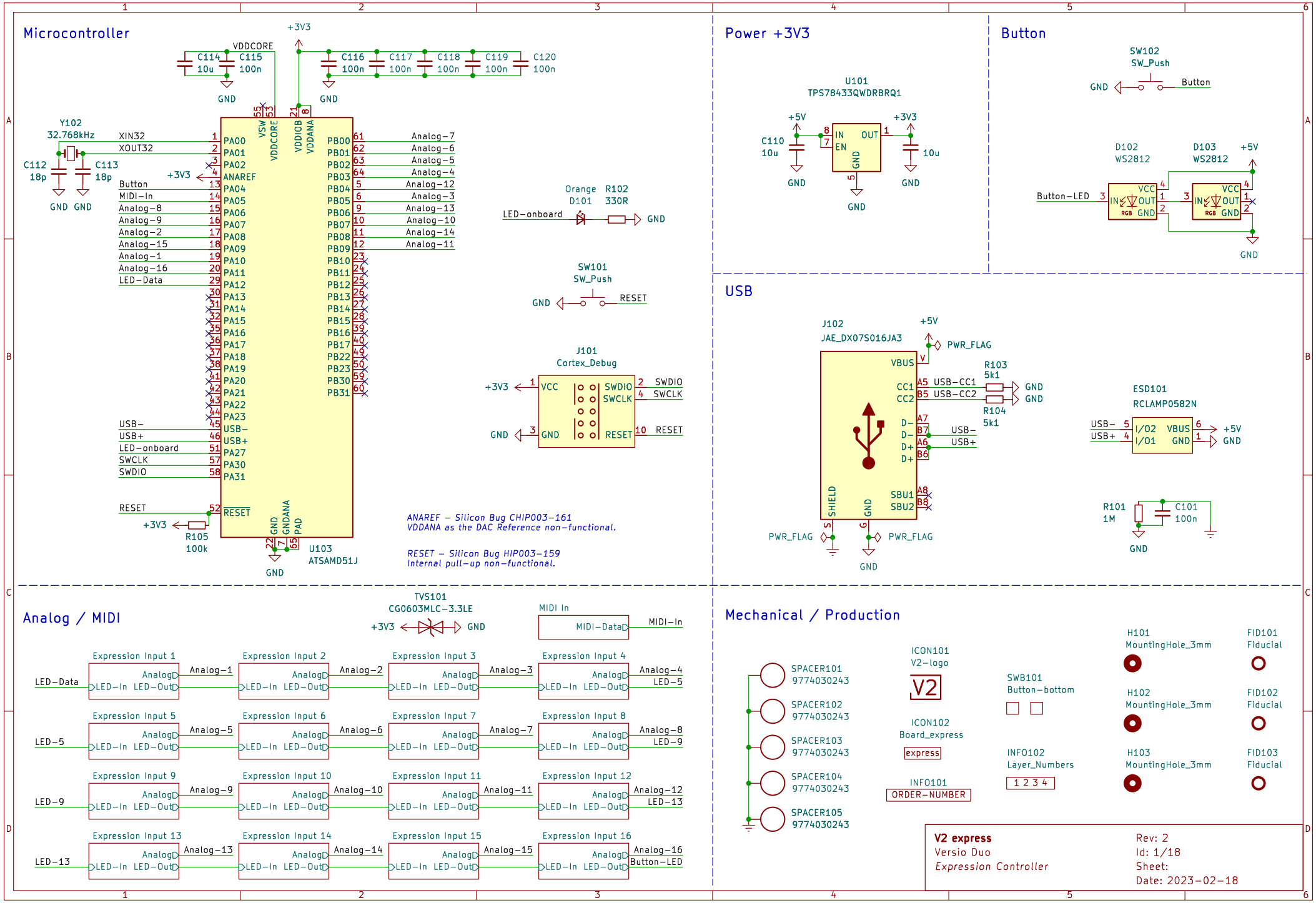
Microcontroller
Power +3V3
Button
USB
Analog / MIDI
Mechanical / Production
U103
ATSAMD51J
U101
TPS78433QWDRBRQ1
J102
JAE_DX07S016JA3
J101
Cortex_Debug
ESD101
RCLAMP0582N
TVS101
CG0603MLC-3.3LE
MIDI In
SW101
SW_Push
SW102
SW_Push
D102
WS2812
D103
WS2812
Y102
32.768kHz
ANAREF – Silicon Bug CHIP003-161
VDDANA as the DAC Reference non-functional.
RESET – Silicon Bug HIP003-159
Internal pull-up non-functional.
SPACER101
9774030243
SPACER102
9774030243
SPACER103
9774030243
SPACER104
9774030243
SPACER105
9774030243
ICON101
V2-logo
ICON102
Board_express
INFO101
ORDER-NUMBER
SWB101
Button-bottom
INFO102
Layer_Numbers
H101
MountingHole_3mm
H102
MountingHole_3mm
H103
MountingHole_3mm
FID101
Fiducial
FID102
Fiducial
FID103
Fiducial
V2 express
Versio Duo
Expression Controller
Rev: 2
Id: 1/18
Sheet:
Date: 2023-02-18

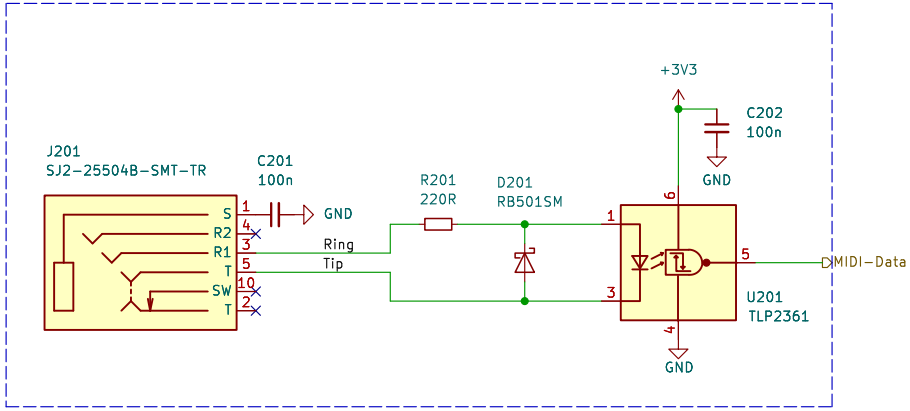

MIDI In

Rev:
Id: 2/18
Sheet: MIDI In
Date: 2023-01-07

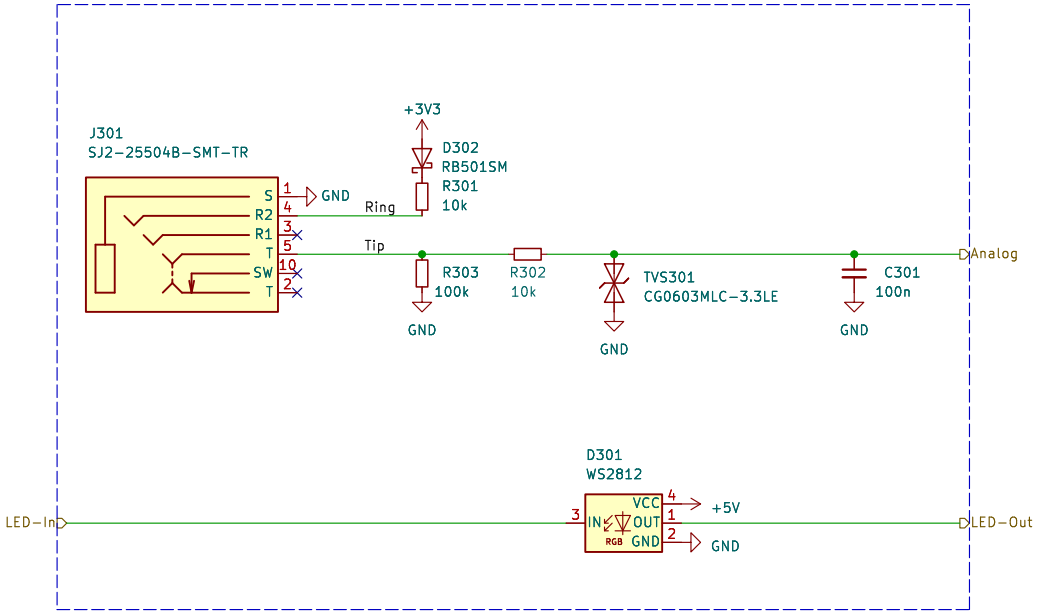

Expression Input
Versio Duo

Rev: 1
Id: 3/18
Sheet: Expression Input 1
Date: 2023-03-01

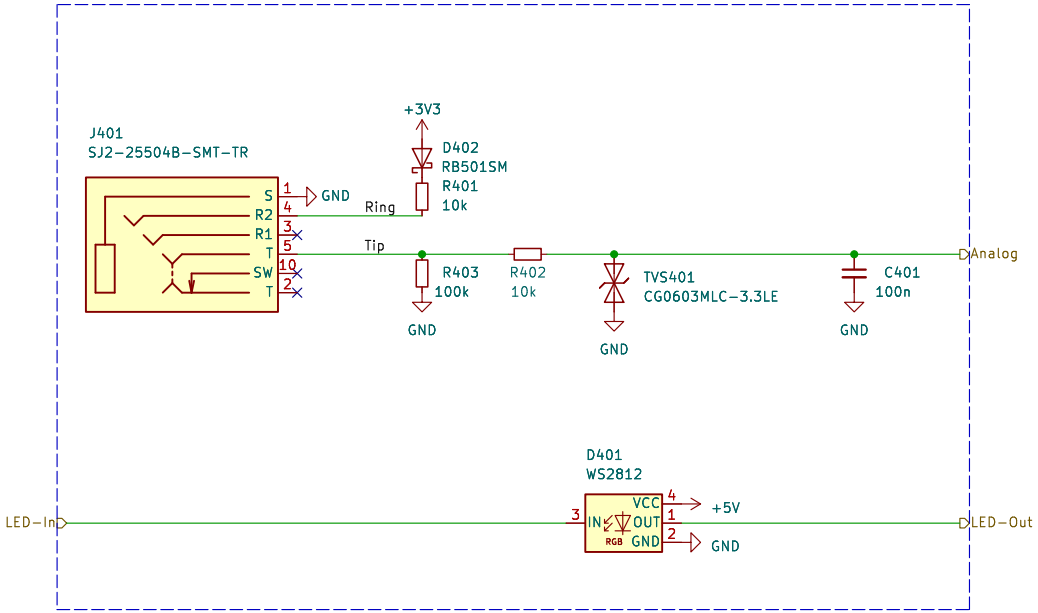

Expression Input
Versio Duo

Rev: 1
Id: 4/18
Sheet: Expression Input 2
Date: 2023-03-01

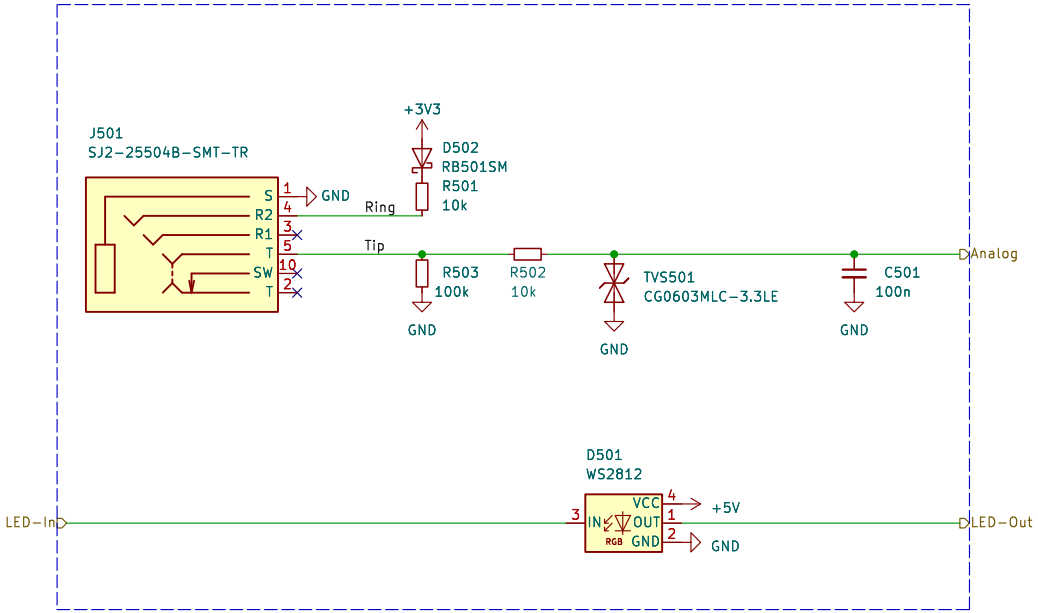

Expression Input
Versio Duo

Rev: 1
Id: 5/18
Sheet: Expression Input 3
Date: 2023-03-01

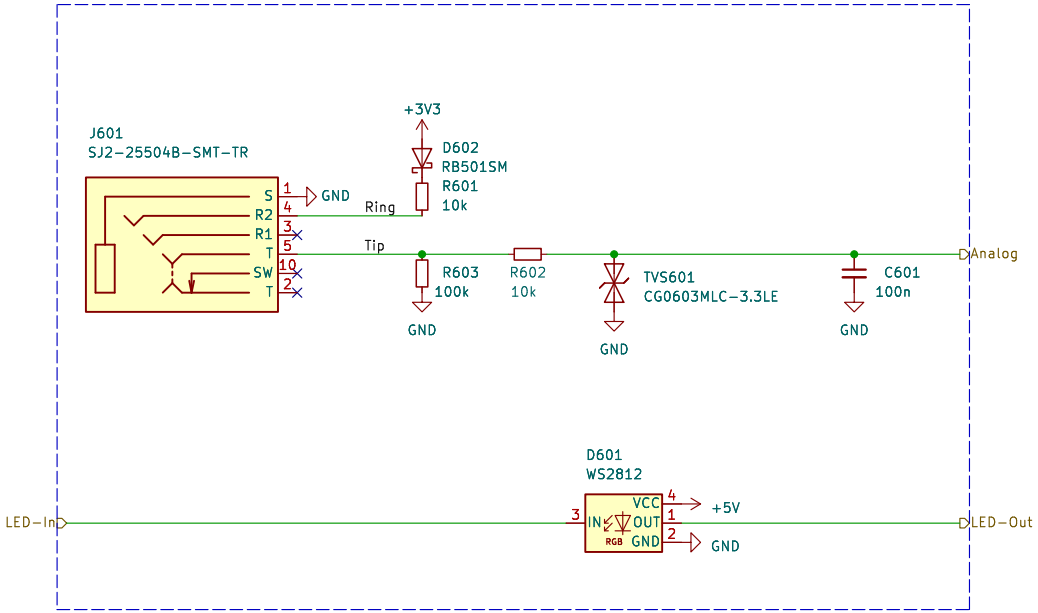

Expression Input
Versio Duo

Rev: 1
Id: 6/18
Sheet: Expression Input 4
Date: 2023-03-01

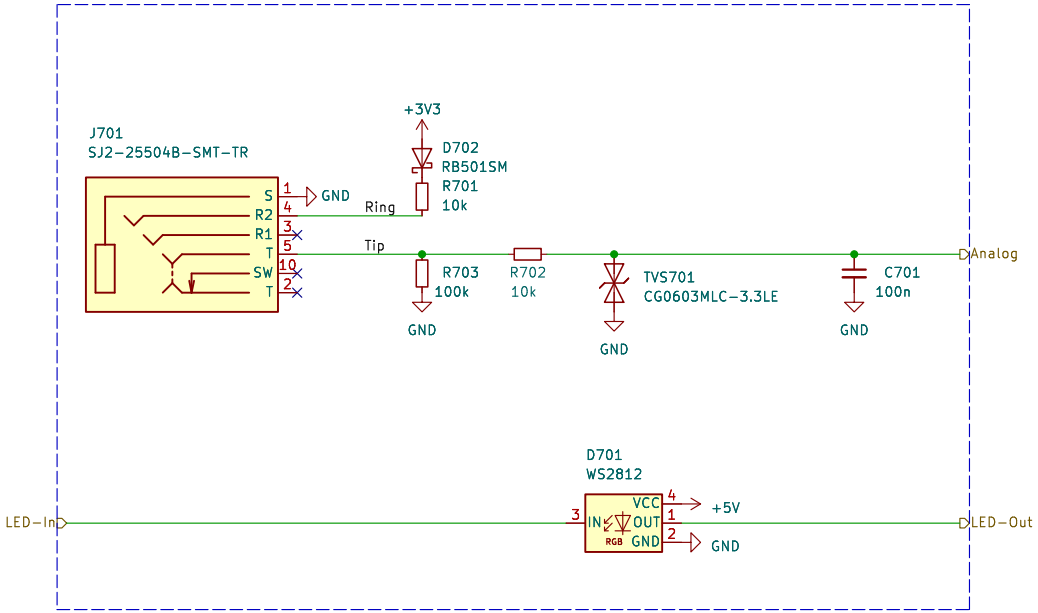

Expression Input
Versio Duo

Rev: 1
Id: 7/18
Sheet: Expression Input 5
Date: 2023-03-01

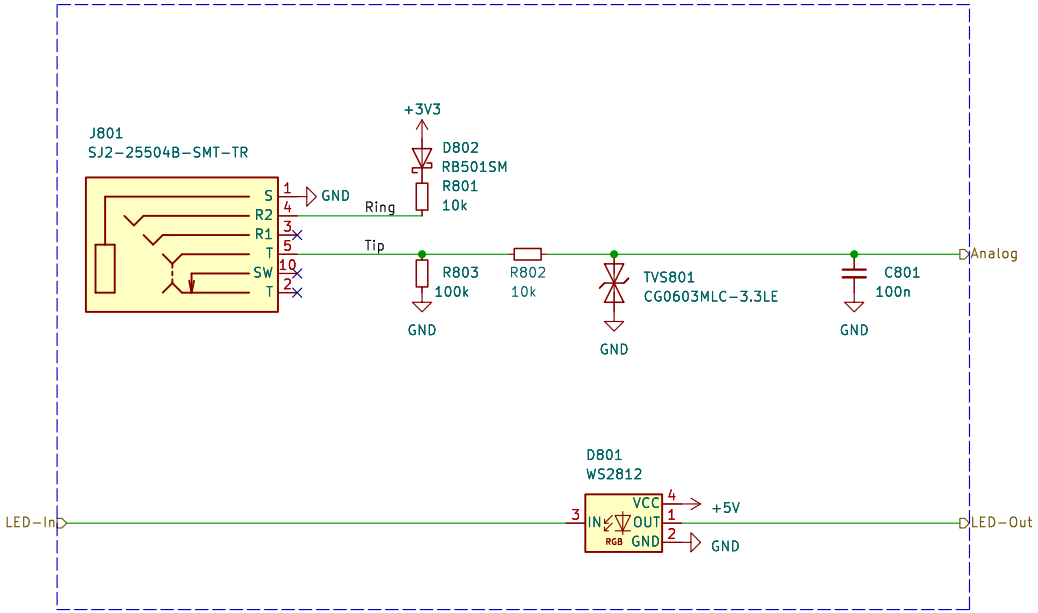

Expression Input
Versio Duo

Rev: 1
Id: 8/18
Sheet: Expression Input 6
Date: 2023-03-01

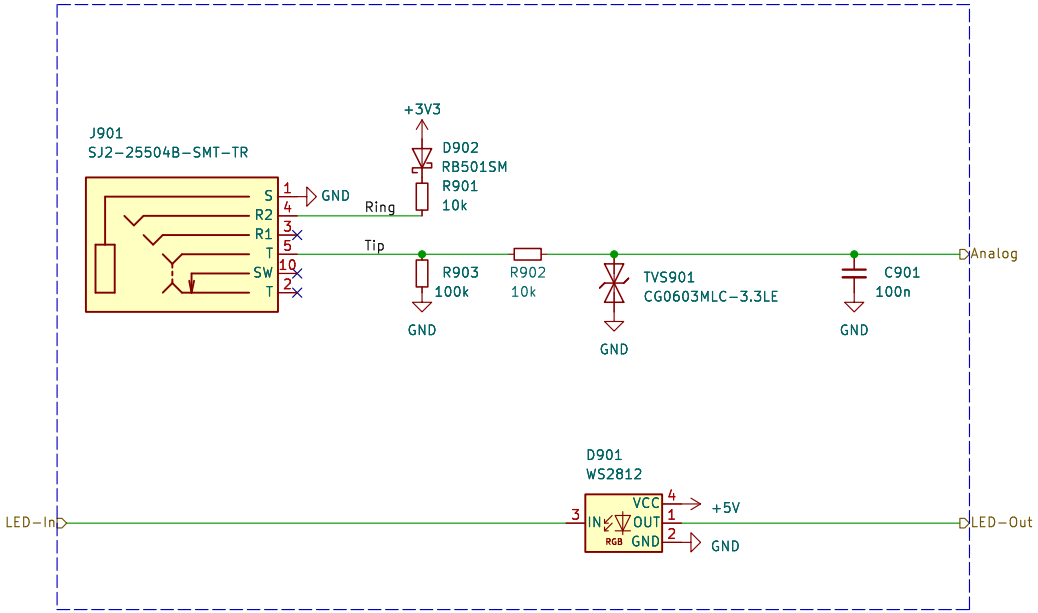

Expression Input
Versio Duo

Rev: 1
Id: 9/18
Sheet: Expression Input 7
Date: 2023-03-01

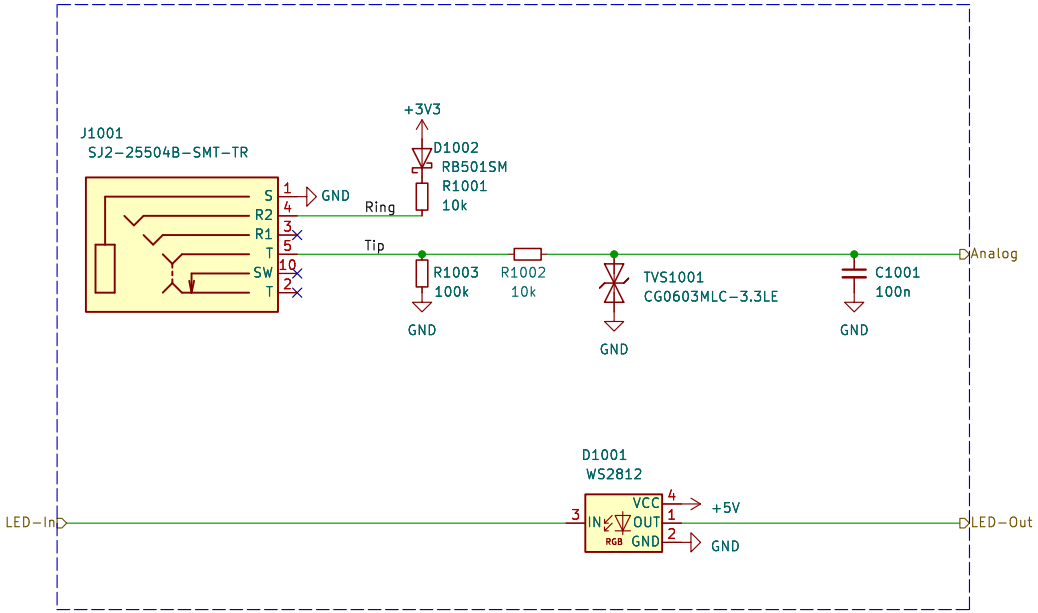

Expression Input
Versio Duo

Rev: 1
Id: 10/18
Sheet: Expression Input 8
Date: 2023-03-01

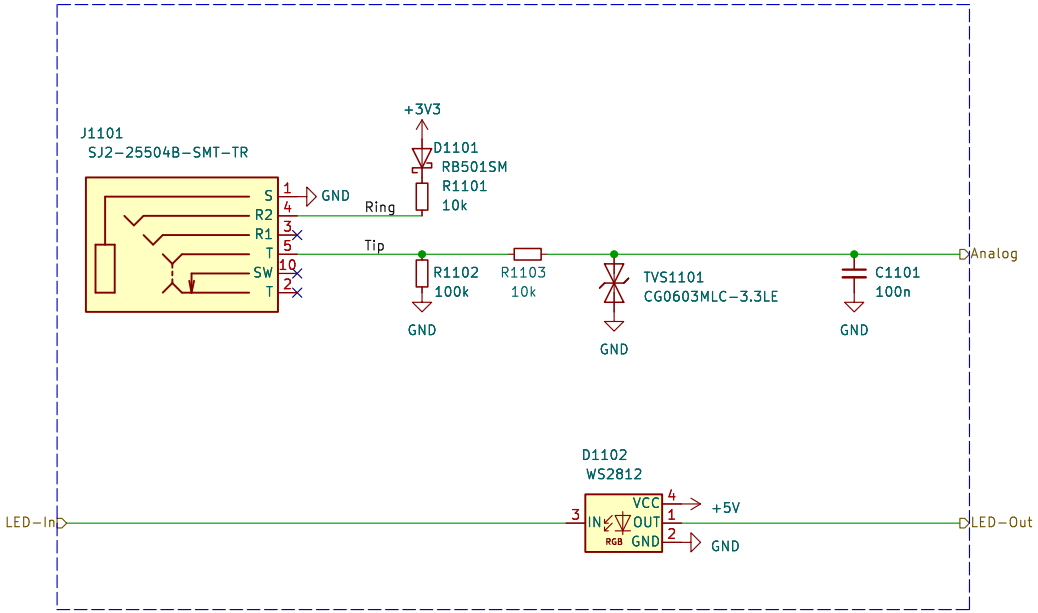

Expression Input
Versio Duo

Rev: 1
Id: 11/18
Sheet: Expression Input 9
Date: 2023-03-01

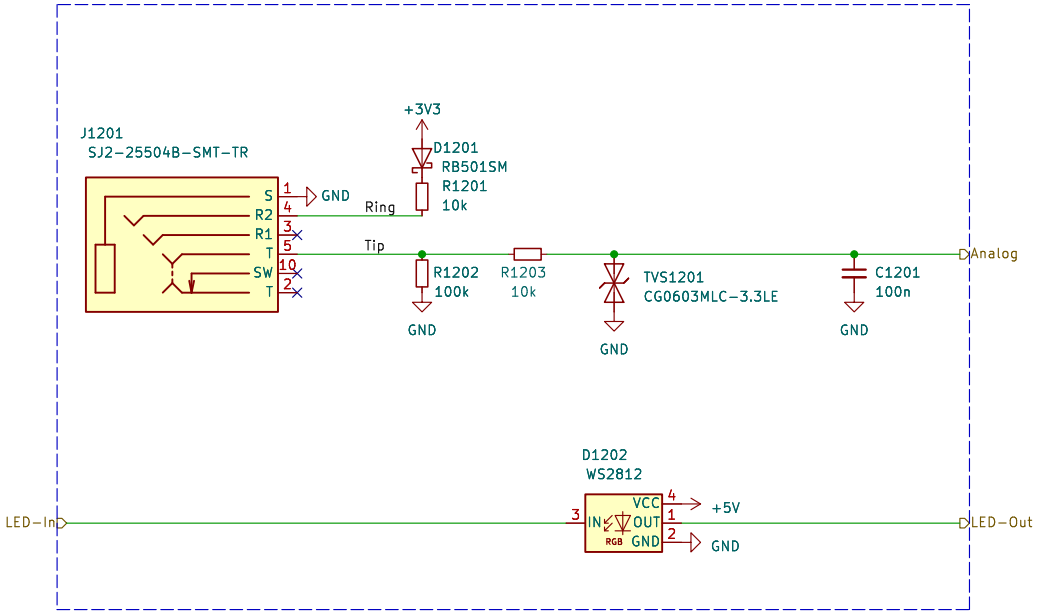

Expression Input
Versio Duo

Rev: 1
Id: 12/18
Sheet: Expression Input 10
Date: 2023-03-01

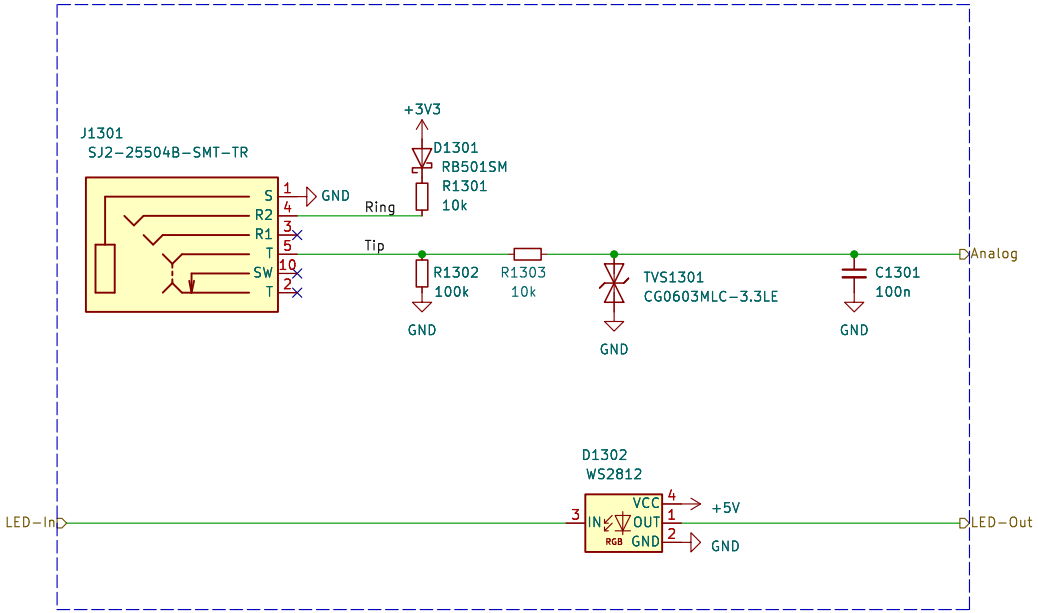

Expression Input
Versio Duo

Rev: 1
Id: 13/18
Sheet: Expression Input 11
Date: 2023-03-01

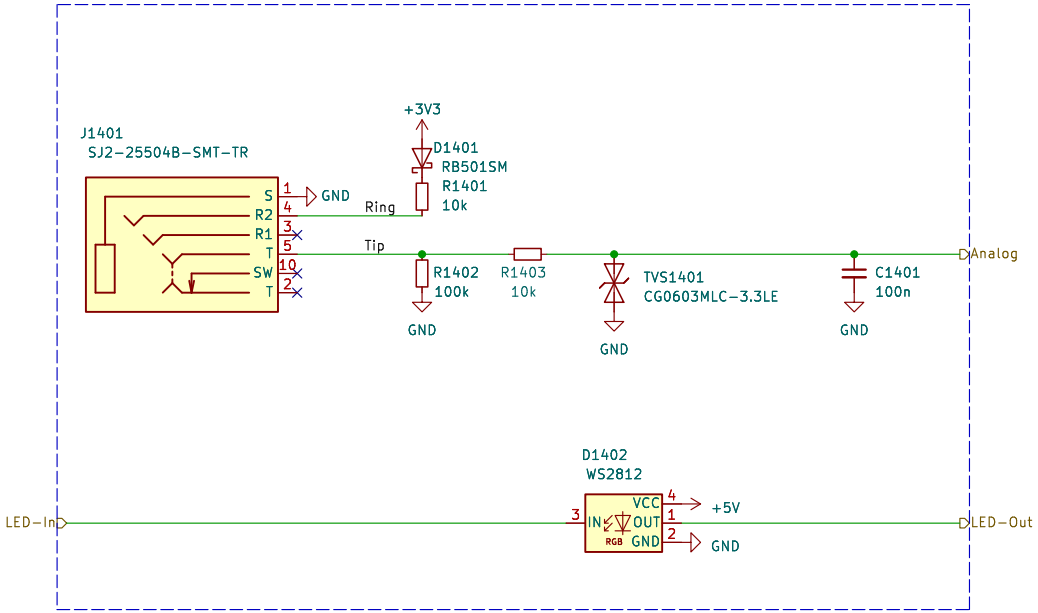

Expression Input
Versio Duo

Rev: 1
Id: 14/18
Sheet: Expression Input 12
Date: 2023-03-01

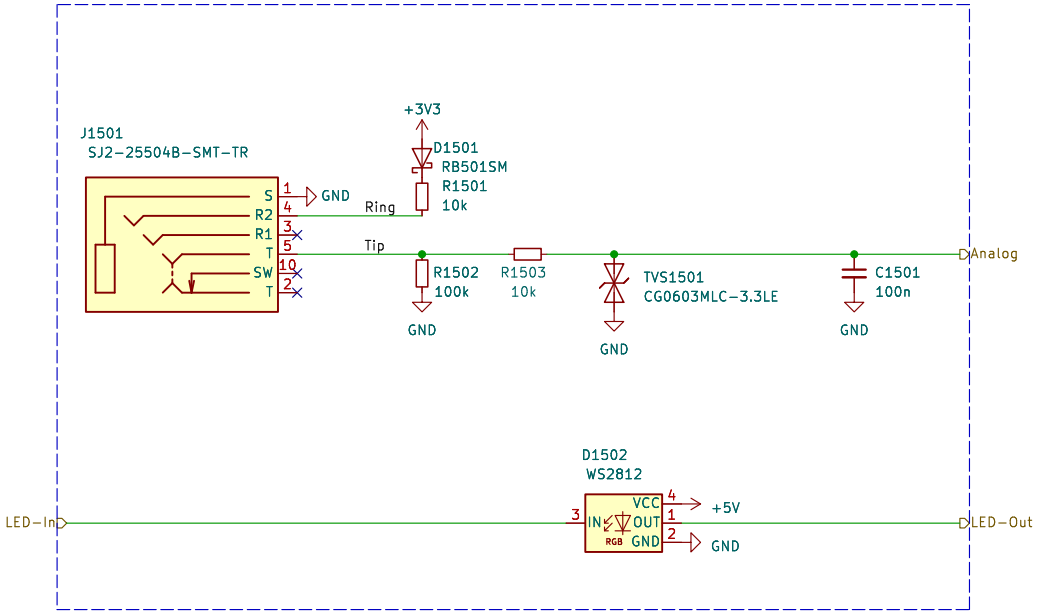

Expression Input
Versio Duo

Rev: 1
Id: 15/18
Sheet: Expression Input 13
Date: 2023-03-01

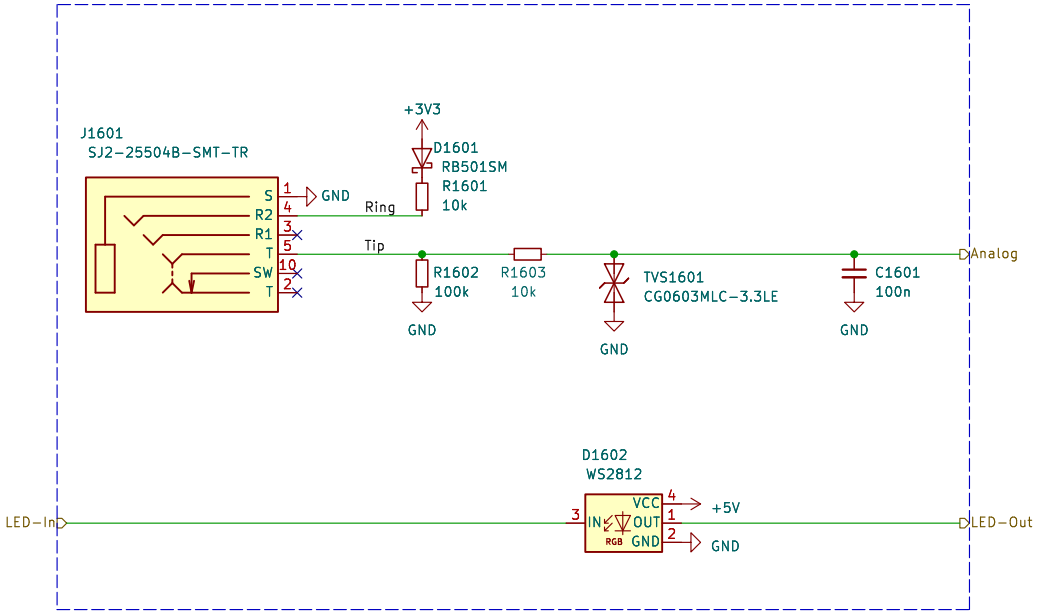

Expression Input
Versio Duo

Rev: 1
Id: 16/18
Sheet: Expression Input 14
Date: 2023-03-01

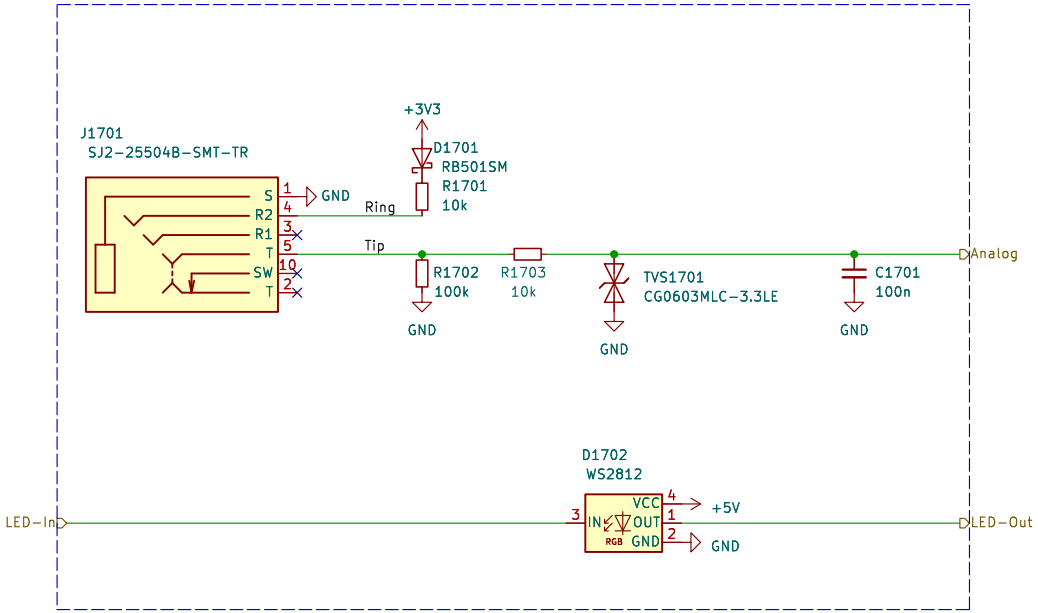

Expression Input
Versio Duo

Rev: 1
Id: 17/18
Sheet: Expression Input 15
Date: 2023-03-01

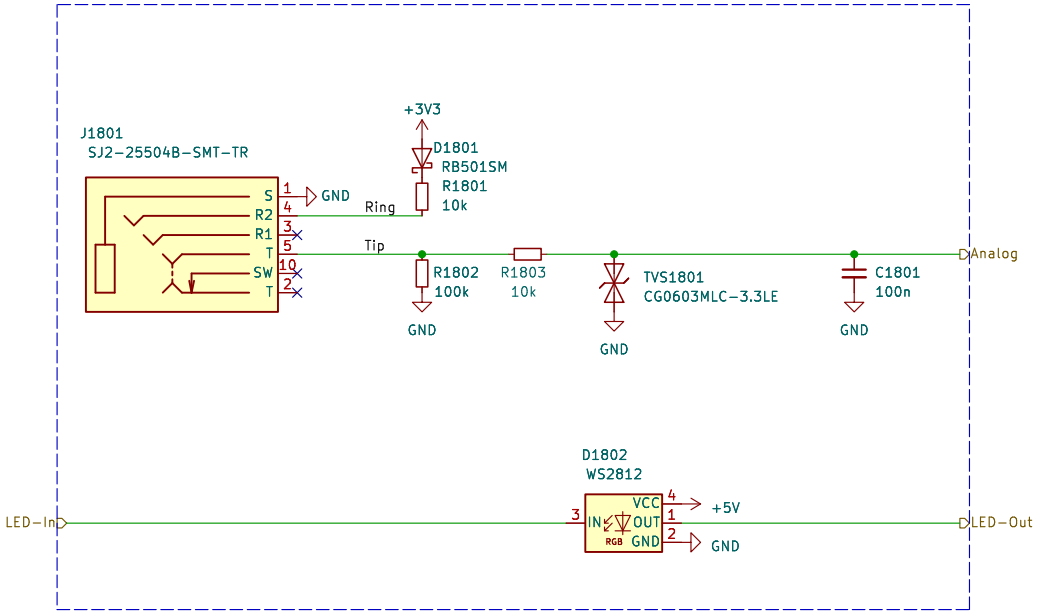

Expression Input
Versio Duo

Rev: 1
Id: 18/18
Sheet: Expression Input 16
Date: 2023-03-01