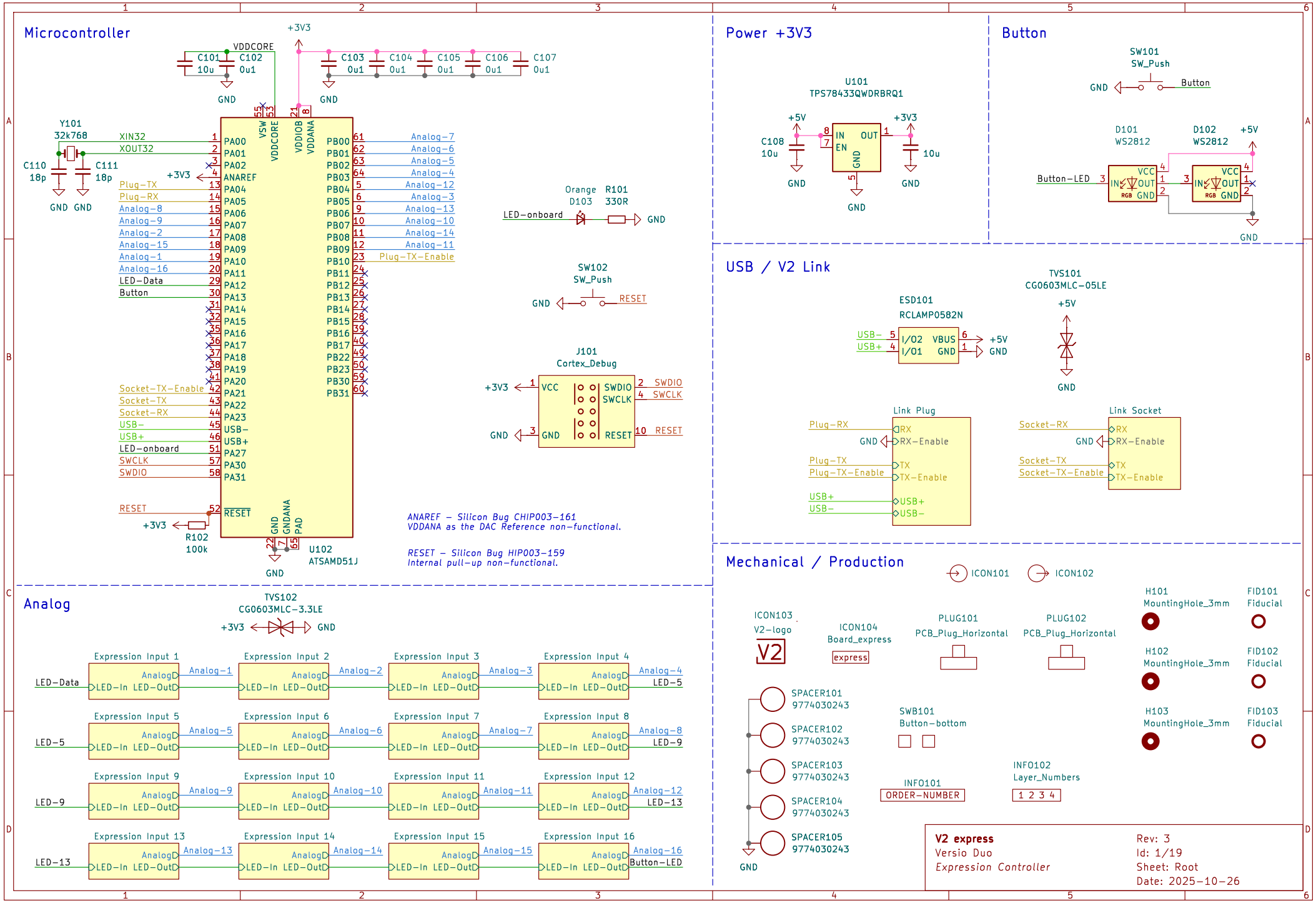
Microcontroller
VDDCORE
+3V3
C101 10u
C102 0u1
C103 0u1
C104 0u1
C105 0u1
C106 0u1
C107 0u1
GND
Y101 32k768
C110 18p
C111 18p
XIN32
XOUT32
Plug-TX
Plug-RX
Analog-8
Analog-9
Analog-2
Analog-15
Analog-1
Analog-16
LED-Data
Button
Socket-TX-Enable
Socket-TX
Socket-RX
USB-
USB+
LED-onboard
SWCLK
SWDIO
RESET
R102 100k
U102 ATSAMD51J
Analog-7
Analog-6
Analog-5
Analog-4
Analog-12
Analog-3
Analog-13
Analog-10
Analog-14
Analog-11
Plug-TX-Enable
Orange D103
R101 330R
SW102 SW_Push
J101 Cortex_Debug
VCC
GND
SWDIO
SWCLK
RESET
ANAREF - Silicon Bug CHIP003-161
VDDANA as the DAC Reference non-functional.
RESET - Silicon Bug HIP003-159
Internal pull-up non-functional.
Analog
TVS102 CG0603MLC-3.3LE
Expression Input 1
Expression Input 2
Expression Input 3
Expression Input 4
Expression Input 5
Expression Input 6
Expression Input 7
Expression Input 8
Expression Input 9
Expression Input 10
Expression Input 11
Expression Input 12
Expression Input 13
Expression Input 14
Expression Input 15
Expression Input 16
Analog
LED-In
LED-Out
LED-5
LED-9
LED-13
Button-LED
Power +3V3
U101 TPS78433QWDRBRQ1
+5V
C108 10u
IN
EN
OUT
10u
Button
SW101 SW_Push
D101 WS2812
D102 WS2812
Button-LED
VCC
OUT
GND
USB / V2 Link
ESD101 RCLAMP0582N
TVS101 CG0603MLC-05LE
USB-
USB+
I/O2
I/O1
VBUS
Link Plug
Link Socket
RX
RX-Enable
TX
TX-Enable
Plug-RX
Plug-TX
Plug-TX-Enable
Socket-RX
Socket-TX
Socket-TX-Enable
Mechanical / Production
ICON101
ICON102
ICON103 V2-logo
ICON104 Board_express
express
PLUG101 PCB_Plug_Horizontal
PLUG102 PCB_Plug_Horizontal
H101 MountingHole_3mm
H102 MountingHole_3mm
H103 MountingHole_3mm
FID101 Fiducial
FID102 Fiducial
FID103 Fiducial
SPACER101 9774030243
SPACER102 9774030243
SPACER103 9774030243
SPACER104 9774030243
SPACER105 9774030243
SWB101 Button-bottom
INFO101 ORDER-NUMBER
INFO102 Layer_Numbers
1 2 3 4
V2 express
Versio Duo
Expression Controller
Rev: 3
Id: 1/19
Sheet: Root
Date: 2025-10-26

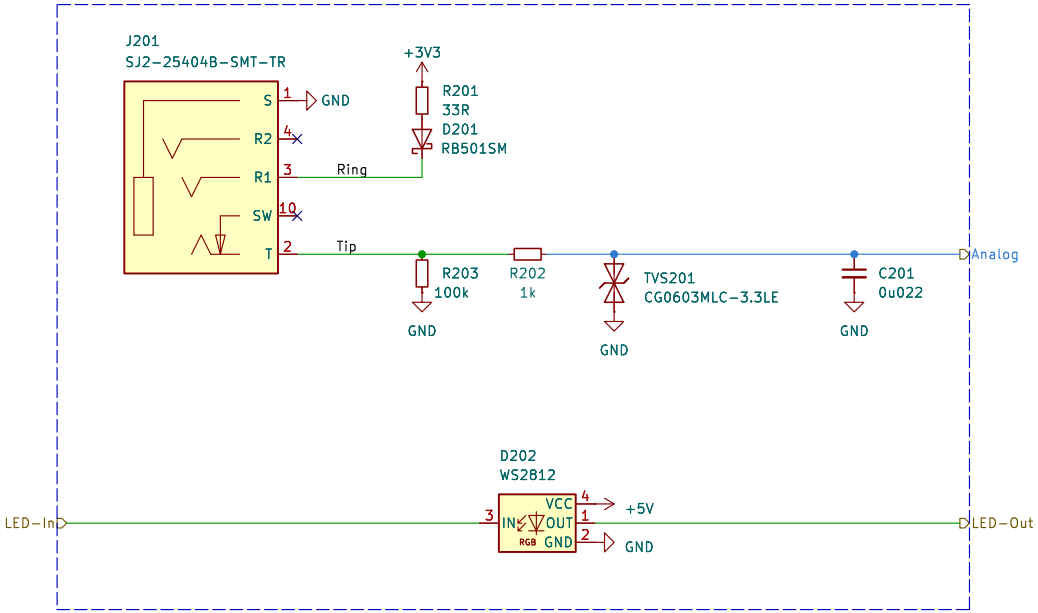

Expression Input
Versio Duo

Rev: 6
Id: 2/19
Sheet: Expression Input 1
Date: 2025-09-19

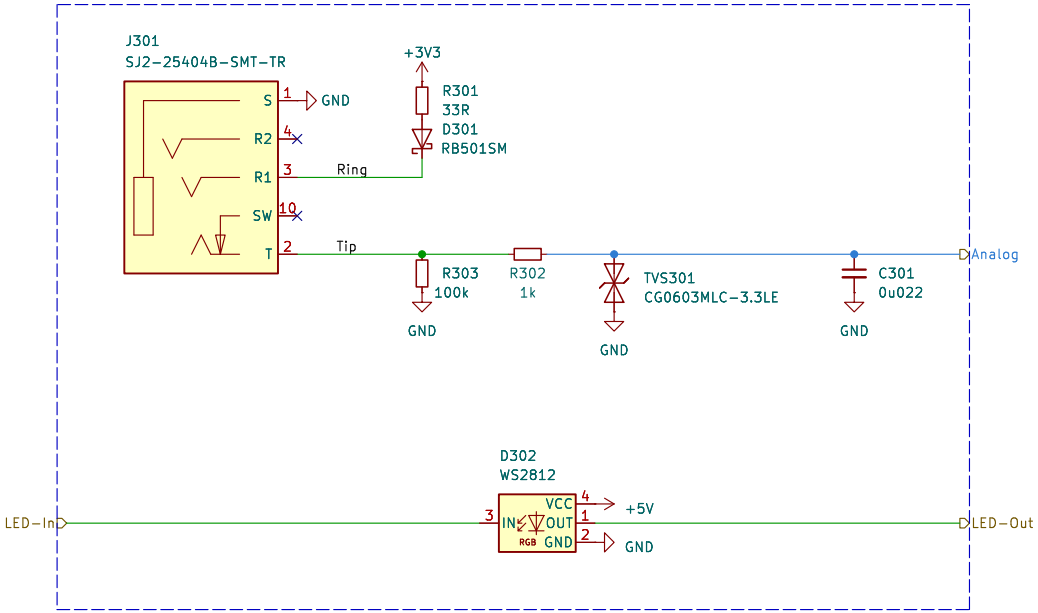

Expression Input
Versio Duo

Rev: 6
Id: 3/19
Sheet: Expression Input 2
Date: 2025-09-19

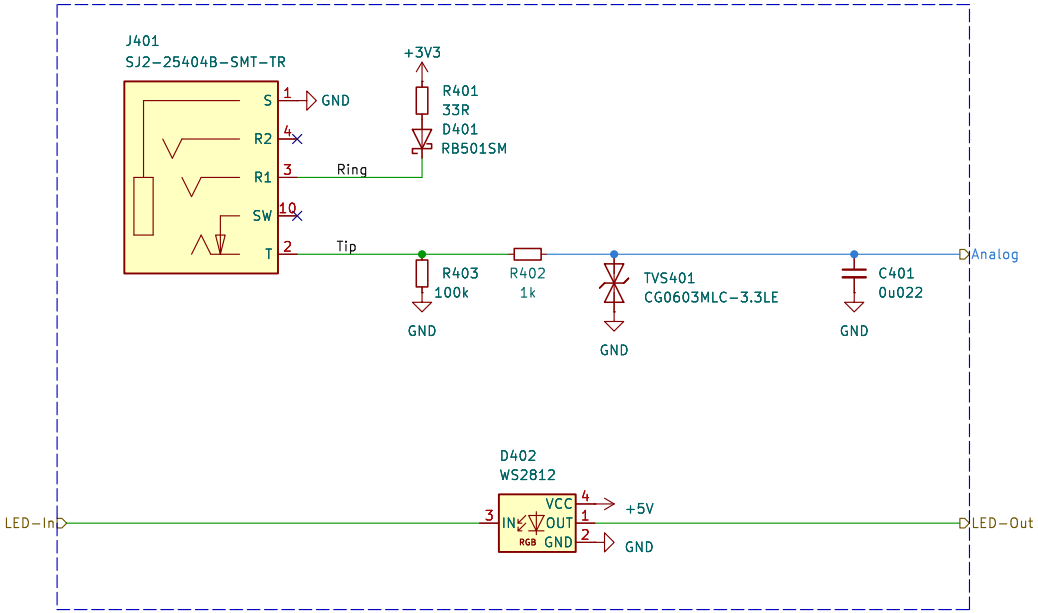

Expression Input
Versio Duo

Rev: 6
Id: 4/19
Sheet: Expression Input 3
Date: 2025-09-19

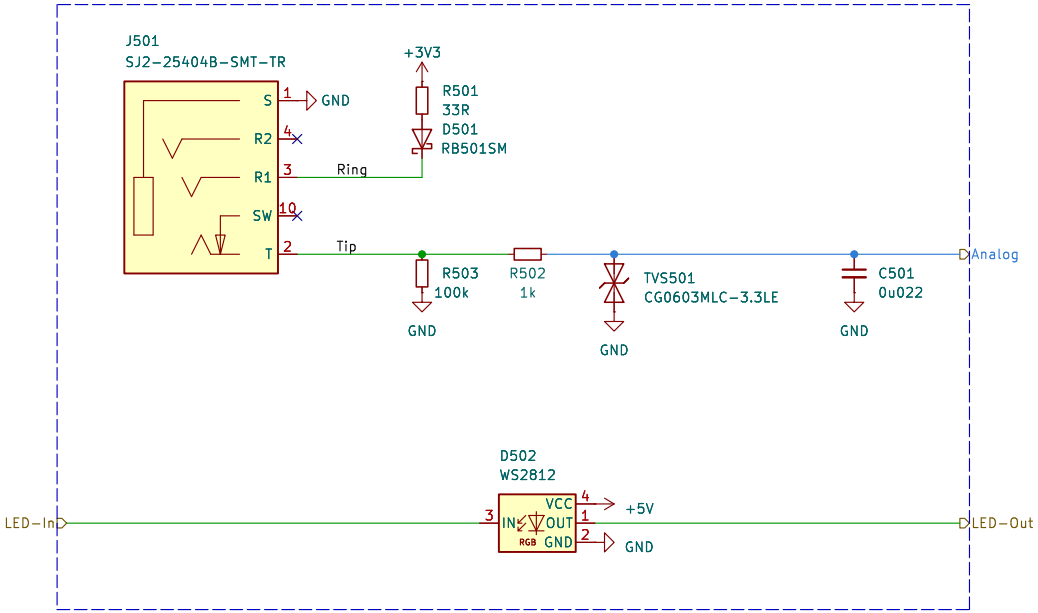

Expression Input
Versio Duo

Rev: 6
Id: 5/19
Sheet: Expression Input 4
Date: 2025-09-19

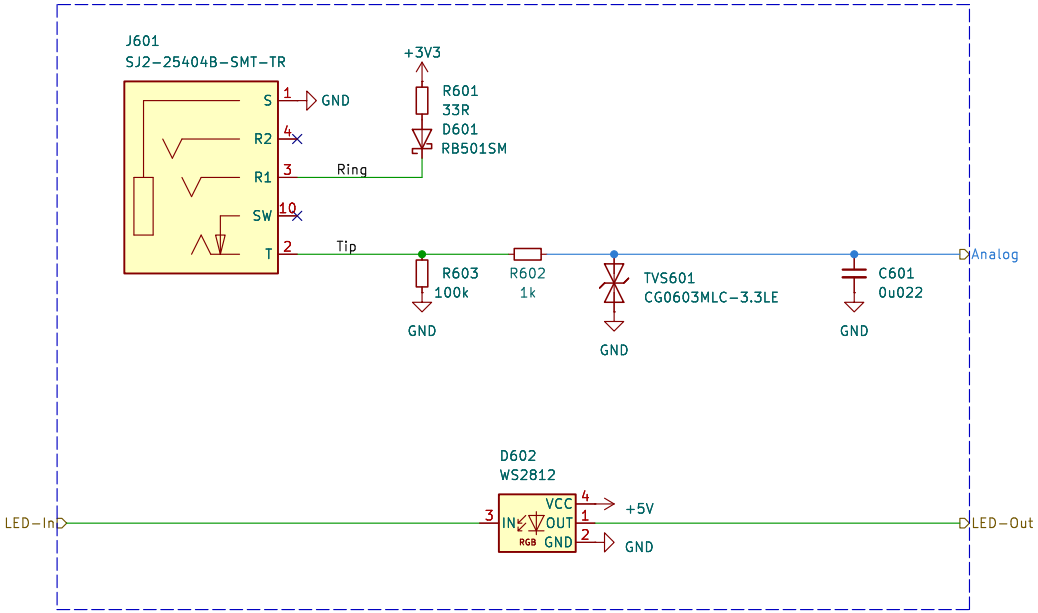

Expression Input
Versio Duo

Rev: 6
Id: 6/19
Sheet: Expression Input 5
Date: 2025-09-19

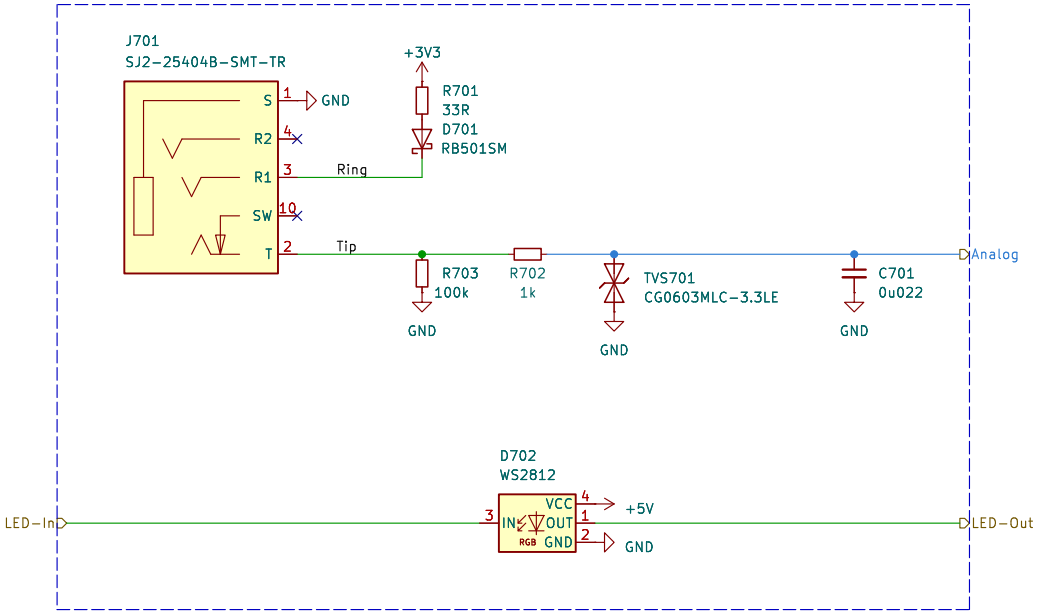

Expression Input
Versio Duo

Rev: 6
Id: 7/19
Sheet: Expression Input 6
Date: 2025-09-19

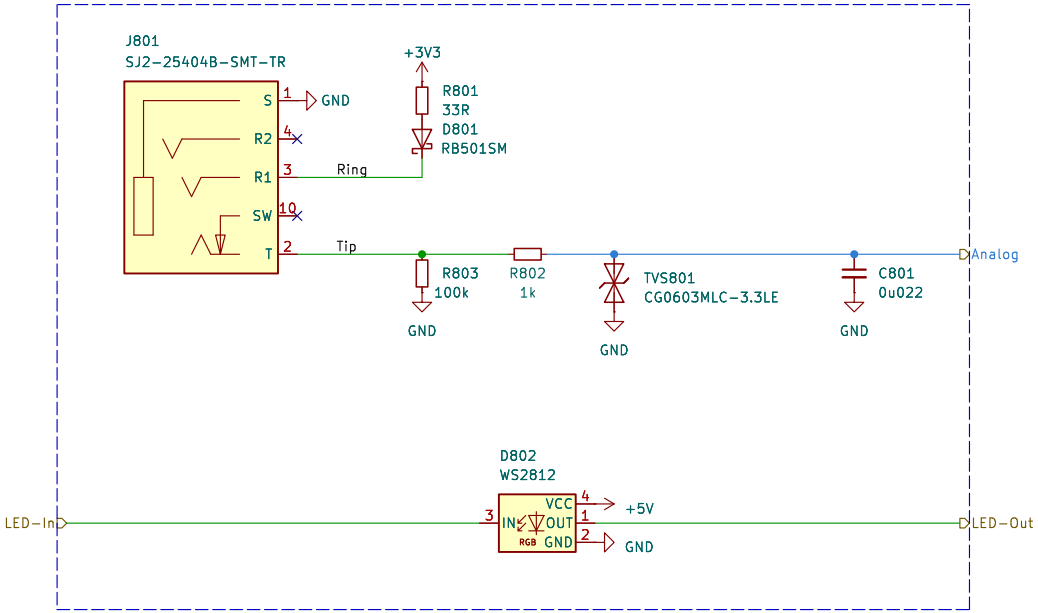

Expression Input
Versio Duo

Rev: 6
Id: 8/19
Sheet: Expression Input 7
Date: 2025-09-19

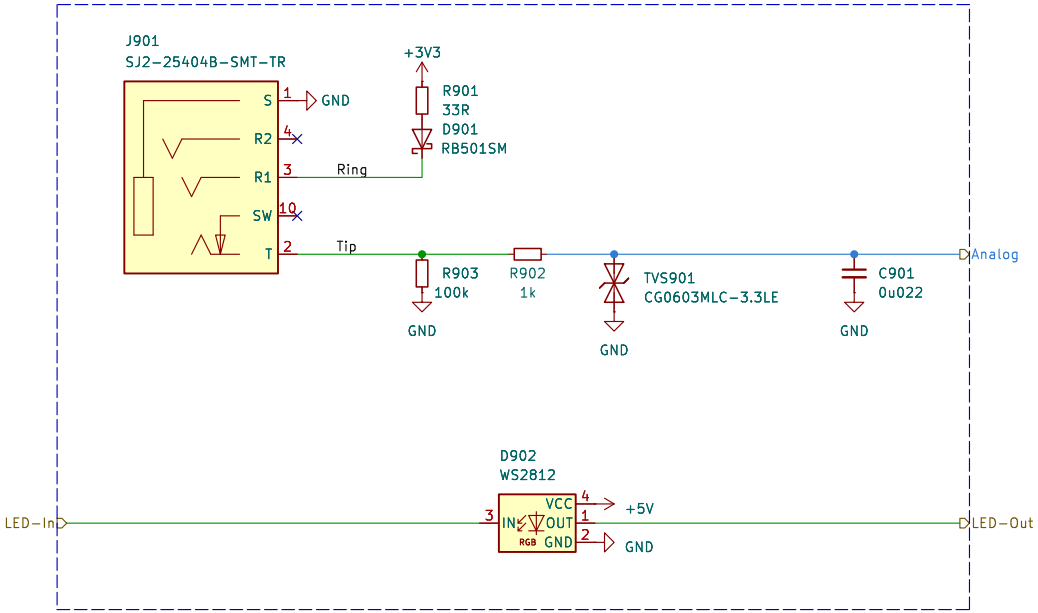

Expression Input
Versio Duo

Rev: 6
Id: 9/19
Sheet: Expression Input 8
Date: 2025-09-19

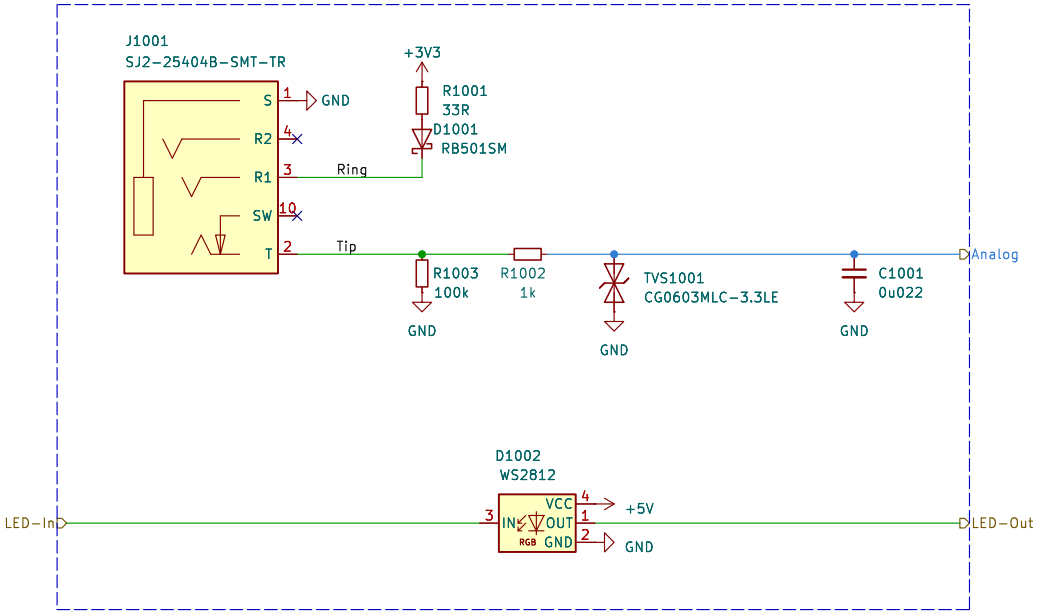

Expression Input
Versio Duo

Rev: 6
Id: 10/19
Sheet: Expression Input 9
Date: 2025-09-19

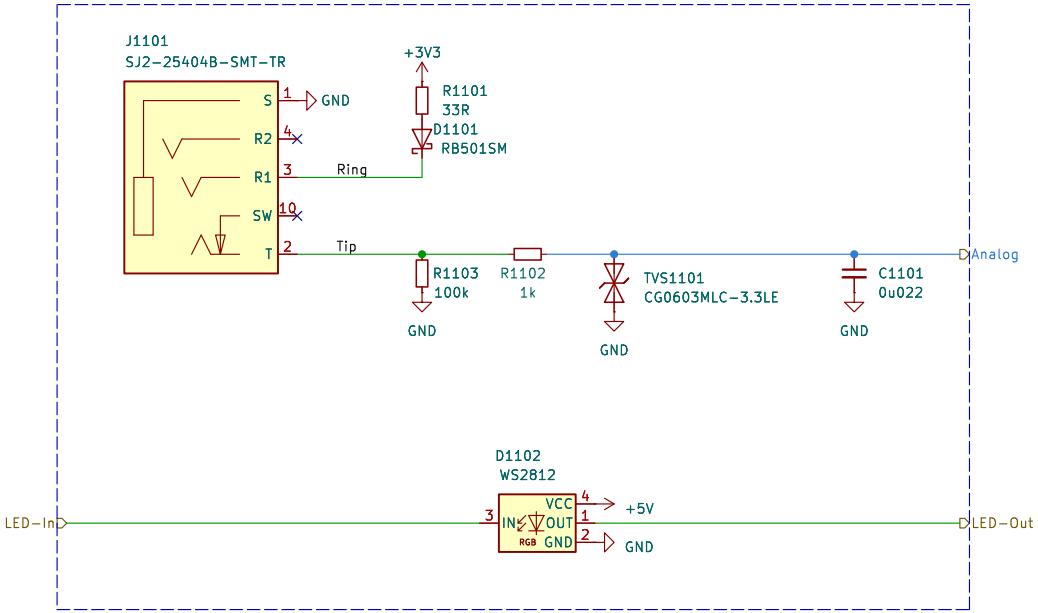

Expression Input
Versio Duo

Rev: 6
Id: 11/19
Sheet: Expression Input 10
Date: 2025-09-19

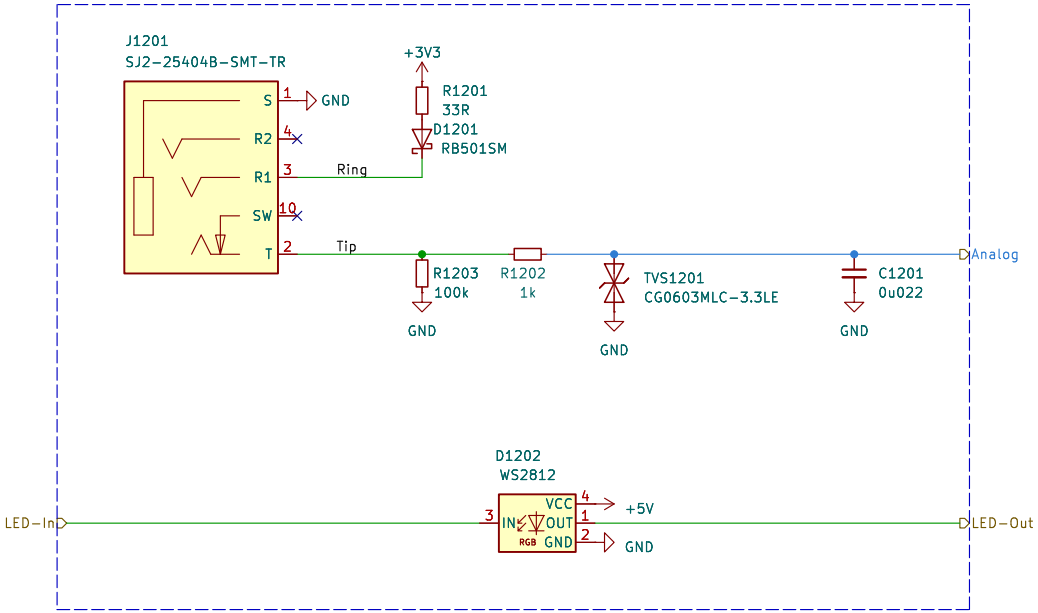

Expression Input
Versio Duo

Rev: 6
Id: 12/19
Sheet: Expression Input 11
Date: 2025-09-19

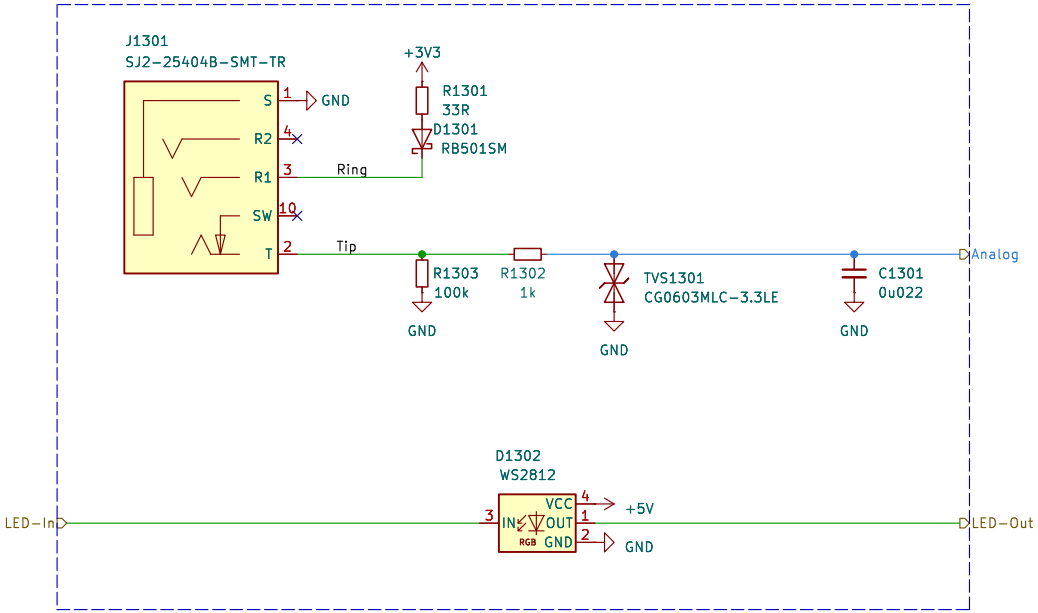

Expression Input
Versio Duo

Rev: 6
Id: 13/19
Sheet: Expression Input 12
Date: 2025-09-19

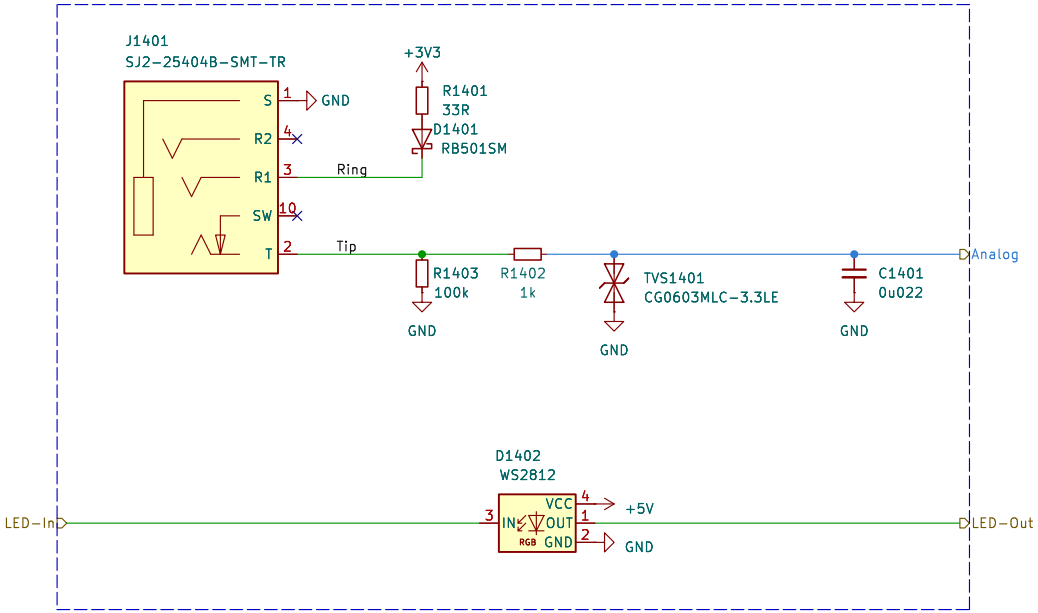

Expression Input
Versio Duo

Rev: 6
Id: 14/19
Sheet: Expression Input 13
Date: 2025-09-19

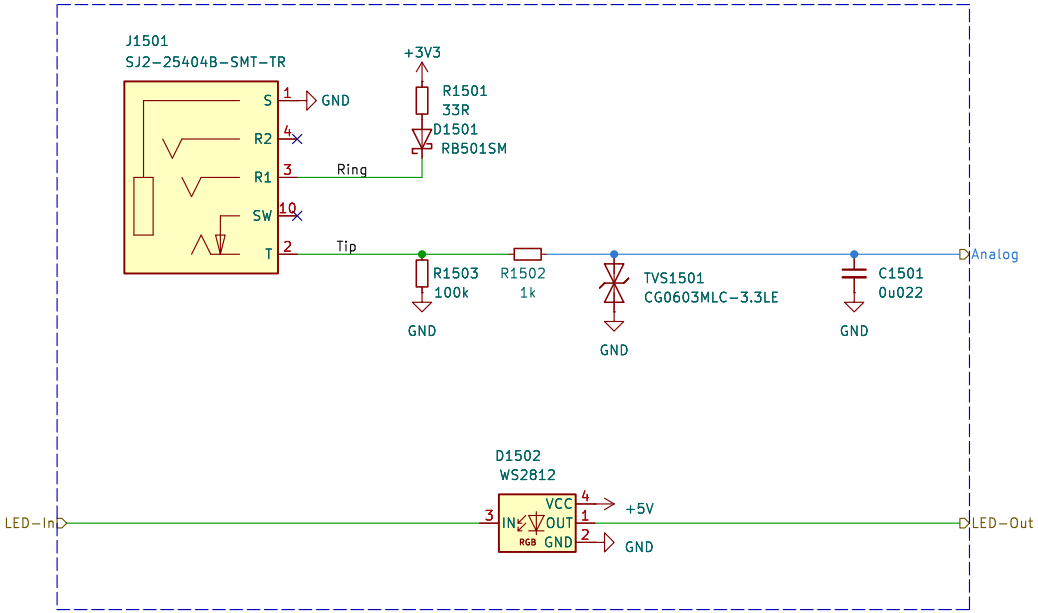

Expression Input
Versio Duo

Rev: 6
Id: 15/19
Sheet: Expression Input 14
Date: 2025-09-19

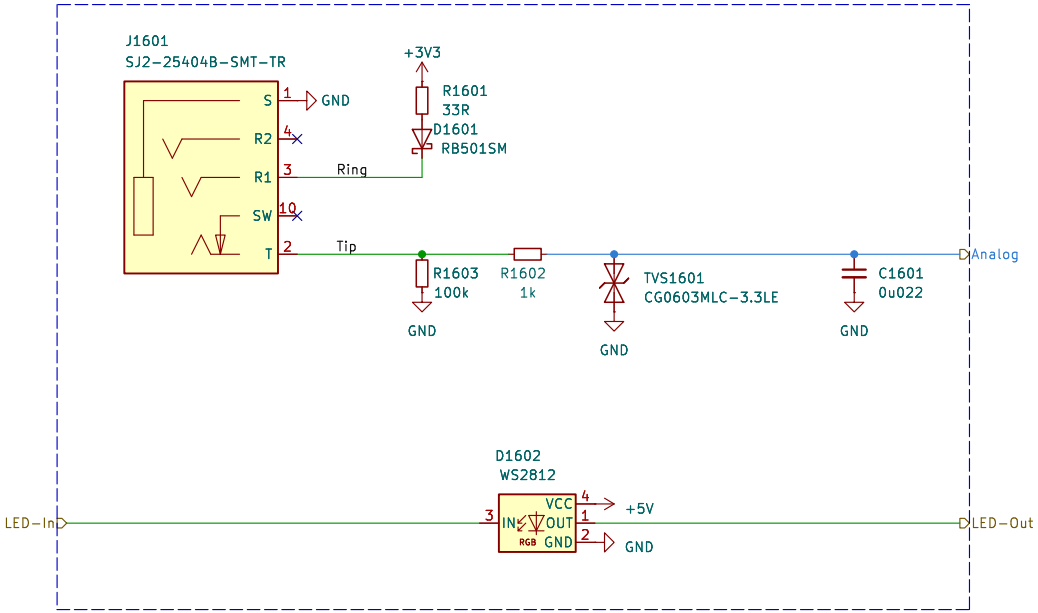

Expression Input
Versio Duo

Rev: 6
Id: 16/19
Sheet: Expression Input 15
Date: 2025-09-19

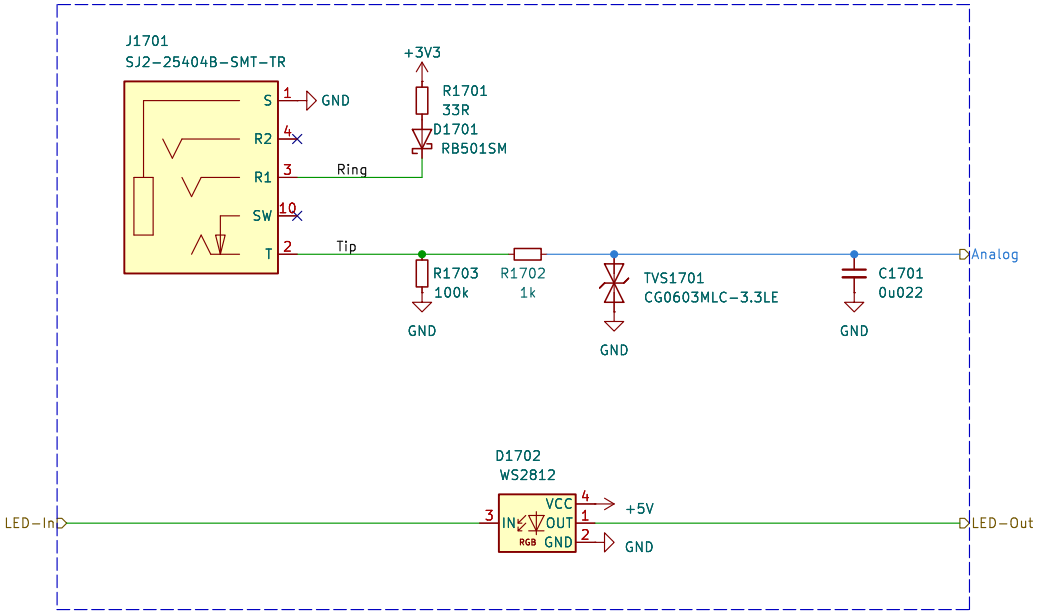

Expression Input
Versio Duo

Rev: 6
Id: 17/19
Sheet: Expression Input 16
Date: 2025-09-19

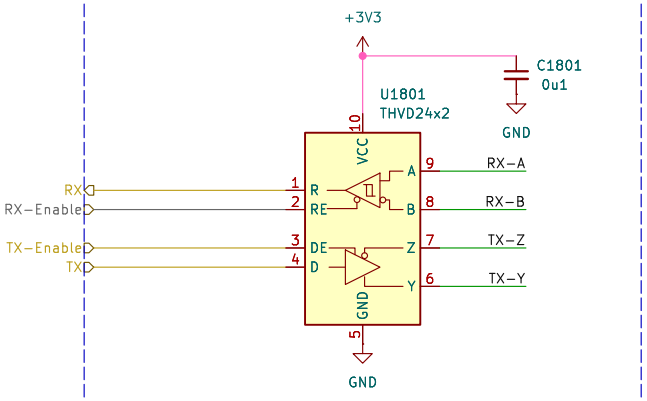

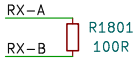

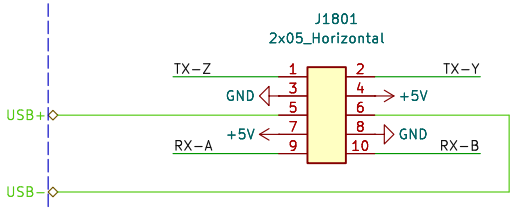

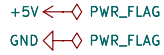

Power input from plug.

V2 Link
Plug

Rev: 4
Id: 18/19
Sheet: Link Plug
Date: 2025-10-26

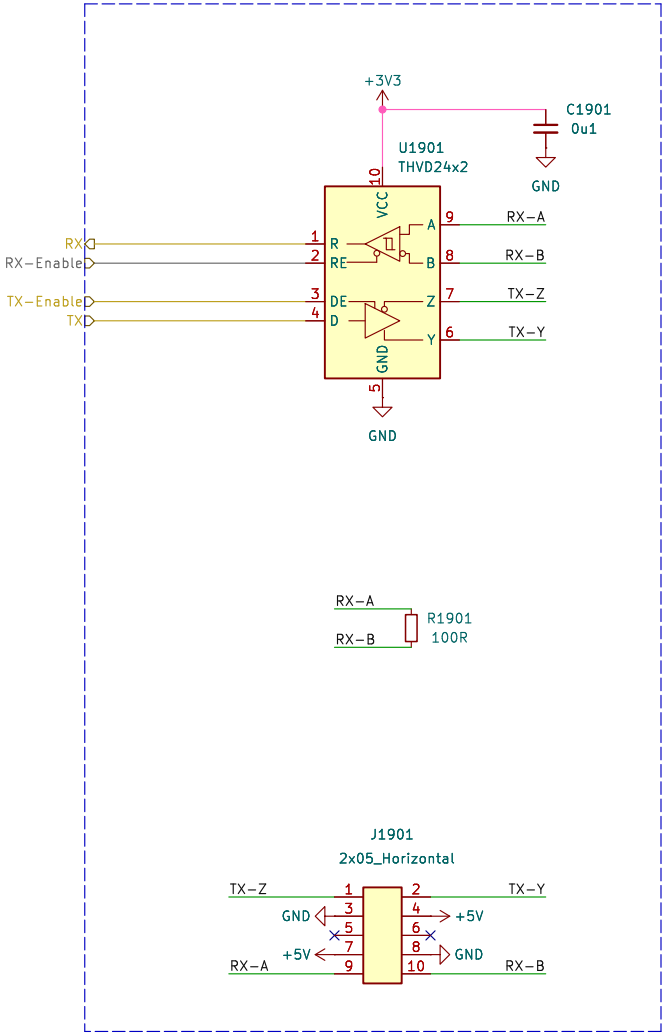

V2 Link
Socket

Rev: 4
Id: 19/19
Sheet: Link Socket
Date: 2025-10-26