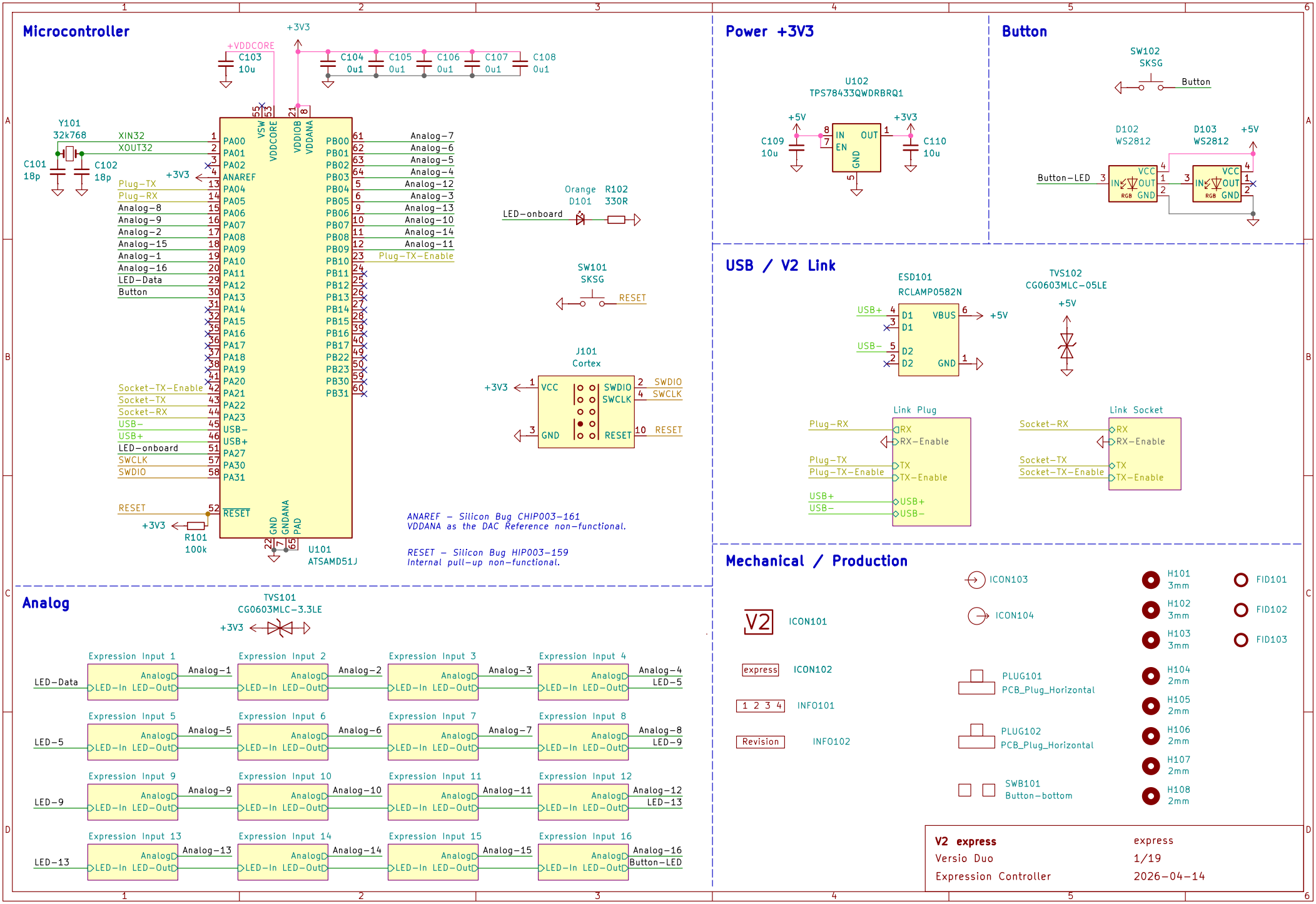
Microcontroller
+3V3
+VDDCORE
C103 10u
C104 0u1
C105 0u1
C106 0u1
C107 0u1
C108 0u1
Y101 32k768
C101 18p
C102 18p
XIN32
XOUT32
Plug-TX
Plug-RX
Analog-8
Analog-9
Analog-2
Analog-15
Analog-1
Analog-16
LED-Data
Button
Socket-TX-Enable
Socket-TX
Socket-RX
USB-
USB+
LED-onboard
SWCLK
SWDIO
RESET
R101 100k
U101 ATSAMD51J
Analog-7
Analog-6
Analog-5
Analog-4
Analog-12
Analog-3
Analog-13
Analog-10
Analog-14
Analog-11
Plug-TX-Enable
Orange D101
R102 330R
SW101 SKSG
J101 Cortex
VCC
GND
SWDIO
SWCLK
RESET
ANAREF - Silicon Bug CHIP003-161
VDDANA as the DAC Reference non-functional.
RESET - Silicon Bug HIP003-159
Internal pull-up non-functional.
Power +3V3
U102 TPS78433QWDRBRQ1
+5V
+3V3
C109 10u
C110 10u
IN
EN
OUT
GND
Button
SW102 SKSG
D102 WS2812
D103 WS2812
Button-LED
VCC
IN
OUT
GND
USB / V2 Link
ESD101 RCLAMP0582N
TVS102 CG0603MLC-05LE
USB+
USB-
D1
D2
VBUS
GND
Link Plug
Link Socket
RX
RX-Enable
TX
TX-Enable
Mechanical / Production
ICON101
ICON102
INFO101
INFO102
express
1 2 3 4
Revision
ICON103
ICON104
PLUG101 PCB_Plug_Horizontal
PLUG102 PCB_Plug_Horizontal
SWB101 Button-bottom
H101 3mm
H102 3mm
H103 3mm
H104 2mm
H105 2mm
H106 2mm
H107 2mm
H108 2mm
FID101
FID102
FID103
V2 express
Versio Duo
Expression Controller
express
1/19
2026-04-14
Analog
TVS101 CG0603MLC-3.3LE
Expression Input 1
Expression Input 2
Expression Input 3
Expression Input 4
Expression Input 5
Expression Input 6
Expression Input 7
Expression Input 8
Expression Input 9
Expression Input 10
Expression Input 11
Expression Input 12
Expression Input 13
Expression Input 14
Expression Input 15
Expression Input 16
Analog
LED-In
LED-Out
LED-Data
LED-5
LED-9
LED-13
Analog-1
Analog-2
Analog-3
Analog-4
Analog-5
Analog-6
Analog-7
Analog-8
Analog-9
Analog-10
Analog-11
Analog-12
Analog-13
Analog-14
Analog-15
Analog-16
Button-LED

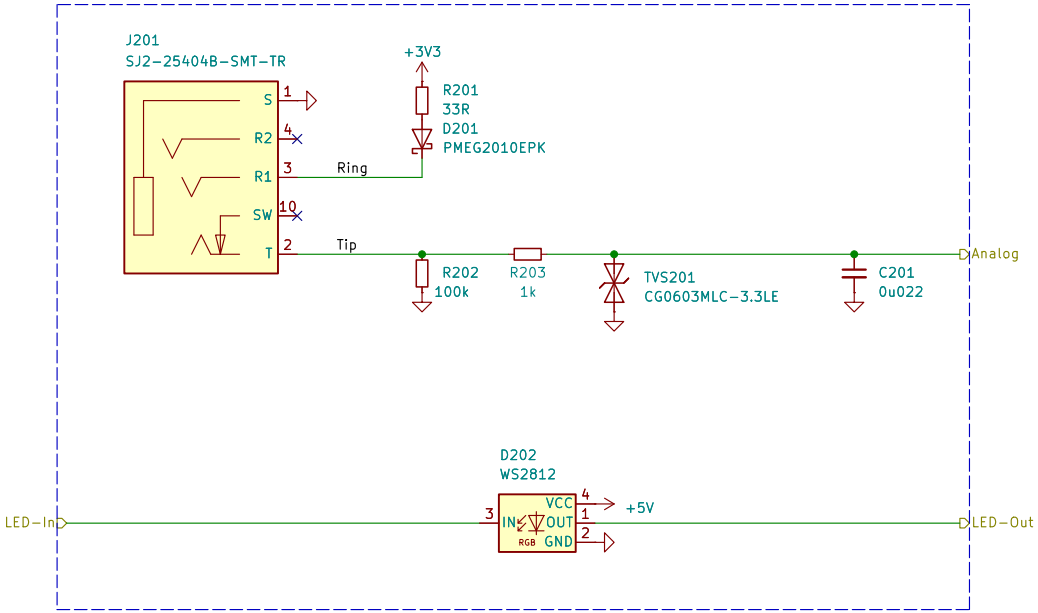

V2 express	Expression Input 1
Versio Duo	2/19
Expression Controller	2026-04-14

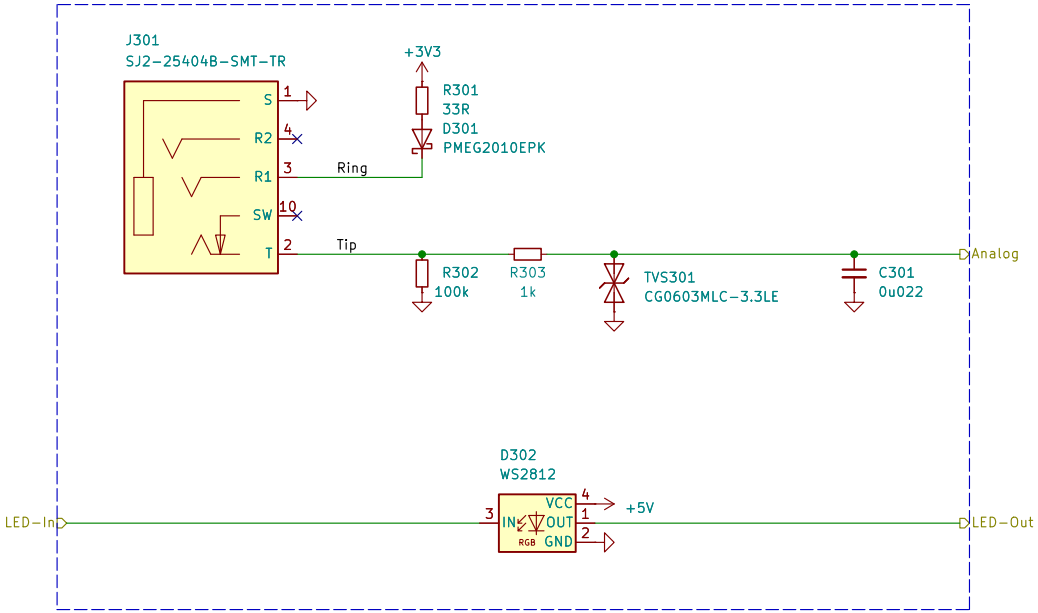

V2 express	Expression Input 2
Versio Duo	3/19
Expression Controller	2026-04-14

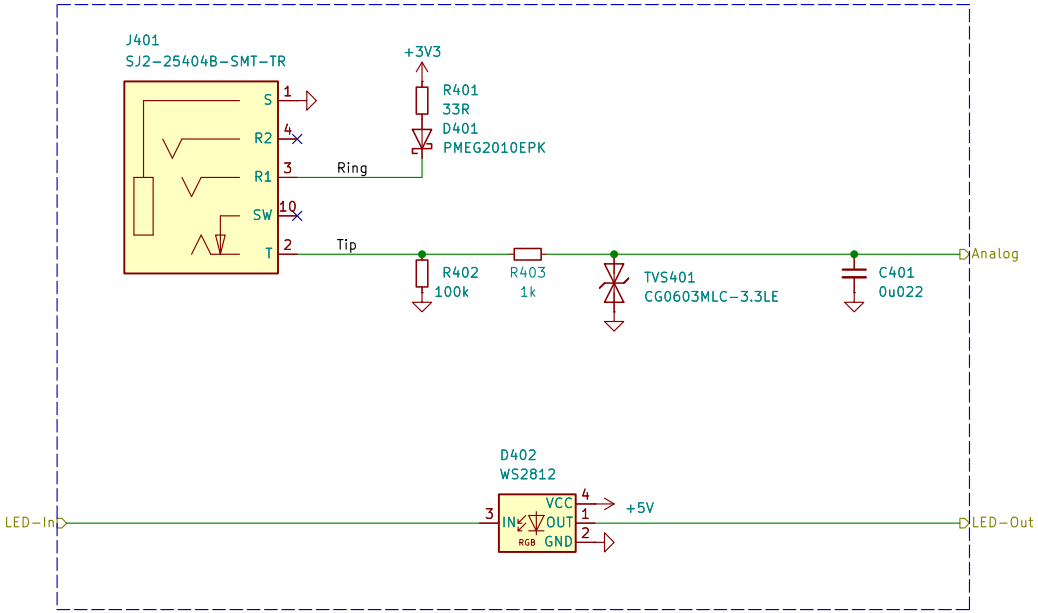

V2 express	Expression Input 3
Versio Duo	4/19
Expression Controller	2026-04-14

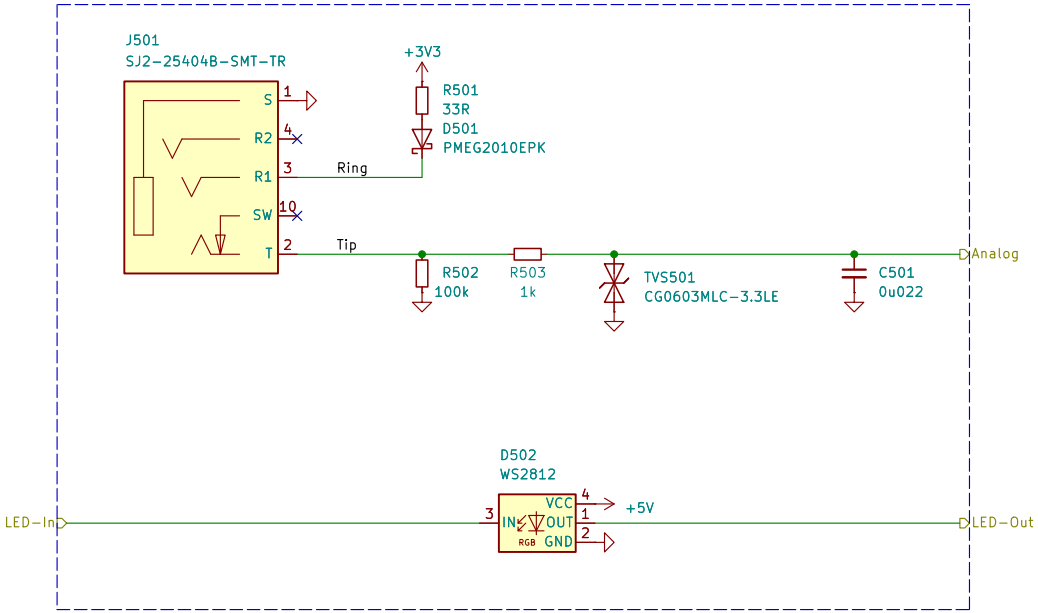

V2 express	Expression Input 4
Versio Duo	5/19
Expression Controller	2026-04-14

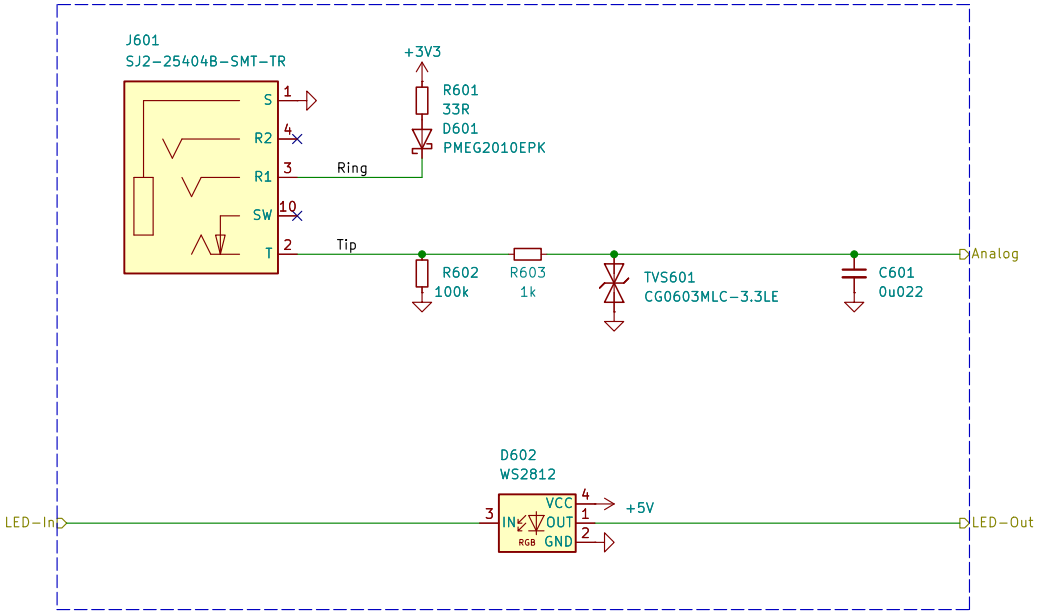

V2 express	Expression Input 5
Versio Duo	6/19
Expression Controller	2026-04-14

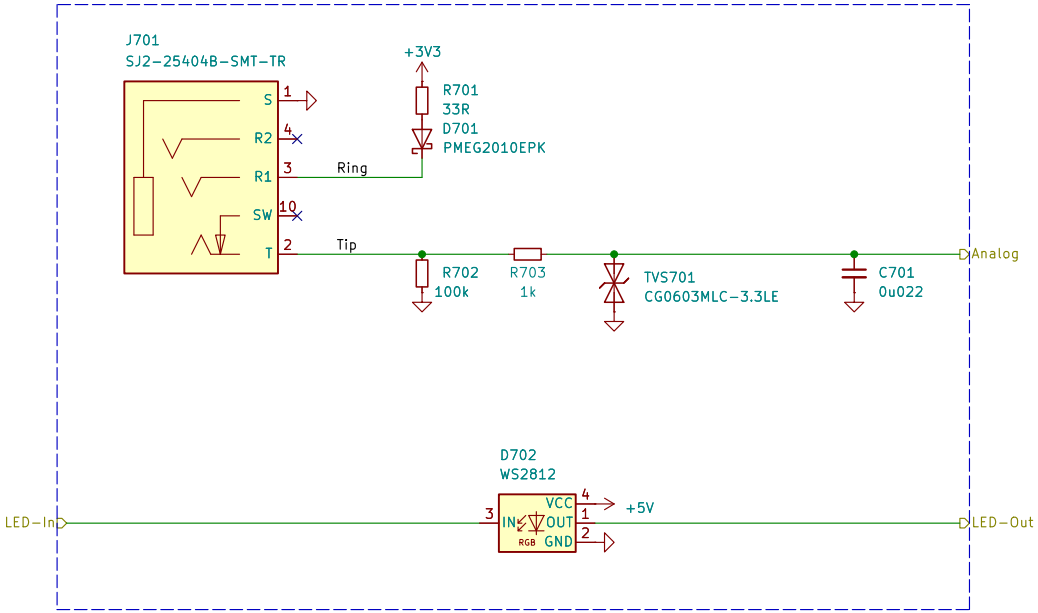

V2 express	Expression Input 6
Versio Duo	7/19
Expression Controller	2026-04-14

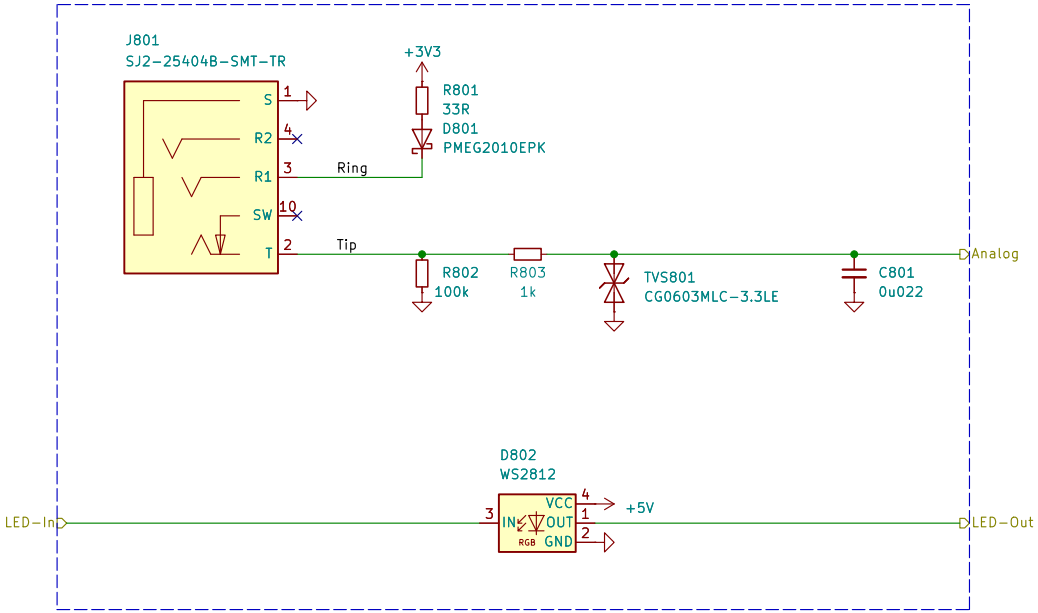

V2 express	Expression Input 7
Versio Duo	8/19
Expression Controller	2026-04-14

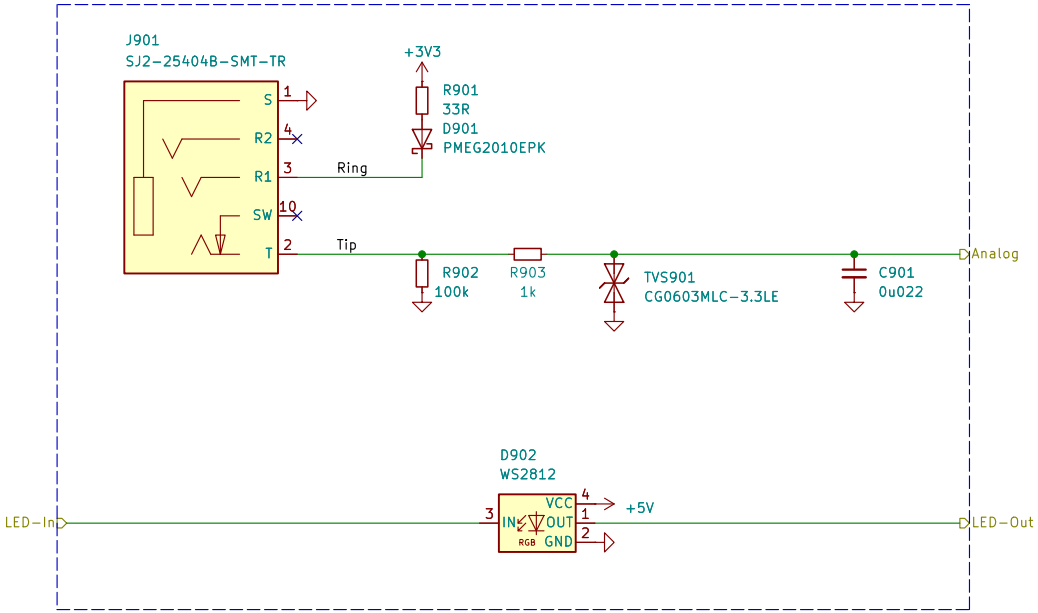

V2 express	Expression Input 8
Versio Duo	9/19
Expression Controller	2026-04-14

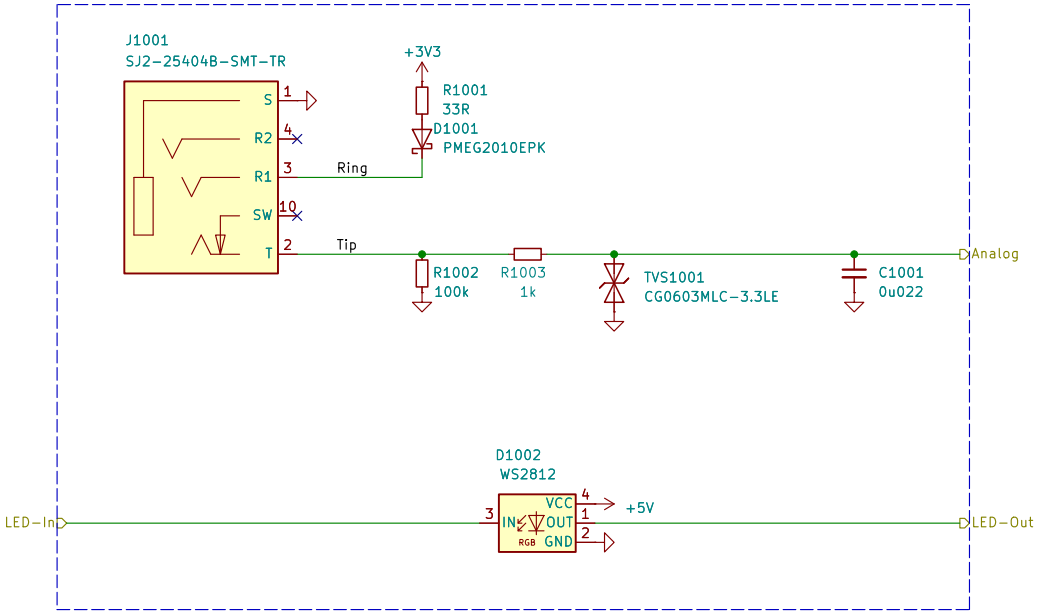

V2 express	Expression Input 9
Versio Duo	10/19
Expression Controller	2026-04-14

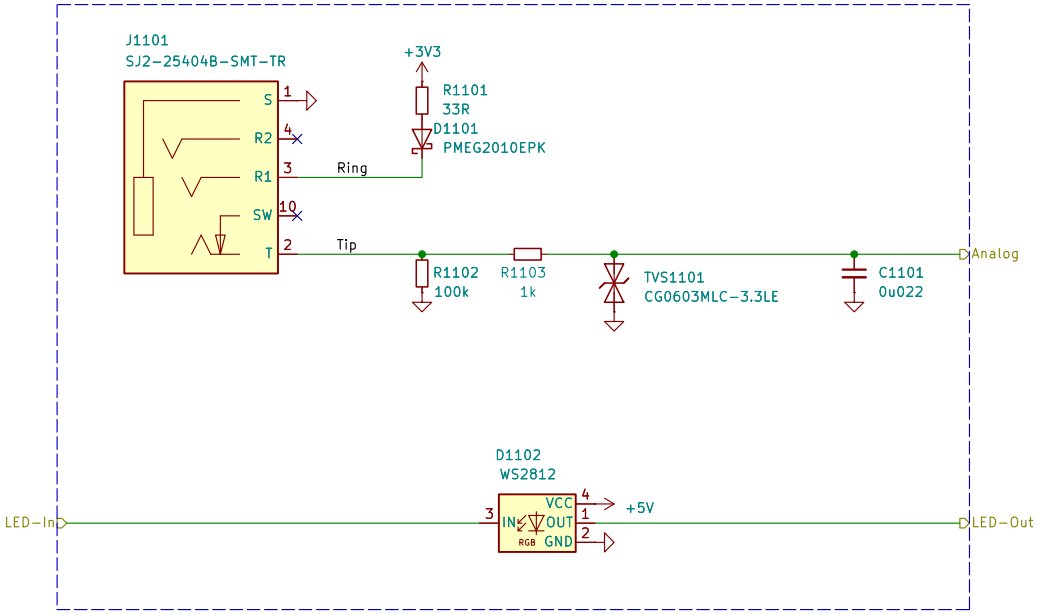

V2 express	Expression Input 10
Versio Duo	11/19
Expression Controller	2026-04-14

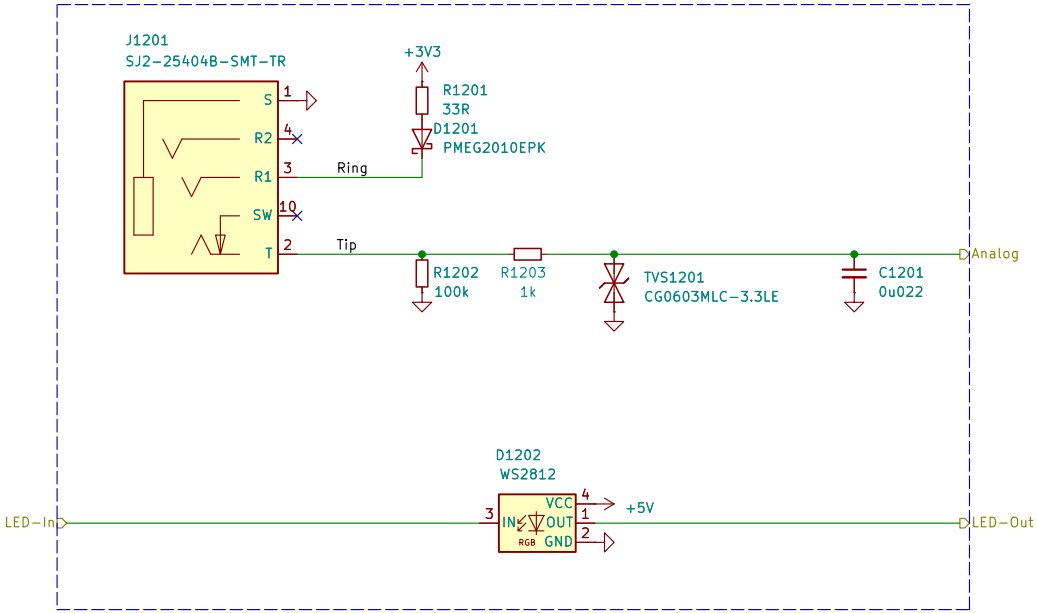

V2 express	Expression Input 11
Versio Duo	12/19
Expression Controller	2026-04-14

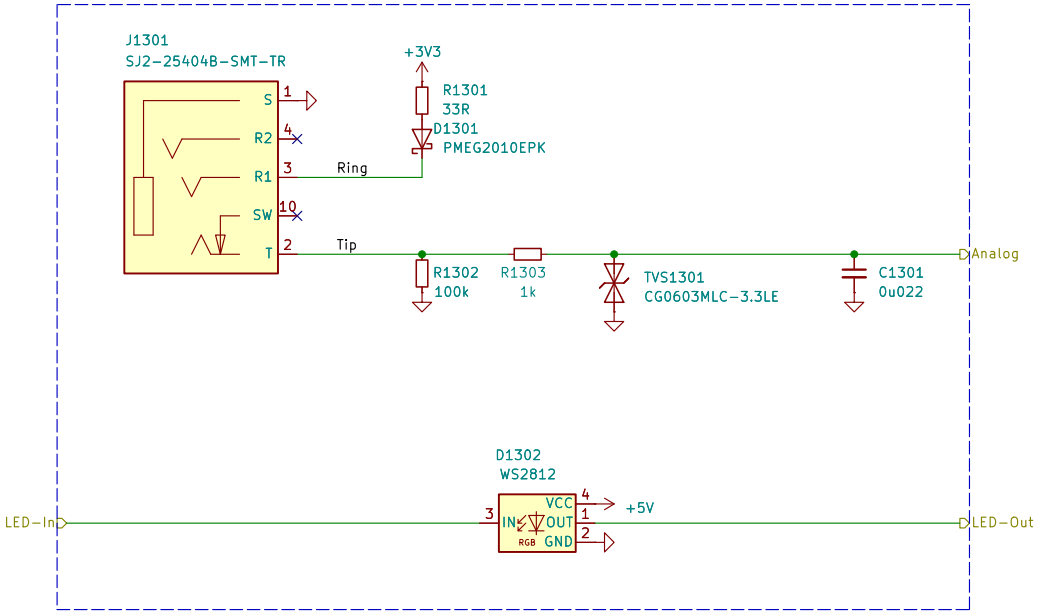

V2 express	Expression Input 12
Versio Duo	13/19
Expression Controller	2026-04-14

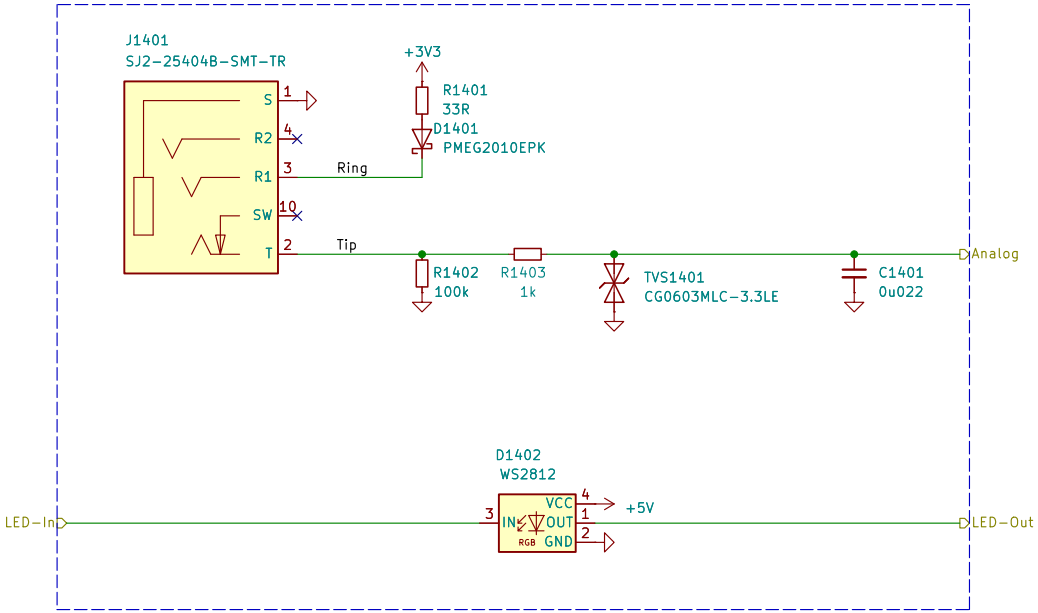

V2 express	Expression Input 13
Versio Duo	14/19
Expression Controller	2026-04-14

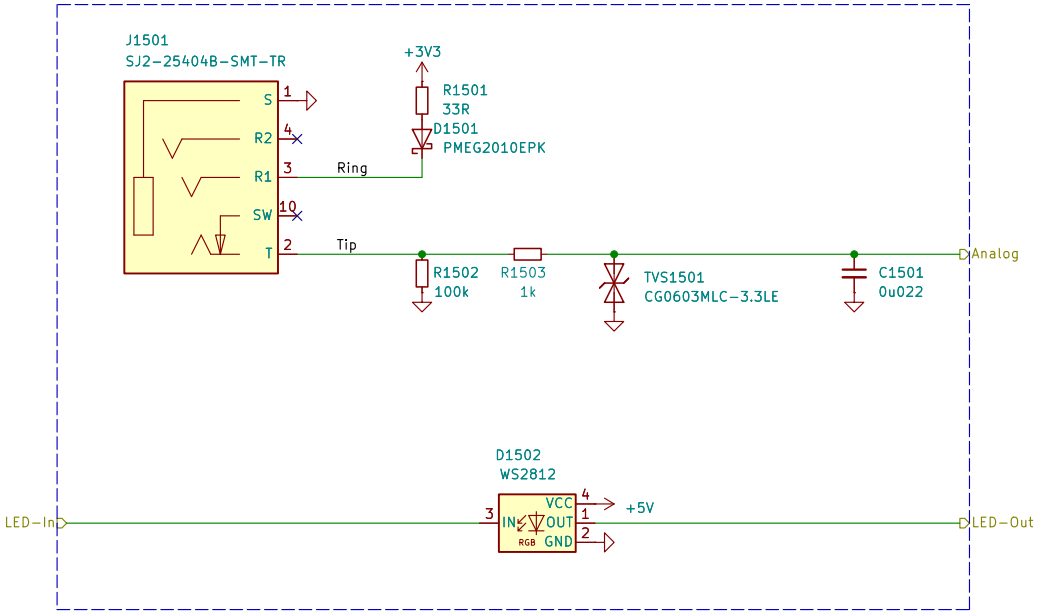

V2 express	Expression Input 14
Versio Duo	15/19
Expression Controller	2026-04-14

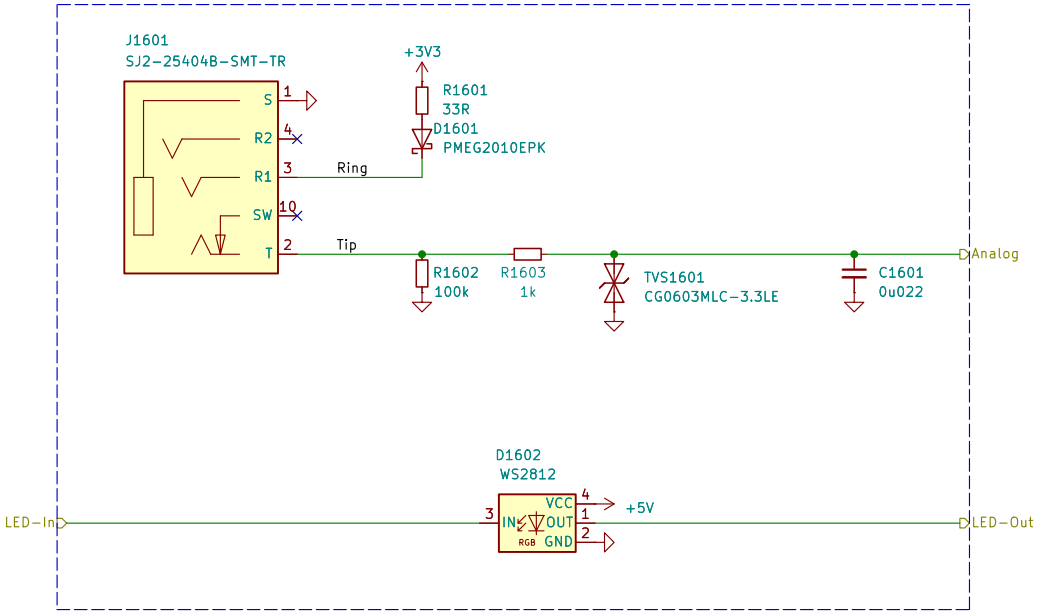

V2 express	Expression Input 15
Versio Duo	16/19
Expression Controller	2026-04-14

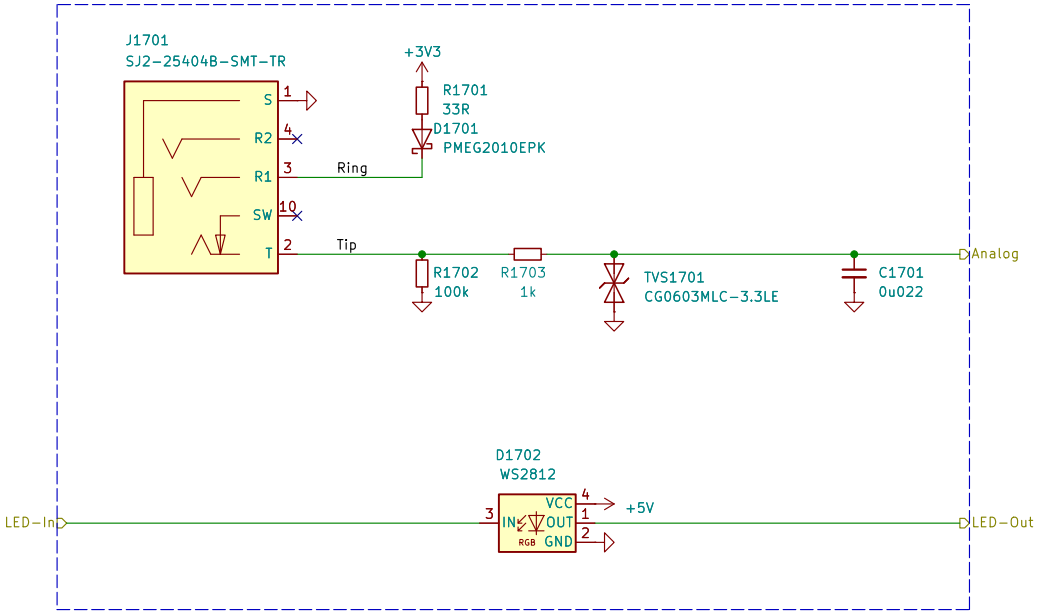

V2 express	Expression Input 16
Versio Duo	17/19
Expression Controller	2026-04-14

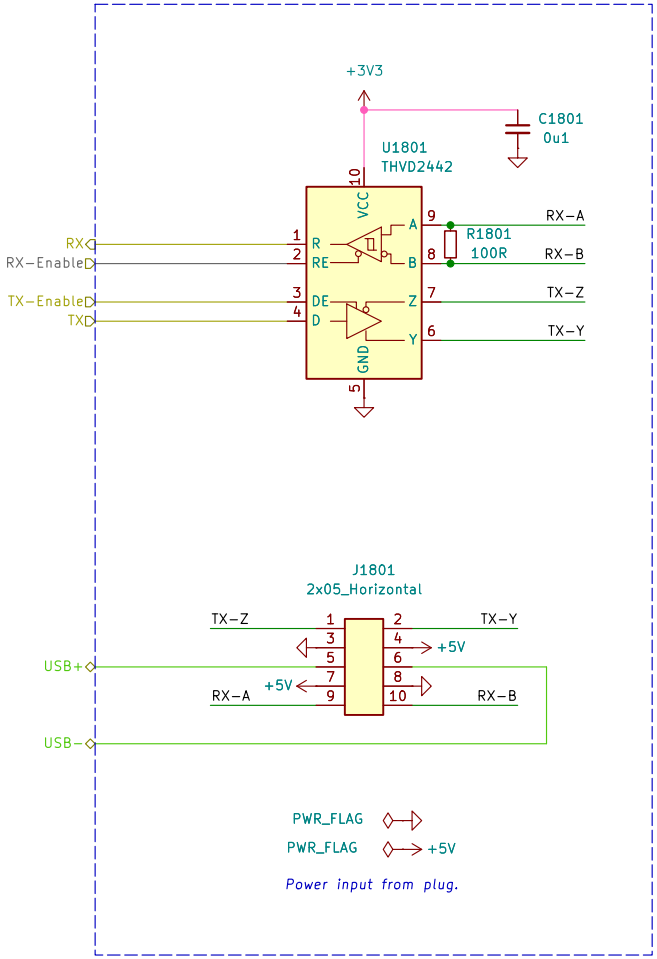

V2 express	Link Plug
Versio Duo	18/19
Expression Controller	2026-04-14

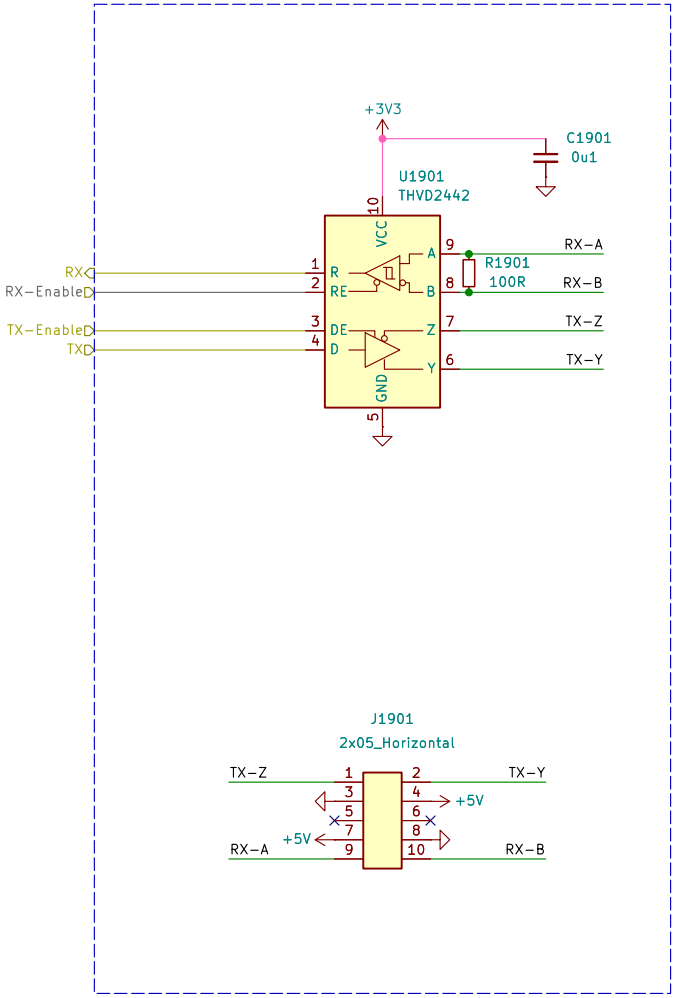

V2 express	Link Socket
Versio Duo	19/19
Expression Controller	2026-04-14