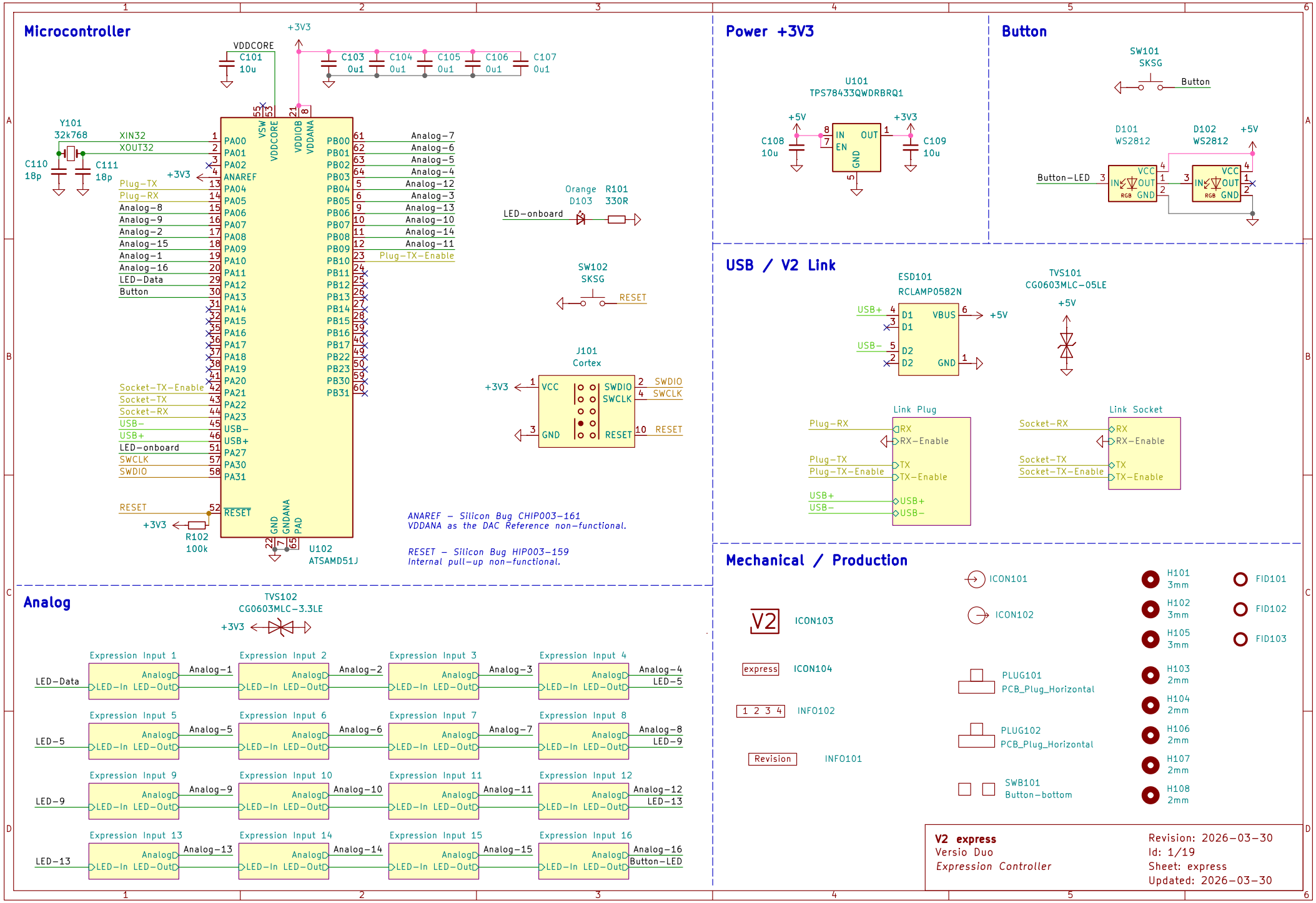
Microcontroller
+3V3
VDDCORE
C101 10u
C103 0u1
C104 0u1
C105 0u1
C106 0u1
C107 0u1
Y101 32k768
C110 18p
C111 18p
XIN32
XOUT32
Plug-TX
Plug-RX
Analog-8
Analog-9
Analog-2
Analog-15
Analog-1
Analog-16
LED-Data
Button
Socket-TX-Enable
Socket-TX
Socket-RX
USB-
USB+
LED-onboard
SWCLK
SWDIO
RESET
R102 100k
U102 ATSAMD51J
Analog-7
Analog-6
Analog-5
Analog-4
Analog-12
Analog-3
Analog-13
Analog-10
Analog-14
Analog-11
Plug-TX-Enable
Orange D103
R101 330R
SW102 SKSG
J101 Cortex
VCC
GND
SWDIO
SWCLK
RESET
ANAREF - Silicon Bug CHIP003-161
VDDANA as the DAC Reference non-functional.
RESET - Silicon Bug HIP003-159
Internal pull-up non-functional.
Power +3V3
U101 TPS78433QWDRBRQ1
+5V
C108 10u
IN
EN
OUT
GND
C109 10u
Button
SW101 SKSG
D101 WS2812
D102 WS2812
Button-LED
VCC
IN
OUT
GND
RGB
USB / V2 Link
ESD101 RCLAMP0582N
TVS101 CG0603MLC-05LE
USB+
USB-
D1
D2
VBUS
GND
Link Plug
Link Socket
RX
RX-Enable
TX
TX-Enable
Mechanical / Production
ICON101
ICON102
ICON103
ICON104
INFO102
INFO101
PLUG101 PCB_Plug_Horizontal
PLUG102 PCB_Plug_Horizontal
SWB101 Button-bottom
H101 3mm
H102 3mm
H105 3mm
H103 2mm
H104 2mm
H106 2mm
H107 2mm
H108 2mm
FID101
FID102
FID103
Analog
TVS102 CG0603MLC-3.3LE
Expression Input 1
Expression Input 2
Expression Input 3
Expression Input 4
Expression Input 5
Expression Input 6
Expression Input 7
Expression Input 8
Expression Input 9
Expression Input 10
Expression Input 11
Expression Input 12
Expression Input 13
Expression Input 14
Expression Input 15
Expression Input 16
Analog
LED-In
LED-Out
LED-Data
LED-5
LED-9
LED-13
Analog-1
Analog-2
Analog-3
Analog-4
Analog-5
Analog-6
Analog-7
Analog-8
Analog-9
Analog-10
Analog-11
Analog-12
Analog-13
Analog-14
Analog-15
Analog-16
Button-LED
V2 express
Versio Duo
Expression Controller
Revision: 2026-03-30
Id: 1/19
Sheet: express
Updated: 2026-03-30

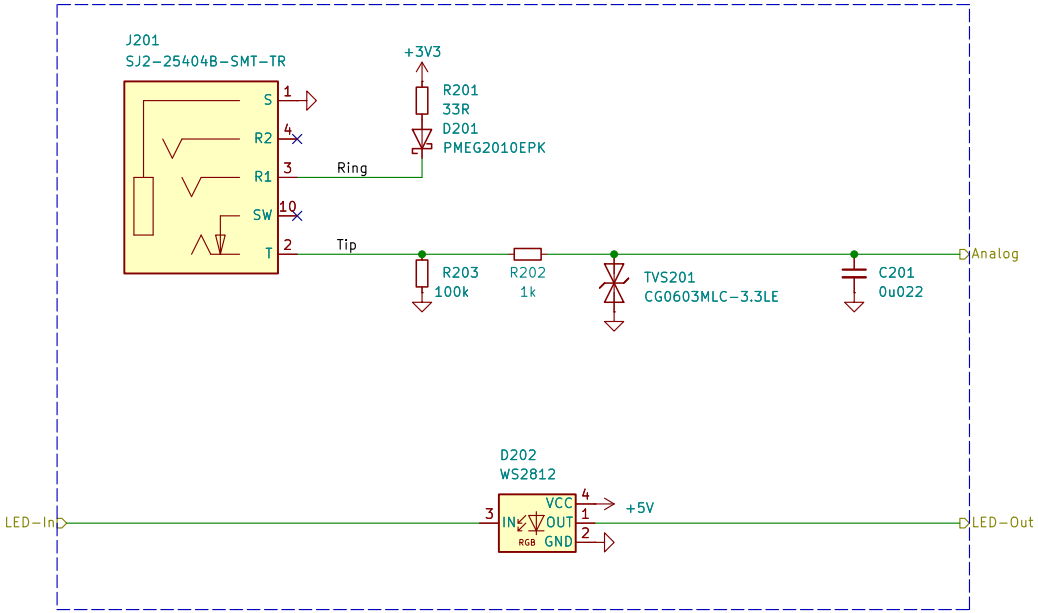

V2 express
Versio Duo

Revision: 2026-03-30
Id: 2/19
Sheet: Expression Input 1
Updated: 2026-03-30

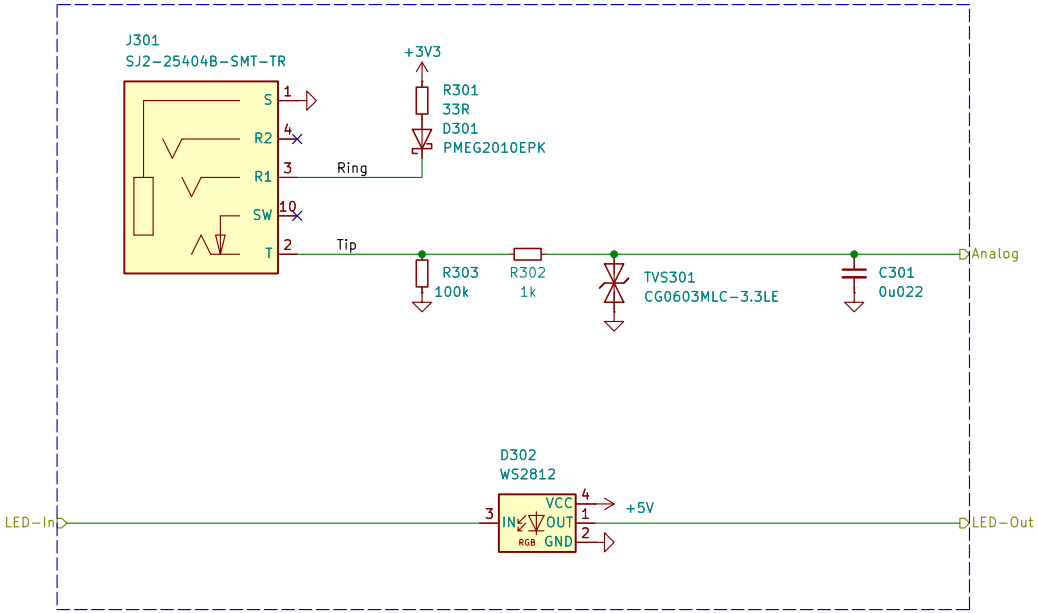

V2 express
Versio Duo

Revision: 2026-03-30
Id: 3/19
Sheet: Expression Input 2
Updated: 2026-03-30

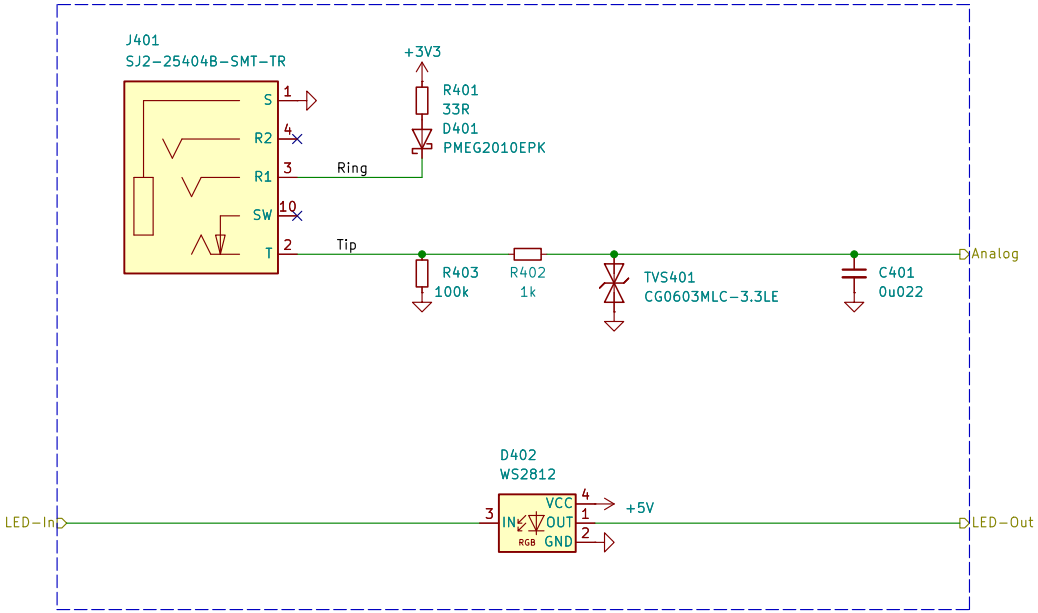

V2 express
Versio Duo

Revision: 2026-03-30
Id: 4/19
Sheet: Expression Input 3
Updated: 2026-03-30

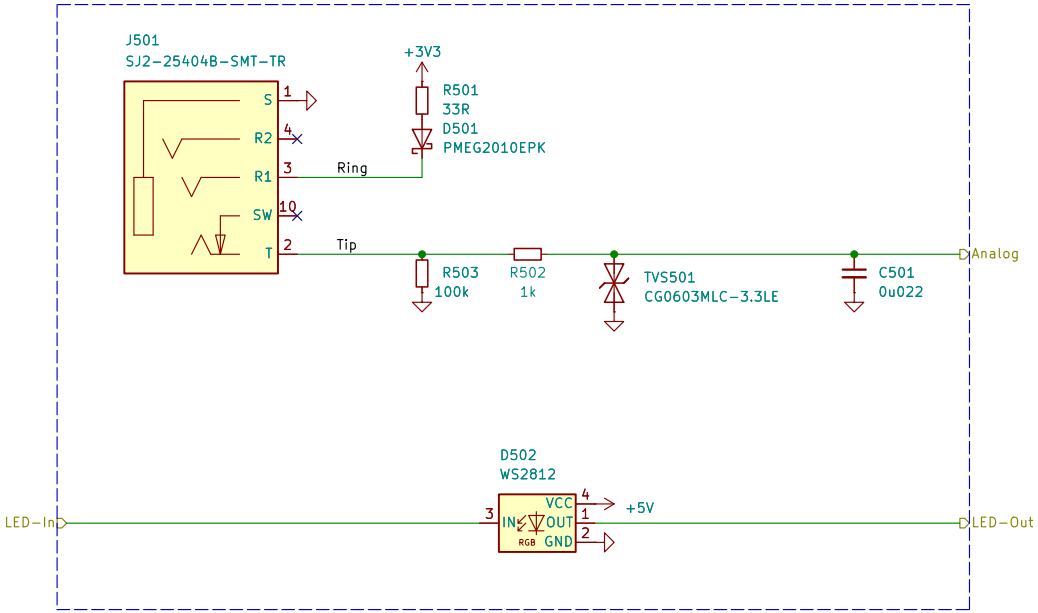

V2 express
Versio Duo

Revision: 2026-03-30
Id: 5/19
Sheet: Expression Input 4
Updated: 2026-03-30

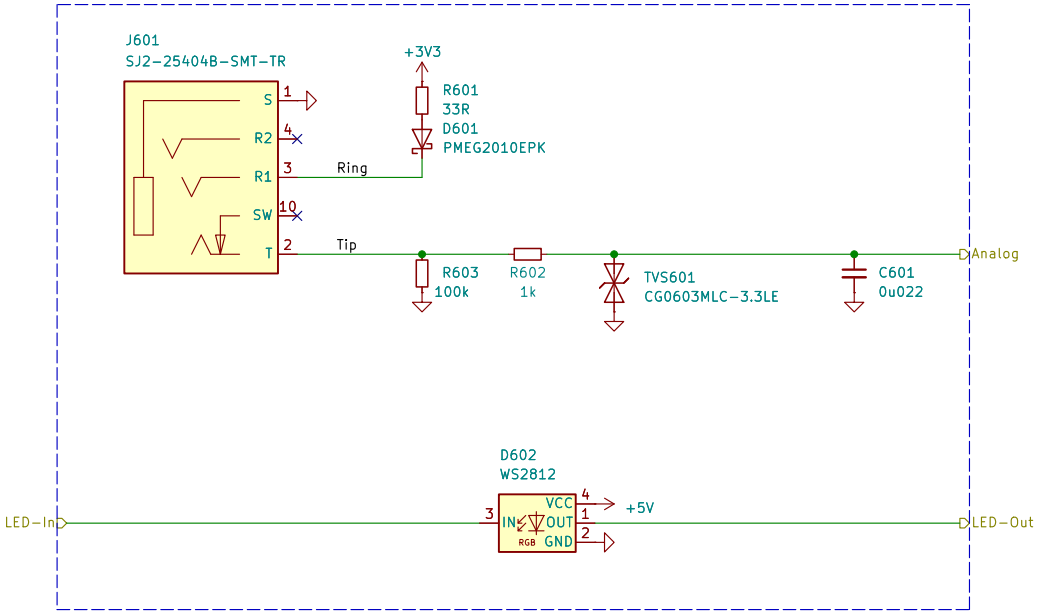

V2 express
Versio Duo

Revision: 2026-03-30
Id: 6/19
Sheet: Expression Input 5
Updated: 2026-03-30

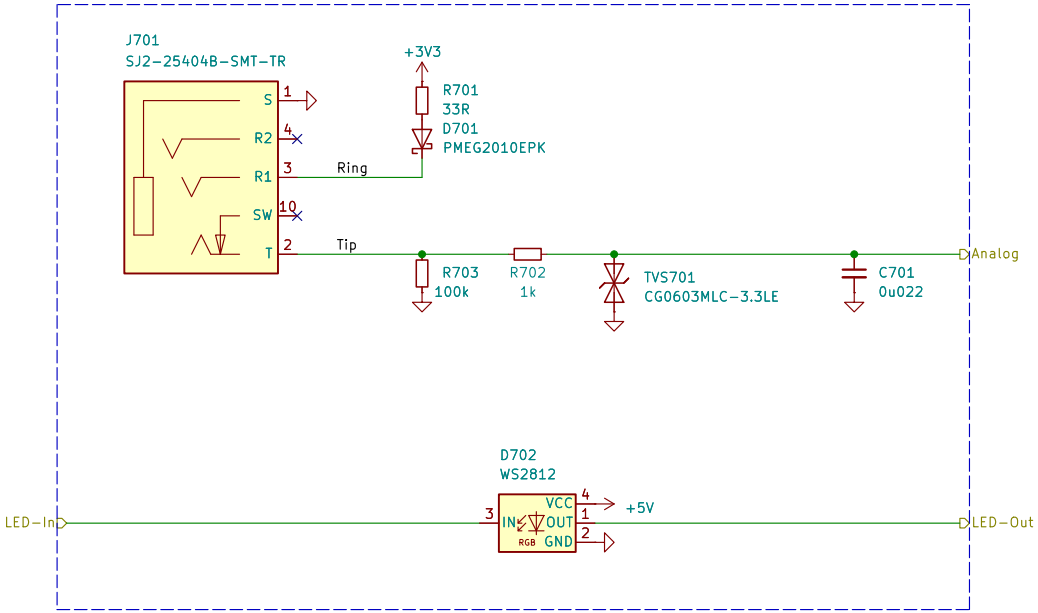

V2 express
Versio Duo

Revision: 2026-03-30
Id: 7/19
Sheet: Expression Input 6
Updated: 2026-03-30

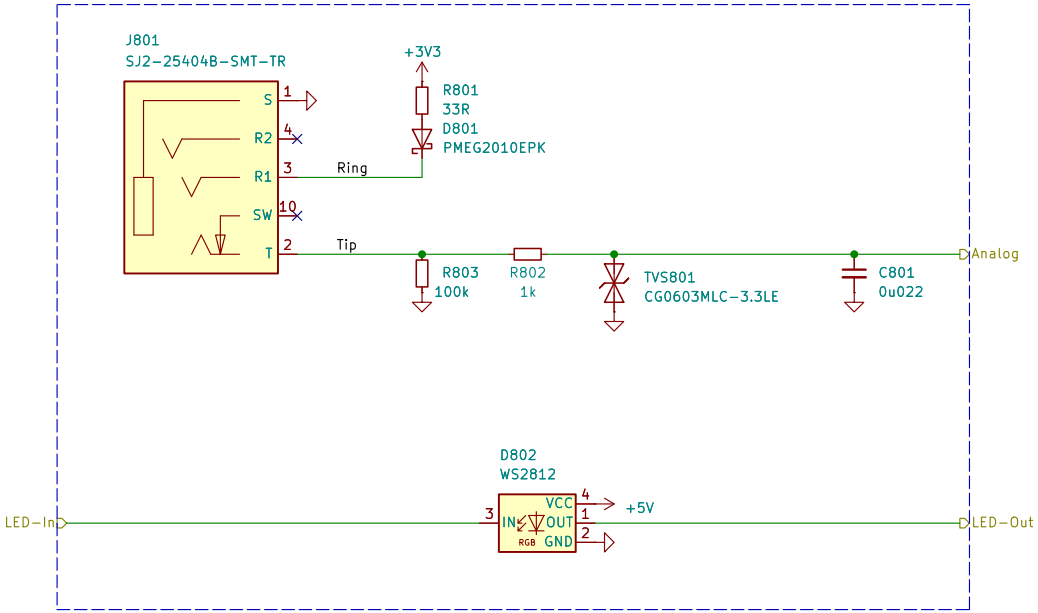

V2 express
Versio Duo

Revision: 2026-03-30
Id: 8/19
Sheet: Expression Input 7
Updated: 2026-03-30

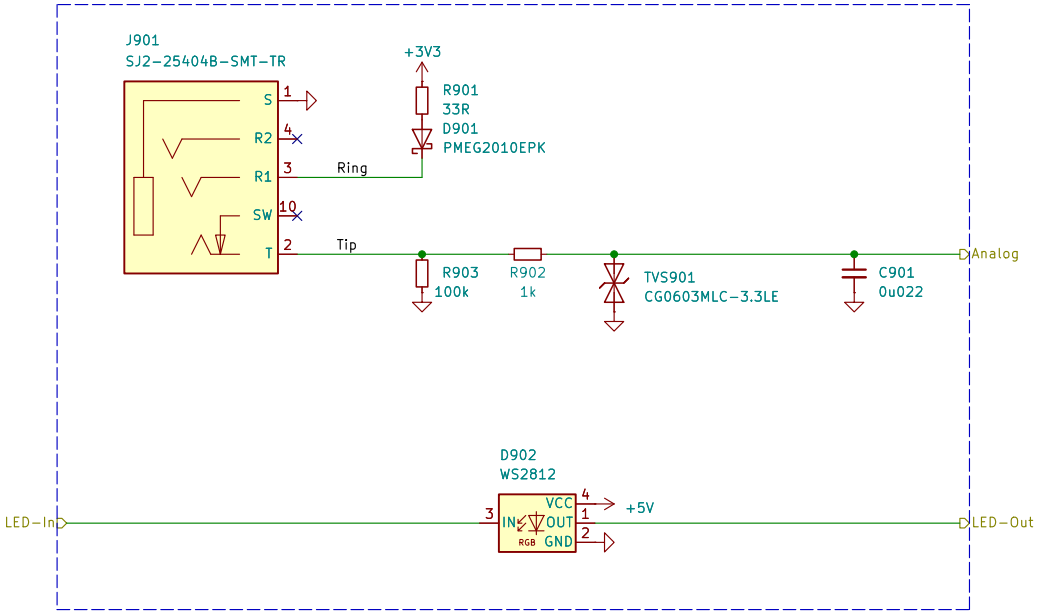

V2 express
Versio Duo

Revision: 2026-03-30
Id: 9/19
Sheet: Expression Input 8
Updated: 2026-03-30

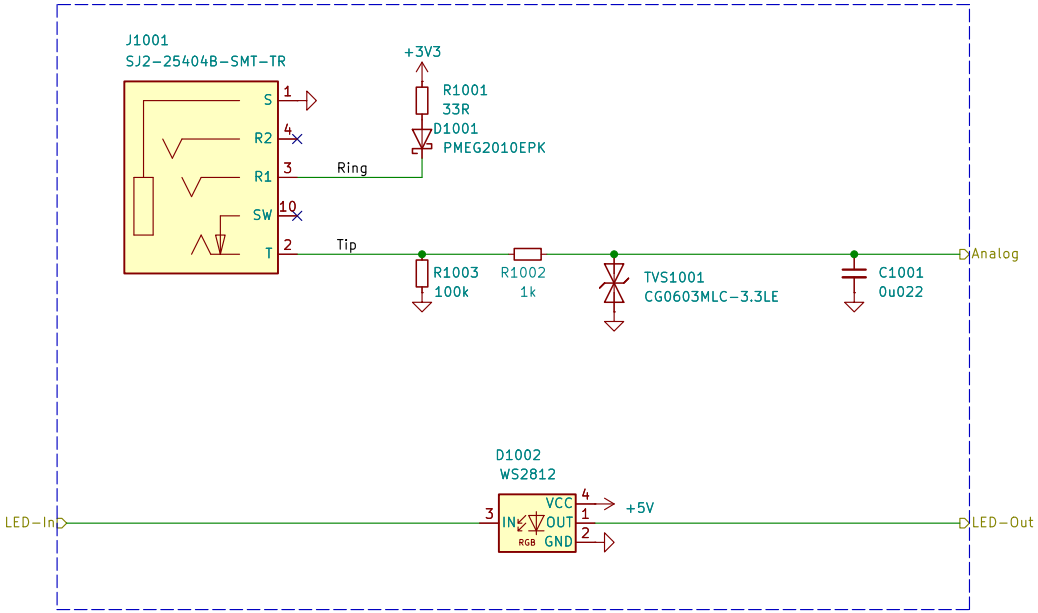

V2 express
Versio Duo

Revision: 2026-03-30
Id: 10/19
Sheet: Expression Input 9
Updated: 2026-03-30

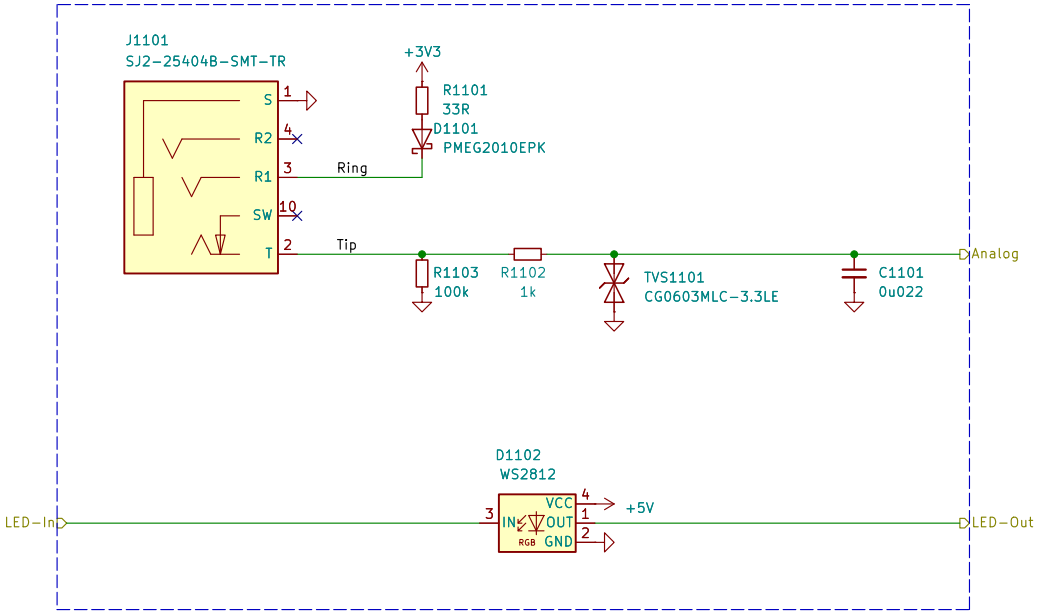

V2 express
Versio Duo

Revision: 2026-03-30
Id: 11/19
Sheet: Expression Input 10
Updated: 2026-03-30

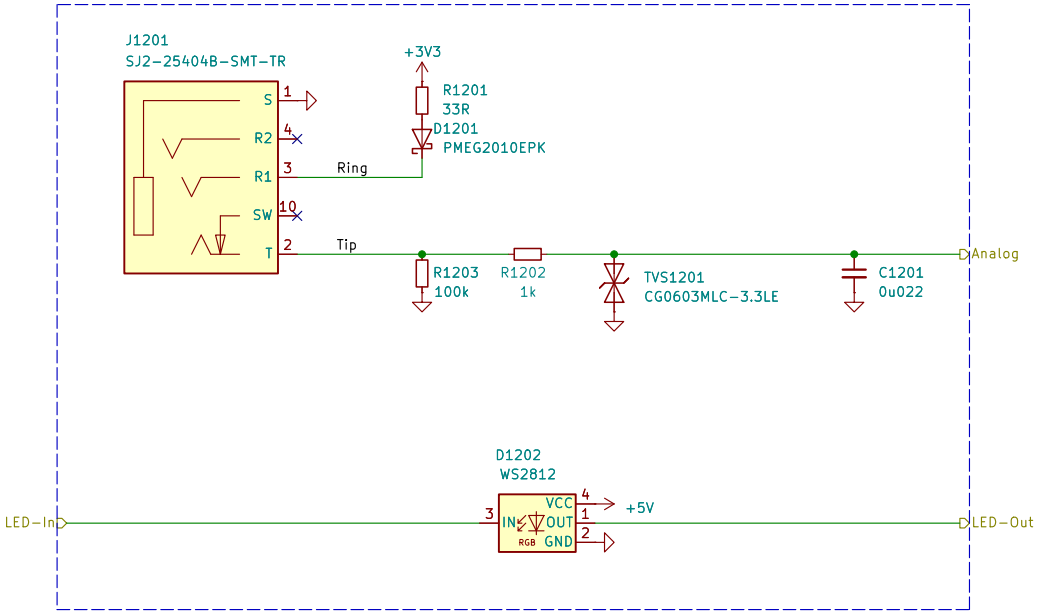

V2 express
Versio Duo

Revision: 2026-03-30
Id: 12/19
Sheet: Expression Input 11
Updated: 2026-03-30

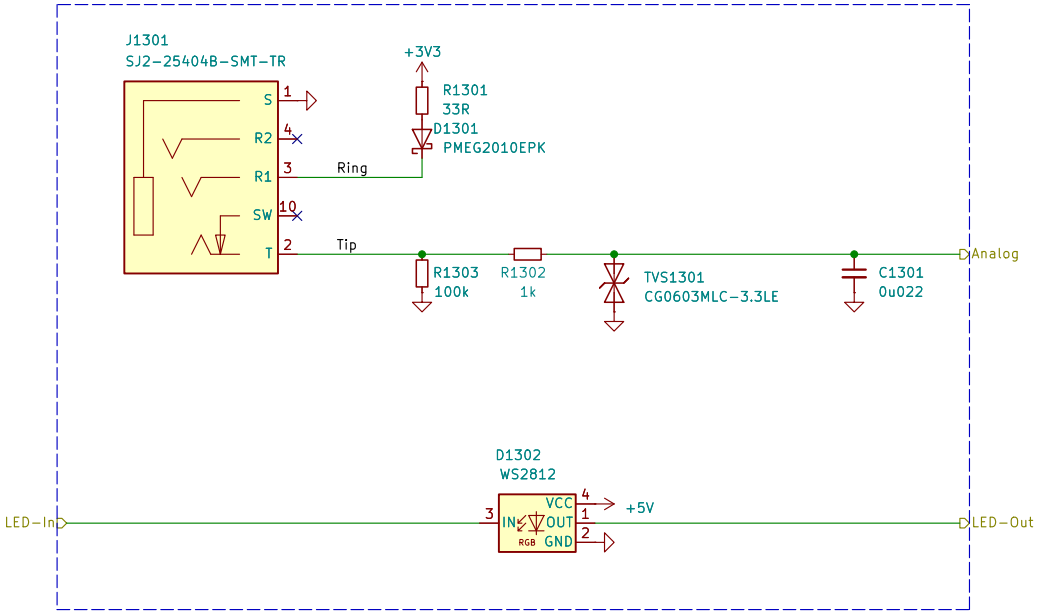

V2 express
Versio Duo

Revision: 2026-03-30
Id: 13/19
Sheet: Expression Input 12
Updated: 2026-03-30

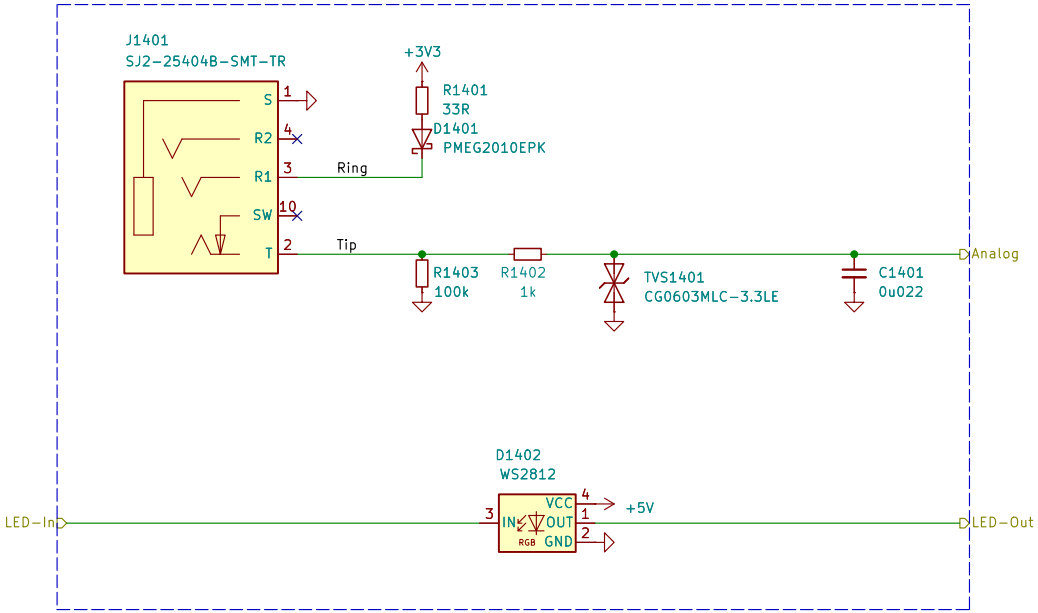

V2 express
Versio Duo

Revision: 2026-03-30
Id: 14/19
Sheet: Expression Input 13
Updated: 2026-03-30

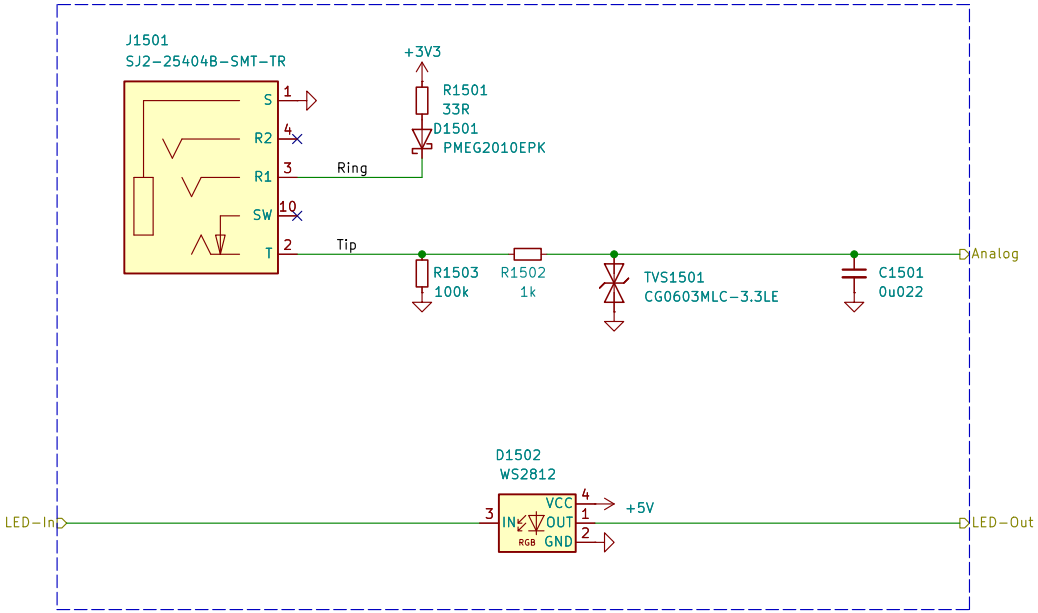

V2 express
Versio Duo

Revision: 2026-03-30
Id: 15/19
Sheet: Expression Input 14
Updated: 2026-03-30

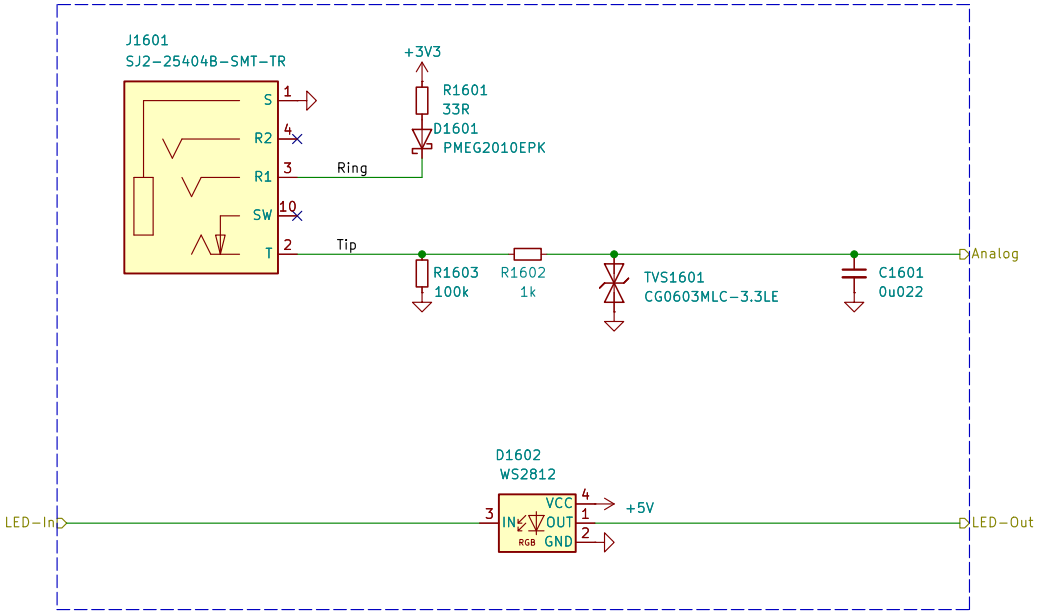

V2 express
Versio Duo

Revision: 2026-03-30
Id: 16/19
Sheet: Expression Input 15
Updated: 2026-03-30

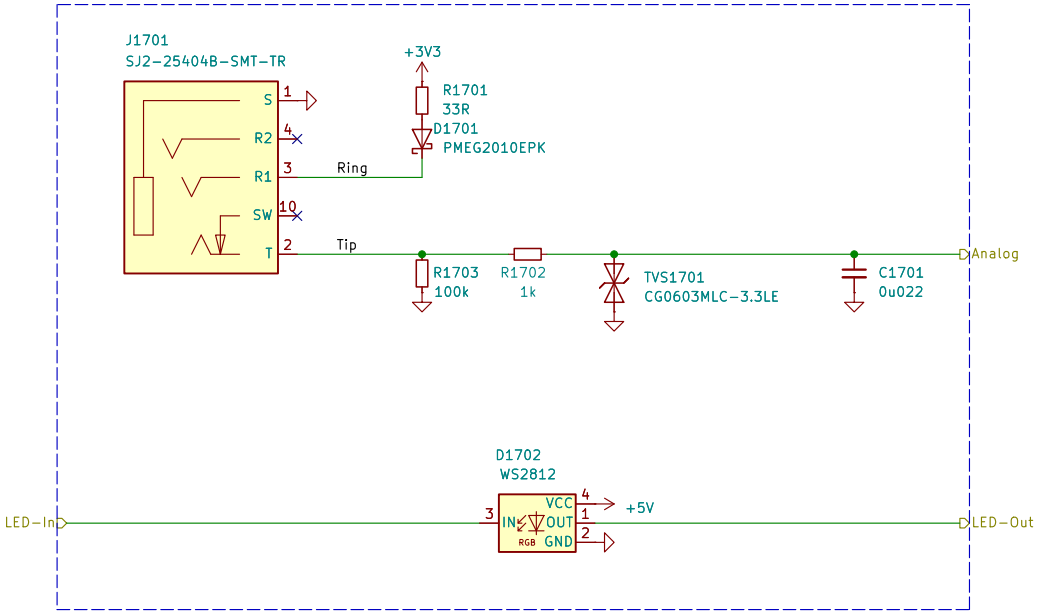

V2 express
Versio Duo

Revision: 2026-03-30
Id: 17/19
Sheet: Expression Input 16
Updated: 2026-03-30

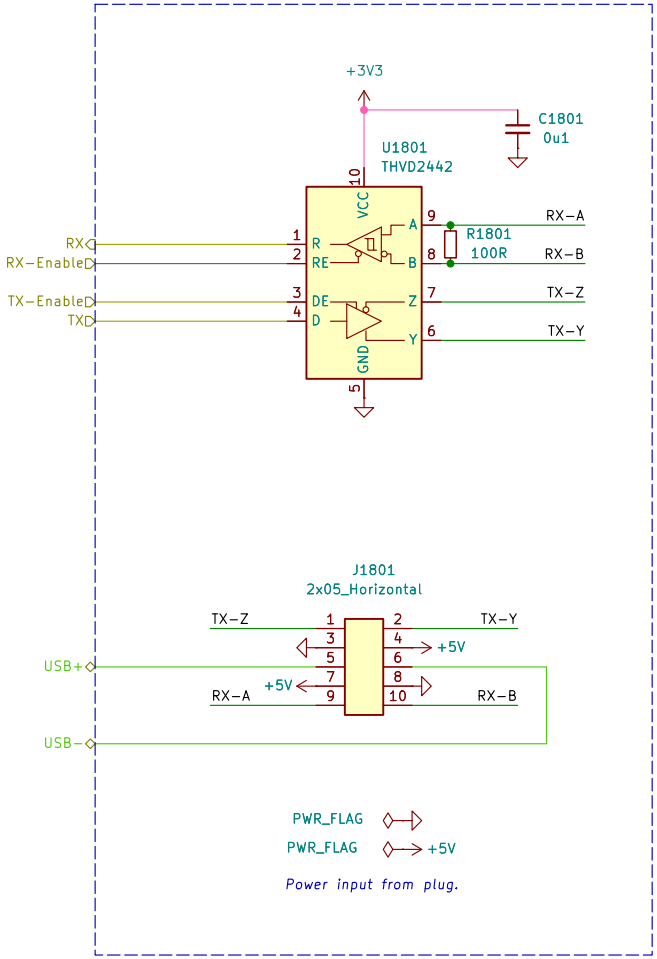

V2 express
Plug

Revision: 2026-03-30
Id: 18/19
Sheet: Link Plug
Updated: 2026-03-30

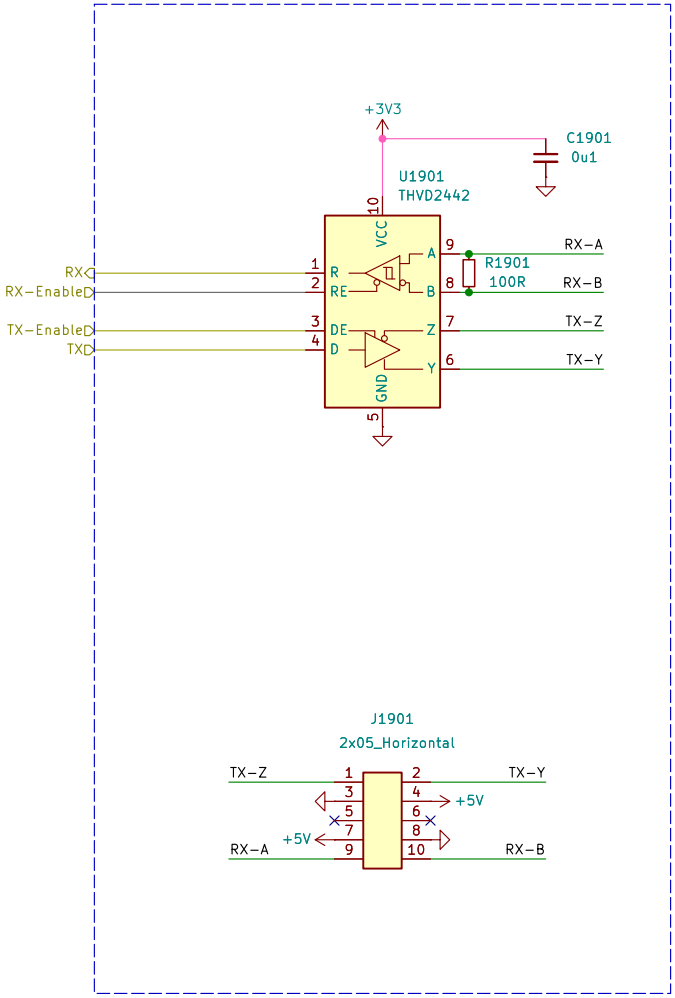

V2 express
Socket

Revision: 2026-03-30
Id: 19/19
Sheet: Link Socket
Updated: 2026-03-30