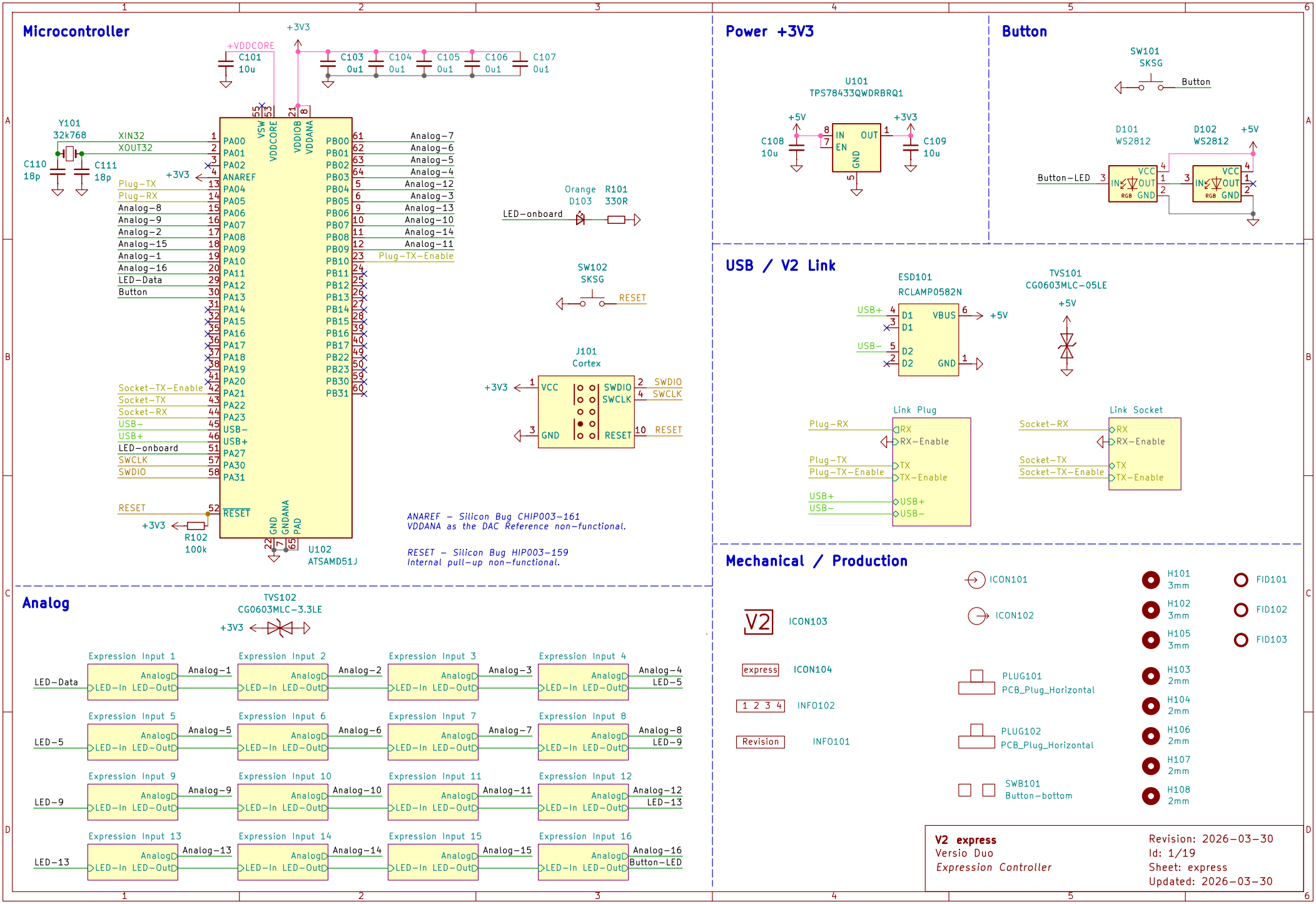
Microcontroller
+VDDCORE
C101 10u
+3V3
C103 0u1
C104 0u1
C105 0u1
C106 0u1
C107 0u1
Y101 32k768
C110 18p
C111 18p
XIN32
XOUT32
U102 ATSAMD51J
PA00 PA01 PA02 ANAREF PA04 PA05 PA06 PA07 PA08 PA09 PA10 PA11 PA12 PA13 PA14 PA15 PA16 PA17 PA18 PA19 PA20 PA21 PA22 PA23 USB− USB+ PA27 PA30 PA31
PB00 PB01 PB02 PB03 PB04 PB05 PB06 PB07 PB08 PB09 PB10 PB11 PB12 PB13 PB14 PB15 PB16 PB17 PB22 PB23 PB30 PB31
Plug−TX
Plug−RX
Analog−8
Analog−9
Analog−2
Analog−15
Analog−1
Analog−16
LED−Data
Button
Socket−TX−Enable
Socket−TX
Socket−RX
USB−
USB+
LED−onboard
SWCLK
SWDIO
RESET
R102 100k
Analog−7
Analog−6
Analog−5
Analog−4
Analog−12
Analog−3
Analog−13
Analog−10
Analog−14
Analog−11
Plug−TX−Enable
Orange D103
R101 330R
SW102 SKSG
J101 Cortex
VCC
GND
SWDIO
SWCLK
RESET
ANAREF − Silicon Bug CHIP003−161
VDDANA as the DAC Reference non−functional.
RESET − Silicon Bug HIP003−159
Internal pull−up non−functional.
Power +3V3
U101 TPS78433QWDRBRQ1
+5V
C108 10u
IN EN OUT GND
C109 10u
Button
SW101 SKSG
D101 WS2812
D102 WS2812
Button−LED
VCC IN OUT GND RGB
USB / V2 Link
ESD101 RCLAMP0582N
D1 D1 D2 D2 VBUS GND
TVS101 CG0603MLC−05LE
Link Plug
RX RX−Enable TX TX−Enable USB+ USB−
Link Socket
Mechanical / Production
ICON101
ICON102
ICON103
ICON104
INFO102
INFO101
PLUG101 PCB_Plug_Horizontal
PLUG102 PCB_Plug_Horizontal
SWB101 Button−bottom
H101 3mm
H102 3mm
H105 3mm
H103 2mm
H104 2mm
H106 2mm
H107 2mm
H108 2mm
FID101
FID102
FID103
V2 express
Versio Duo
Expression Controller
Revision: 2026−03−30
Id: 1/19
Sheet: express
Updated: 2026−03−30
Analog
TVS102 CG0603MLC−3.3LE
Expression Input 1
Expression Input 2
Expression Input 3
Expression Input 4
Expression Input 5
Expression Input 6
Expression Input 7
Expression Input 8
Expression Input 9
Expression Input 10
Expression Input 11
Expression Input 12
Expression Input 13
Expression Input 14
Expression Input 15
Expression Input 16
Analog LED−In LED−Out
LED−Data
LED−5
LED−9
LED−13
Analog−1
Analog−2
Analog−3
Analog−4
Analog−5
Analog−6
Analog−7
Analog−8
Analog−9
Analog−10
Analog−11
Analog−12
Analog−13
Analog−14
Analog−15
Analog−16
Button−LED

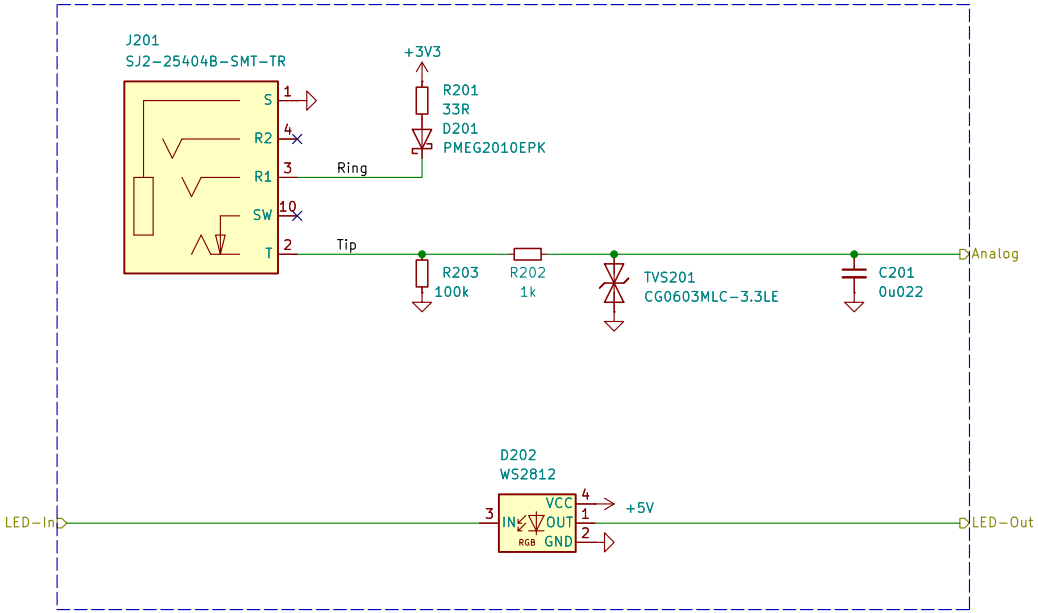

V2 express
Versio Duo

Revision: 2026-03-30
Id: 2/19
Sheet: Expression Input 1
Updated: 2026-03-30

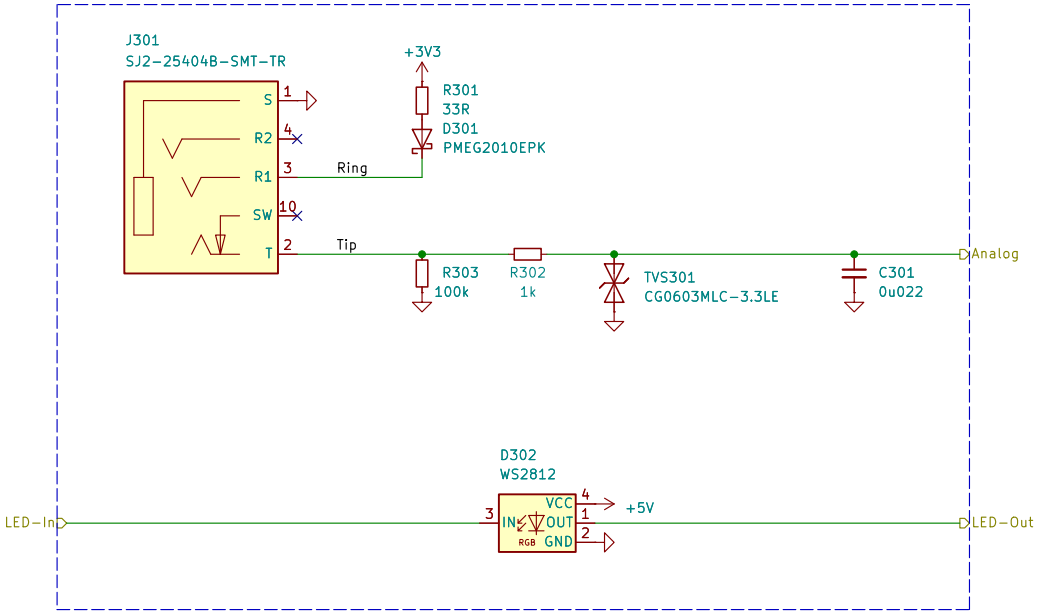

V2 express
Versio Duo

Revision: 2026-03-30
Id: 3/19
Sheet: Expression Input 2
Updated: 2026-03-30

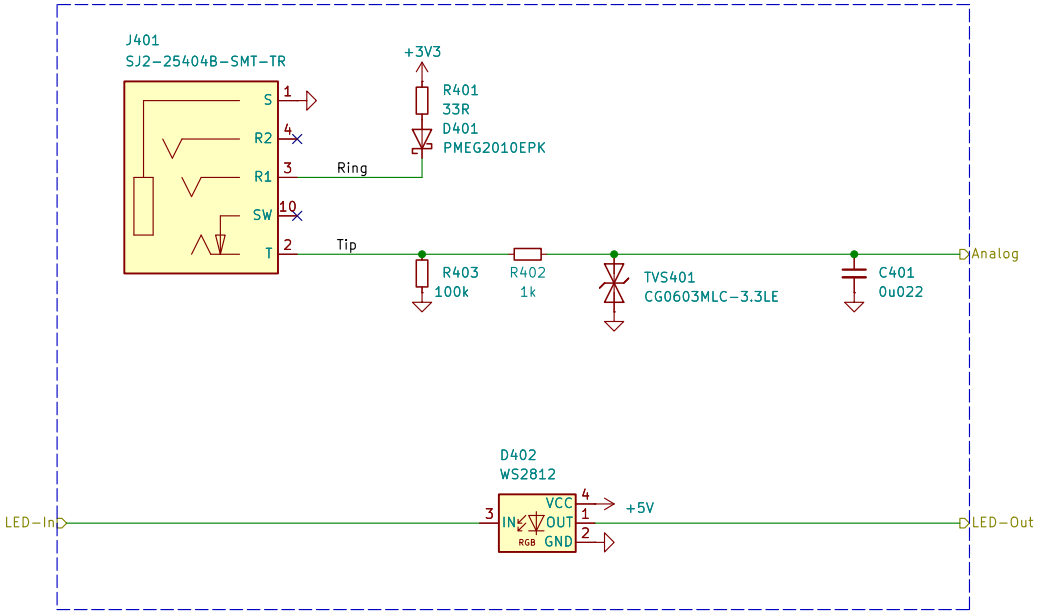

V2 express
Versio Duo

Revision: 2026-03-30
Id: 4/19
Sheet: Expression Input 3
Updated: 2026-03-30

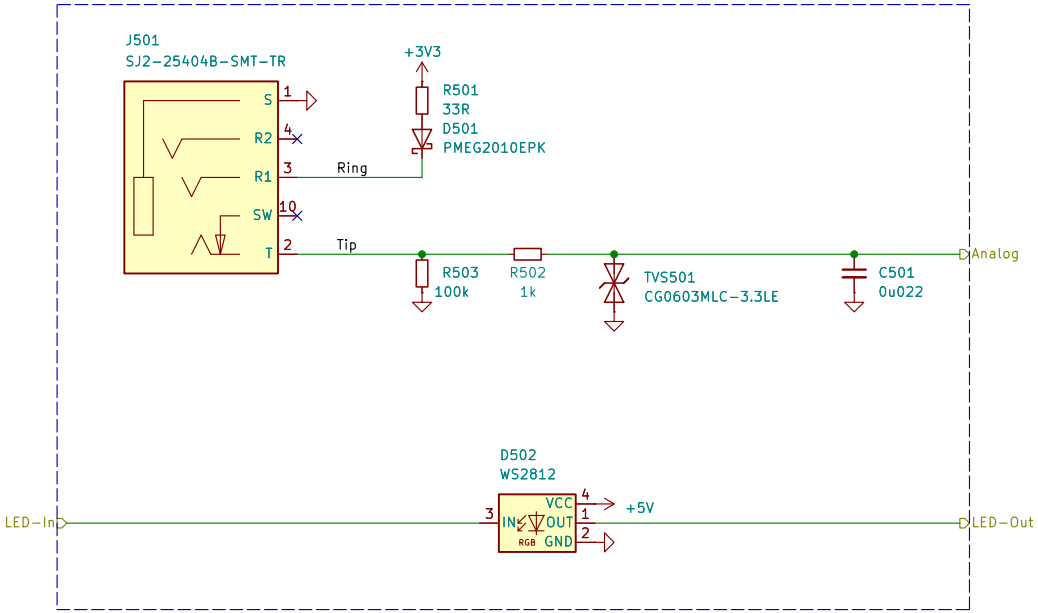

V2 express
Versio Duo

Revision: 2026-03-30
Id: 5/19
Sheet: Expression Input 4
Updated: 2026-03-30

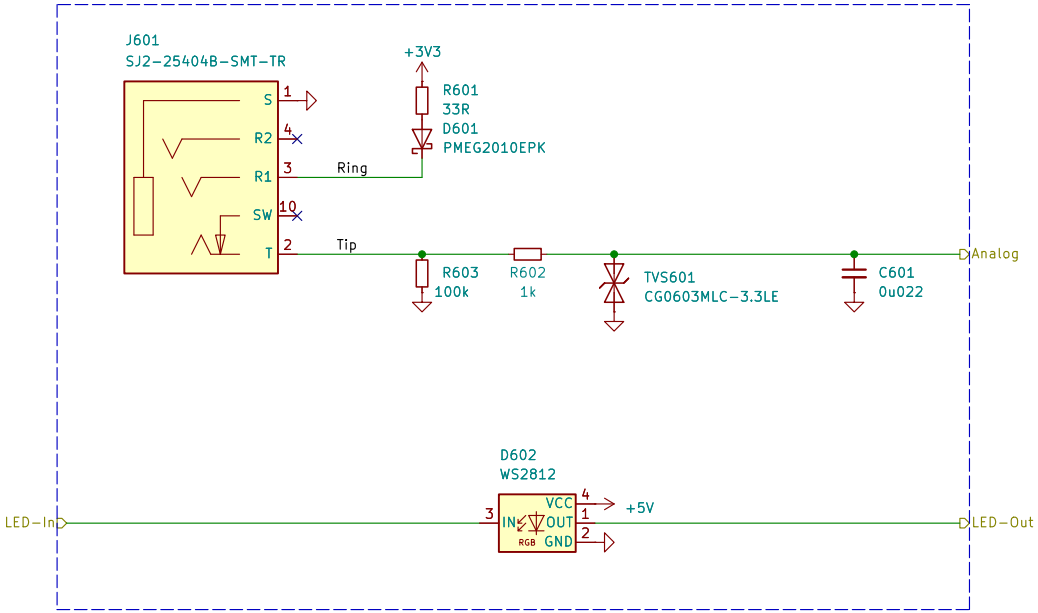

V2 express
Versio Duo

Revision: 2026-03-30
Id: 6/19
Sheet: Expression Input 5
Updated: 2026-03-30

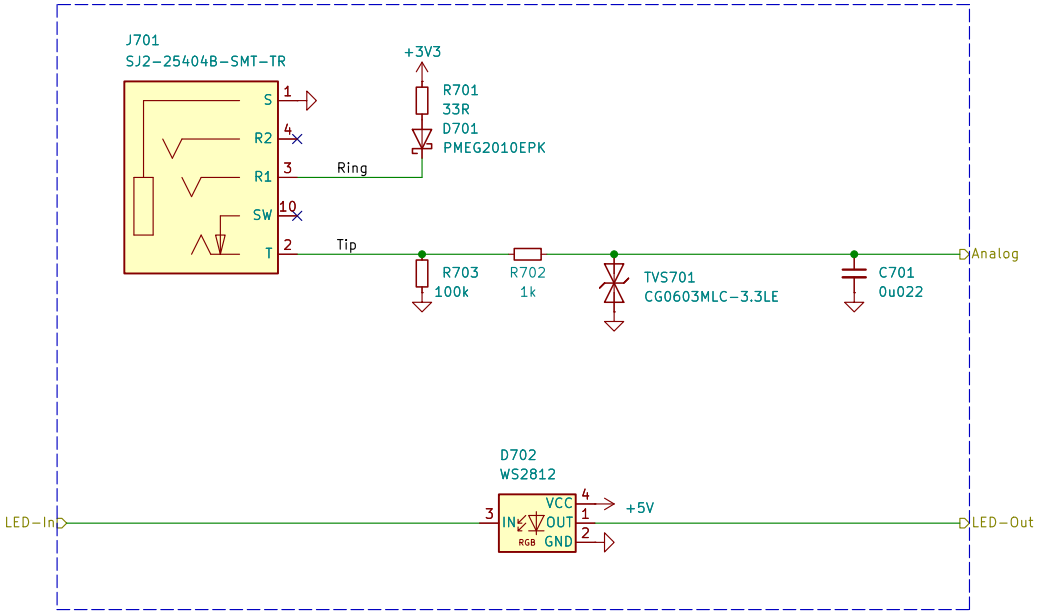

V2 express
Versio Duo

Revision: 2026-03-30
Id: 7/19
Sheet: Expression Input 6
Updated: 2026-03-30

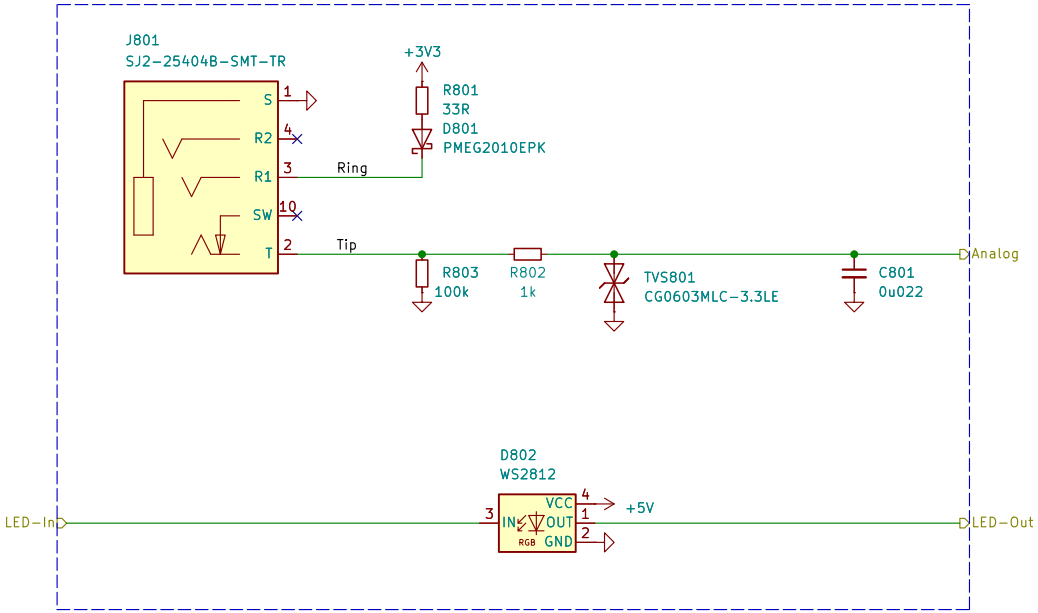

V2 express
Versio Duo

Revision: 2026-03-30
Id: 8/19
Sheet: Expression Input 7
Updated: 2026-03-30

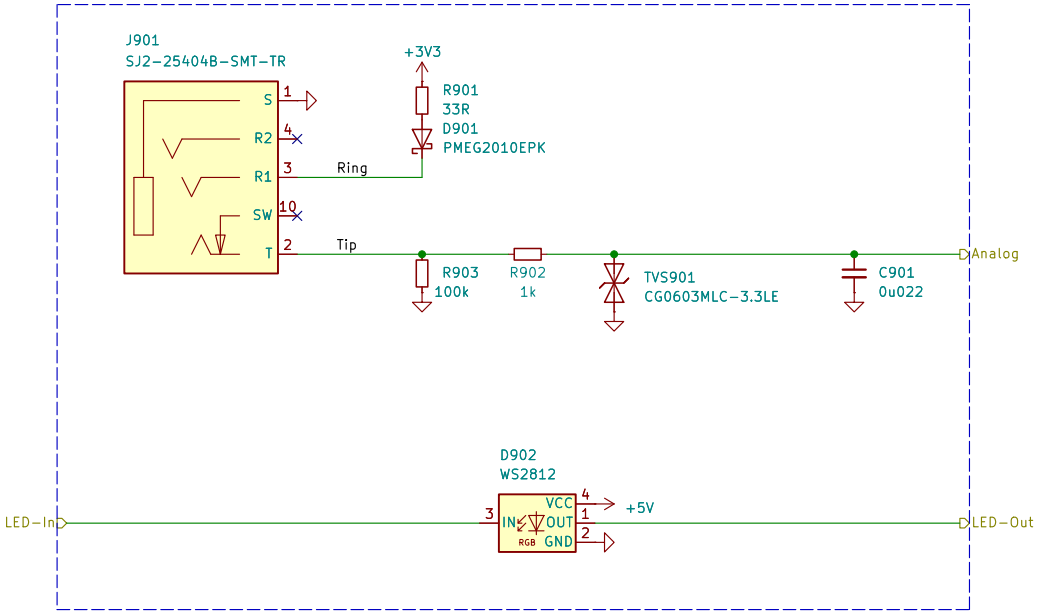

V2 express
Versio Duo

Revision: 2026-03-30
Id: 9/19
Sheet: Expression Input 8
Updated: 2026-03-30

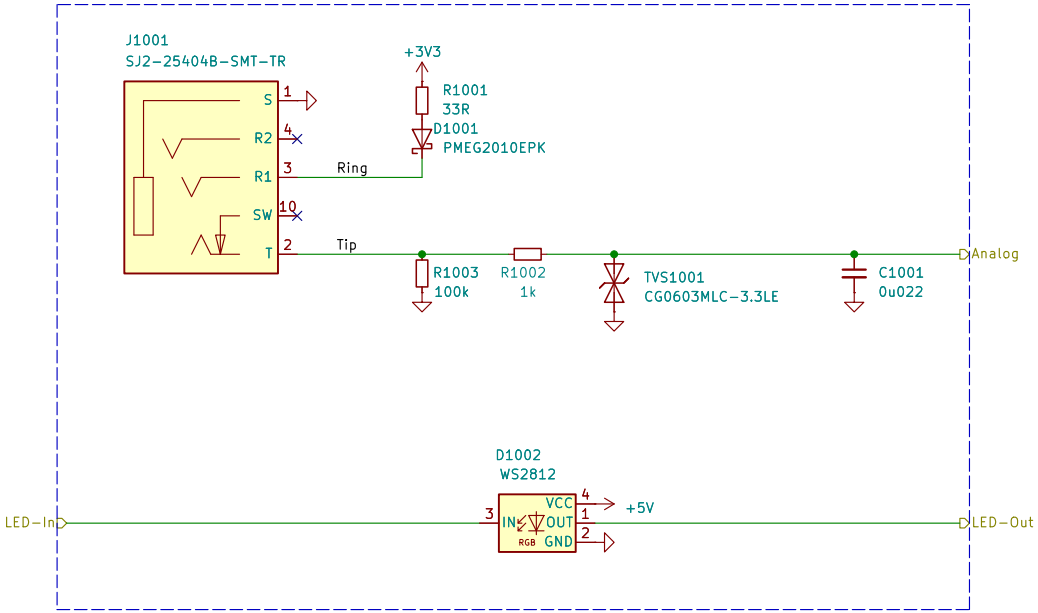

V2 express
Versio Duo

Revision: 2026-03-30
Id: 10/19
Sheet: Expression Input 9
Updated: 2026-03-30

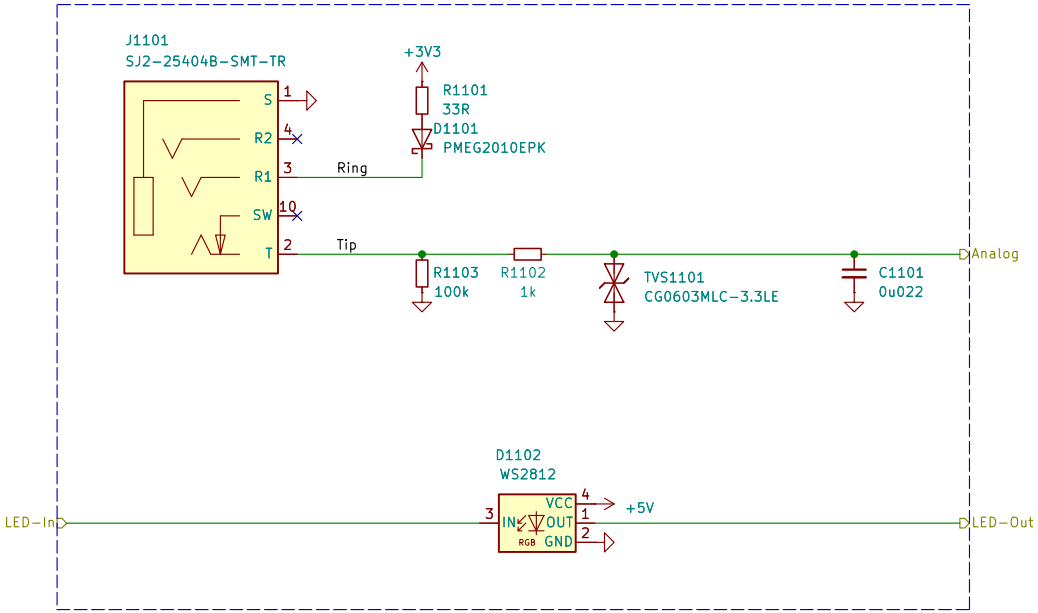

V2 express
Versio Duo

Revision: 2026-03-30
Id: 11/19
Sheet: Expression Input 10
Updated: 2026-03-30

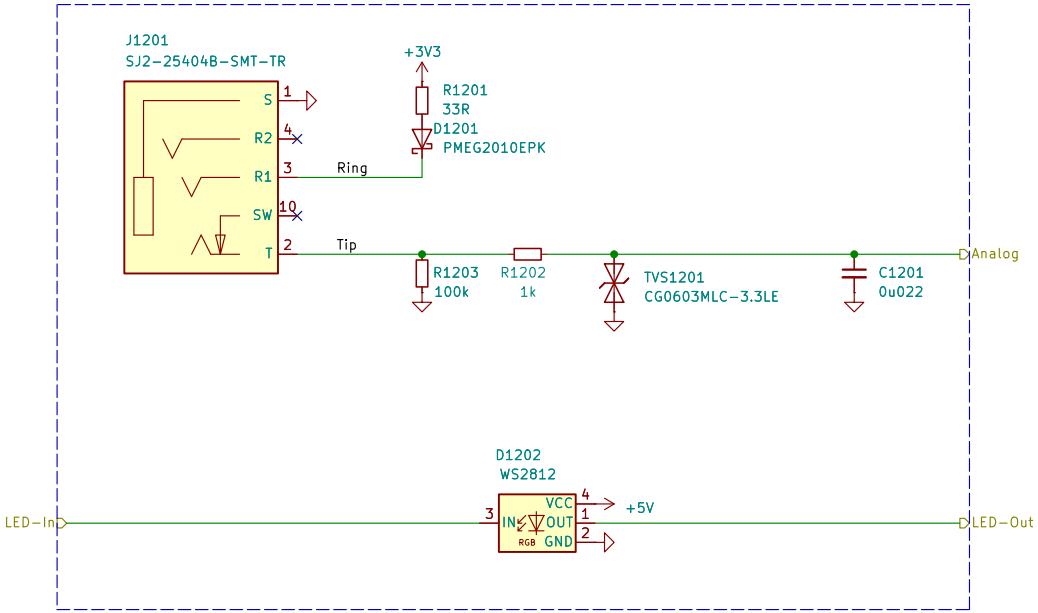

V2 express
Versio Duo

Revision: 2026-03-30
Id: 12/19
Sheet: Expression Input 11
Updated: 2026-03-30

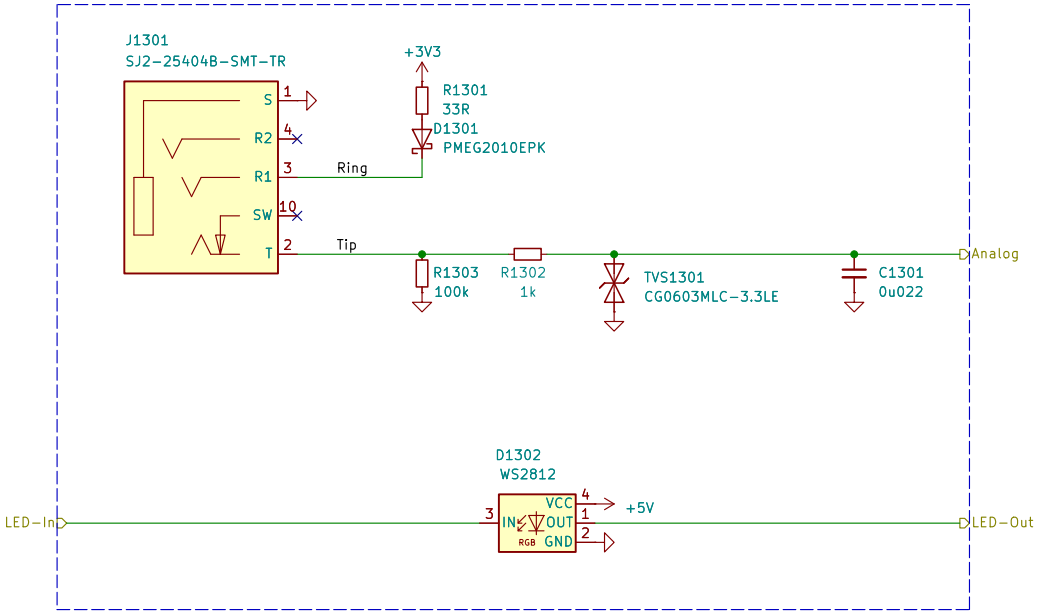

V2 express
Versio Duo

Revision: 2026-03-30
Id: 13/19
Sheet: Expression Input 12
Updated: 2026-03-30

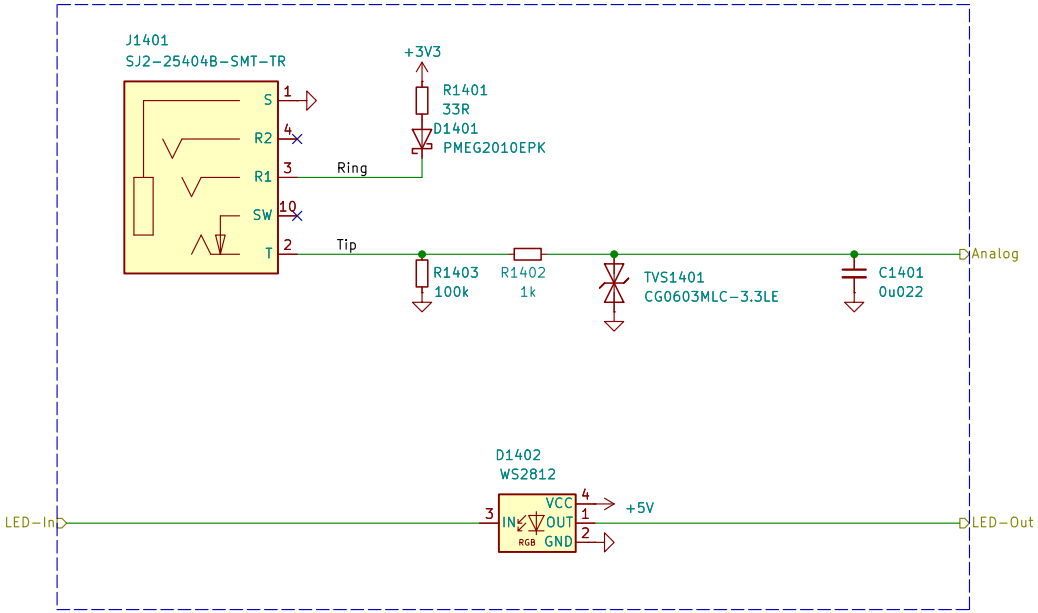

V2 express
Versio Duo

Revision: 2026-03-30
Id: 14/19
Sheet: Expression Input 13
Updated: 2026-03-30

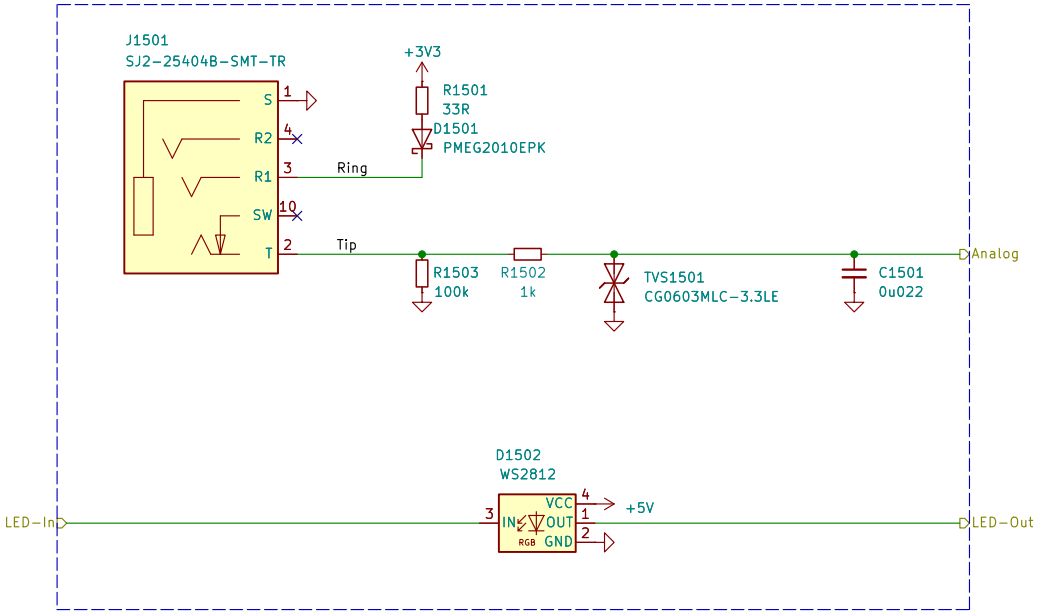

V2 express
Versio Duo

Revision: 2026-03-30
Id: 15/19
Sheet: Expression Input 14
Updated: 2026-03-30

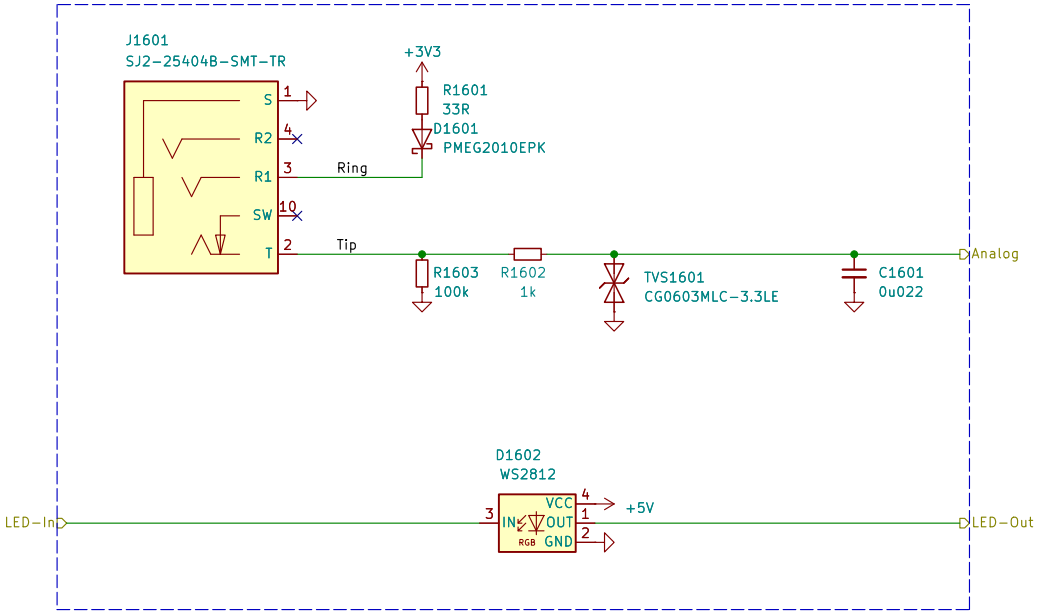

V2 express
Versio Duo

Revision: 2026-03-30
Id: 16/19
Sheet: Expression Input 15
Updated: 2026-03-30

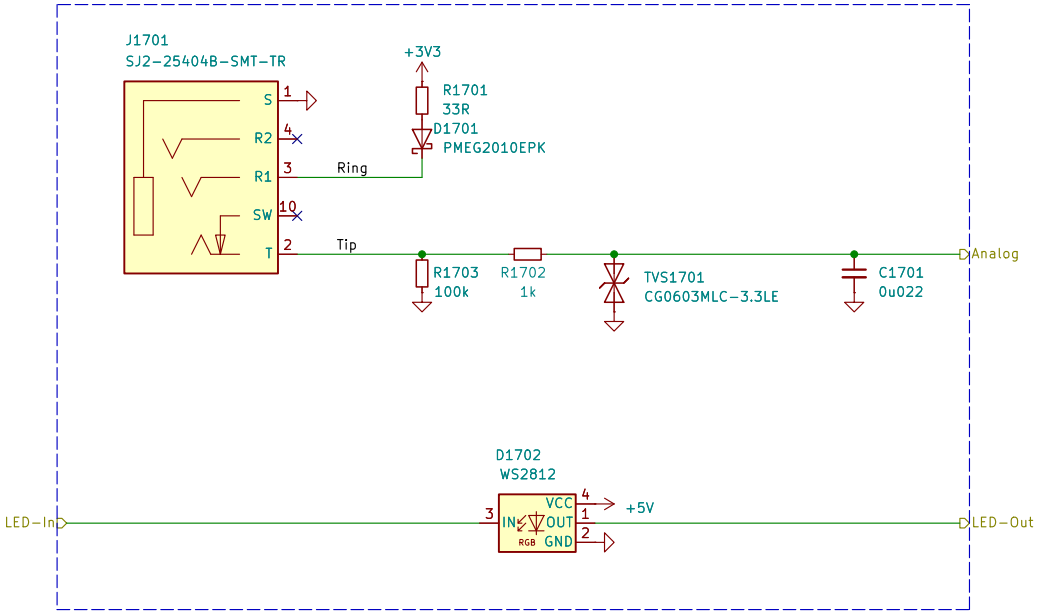

V2 express
Versio Duo

Revision: 2026-03-30
Id: 17/19
Sheet: Expression Input 16
Updated: 2026-03-30

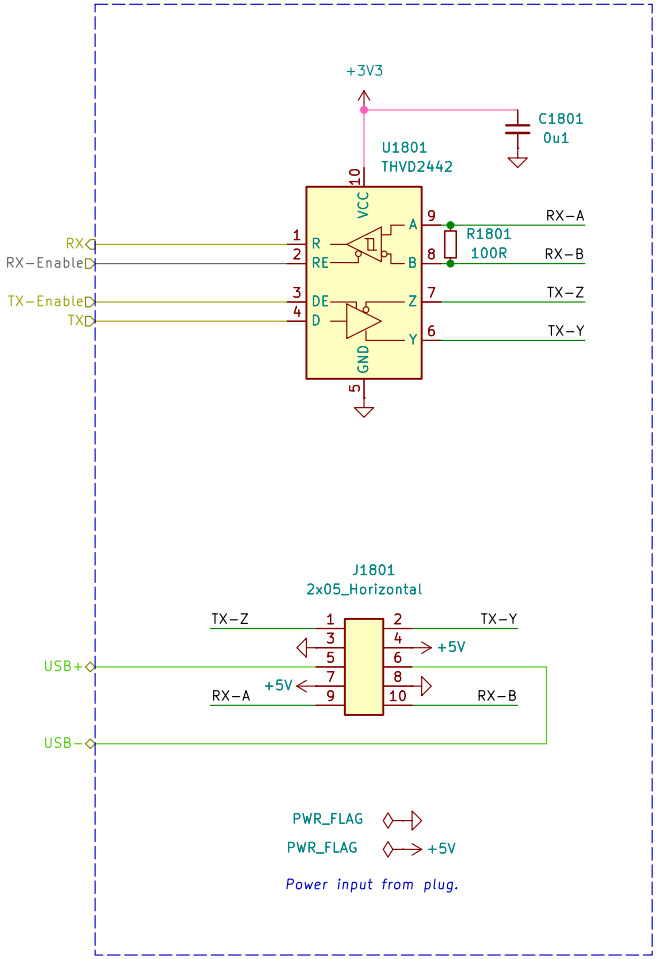

V2 express
Plug

Revision: 2026-03-30
Id: 18/19
Sheet: Link Plug
Updated: 2026-03-30

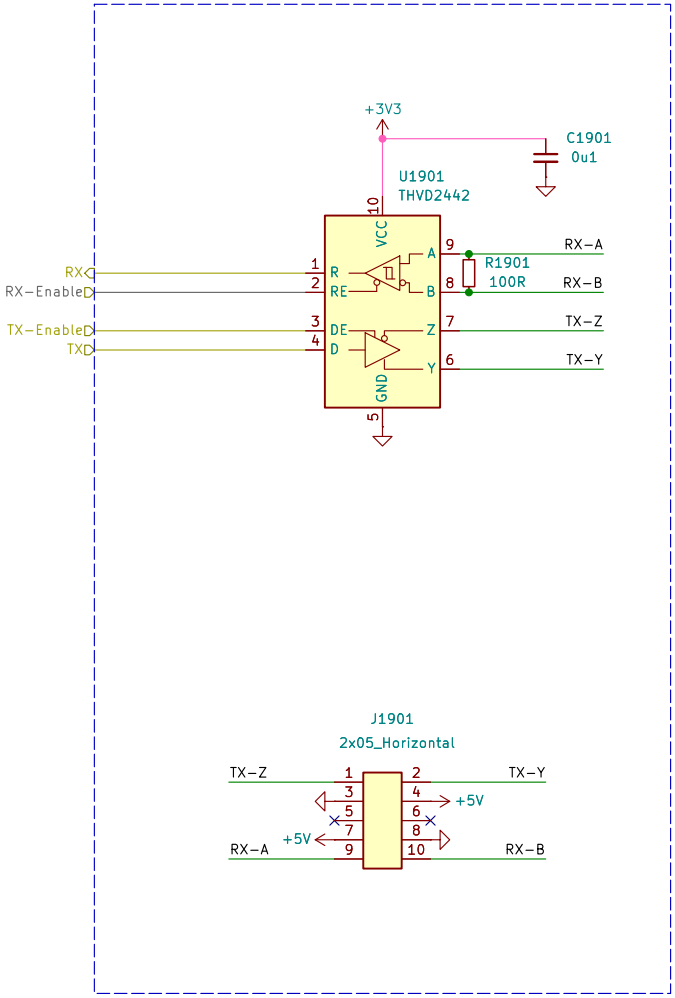

V2 express
Socket

Revision: 2026-03-30
Id: 19/19
Sheet: Link Socket
Updated: 2026-03-30