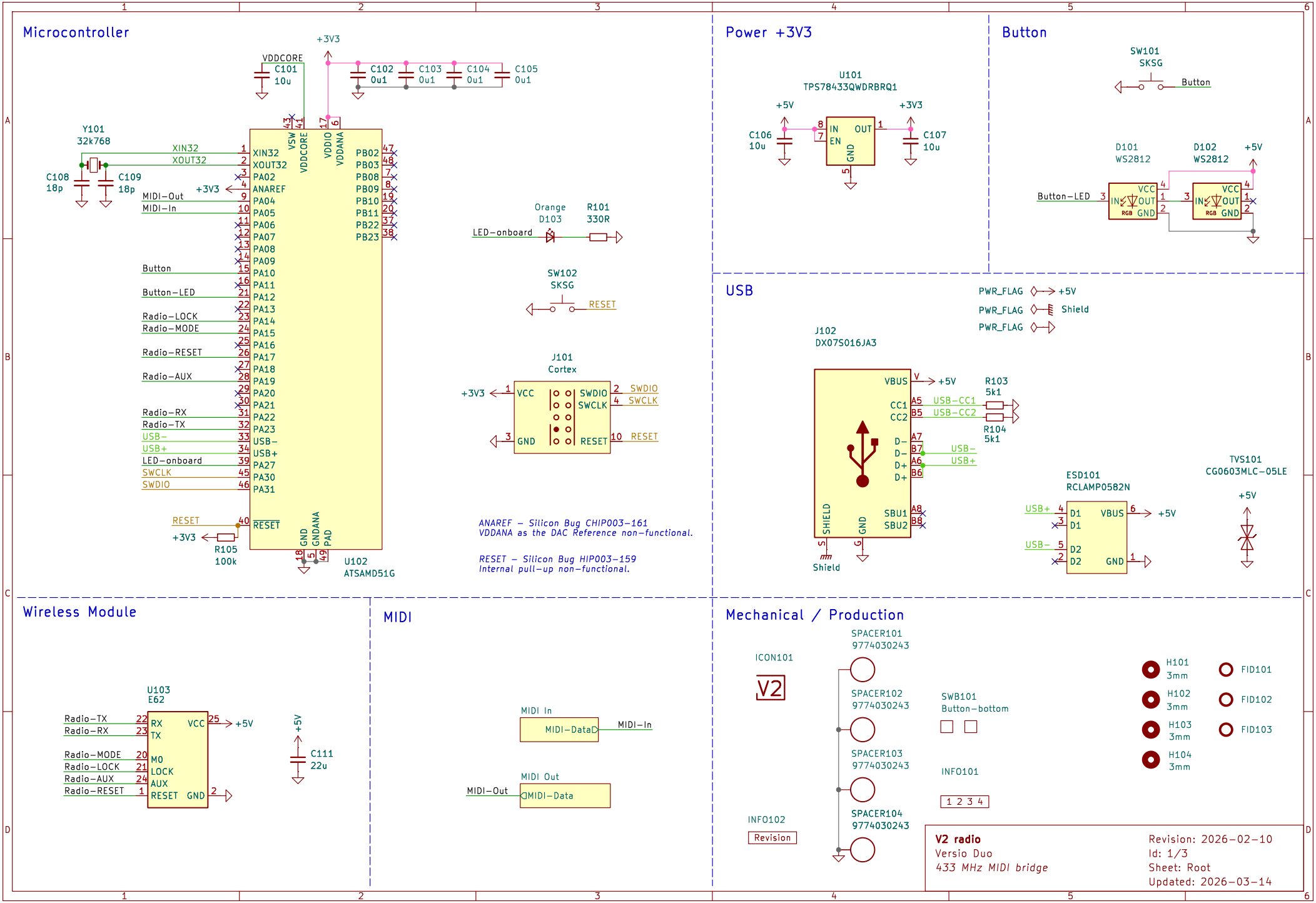
Microcontroller
+3V3
VDDCORE
C101
10u
C102
0u1
C103
0u1
C104
0u1
C105
0u1
Y101
32k768
C108
18p
C109
18p
XIN32
XOUT32
MIDI-Out
MIDI-In
Button
Button-LED
Radio-LOCK
Radio-MODE
Radio-RESET
Radio-AUX
Radio-RX
Radio-TX
USB-
USB+
LED-onboard
SWCLK
SWDIO
RESET
R105
100k
U102
ATSAMD51G
Orange
D103
R101
330R
SW102
SKSG
J101
Cortex
SWDIO
SWCLK
ANAREF – Silicon Bug CHIP003-161
VDDANA as the DAC Reference non-functional.
RESET – Silicon Bug HIP003-159
Internal pull-up non-functional.
Power +3V3
U101
TPS78433QWDRBRQ1
+5V
C106
10u
C107
10u
Button
SW101
SKSG
D101
WS2812
D102
WS2812
Button-LED
USB
PWR_FLAG
Shield
J102
DX07S016JA3
VBUS
CC1
CC2
D-
D+
SBU1
SBU2
SHIELD
GND
USB-CC1
USB-CC2
R103
5k1
R104
5k1
ESD101
RCLAMP0582N
TVS101
CG0603MLC-05LE
Wireless Module
U103
E62
Radio-TX
Radio-RX
Radio-MODE
Radio-LOCK
Radio-AUX
Radio-RESET
C111
22u
MIDI
MIDI In
MIDI-Data
MIDI-In
MIDI Out
MIDI-Out
Mechanical / Production
ICON101
V2
SPACER101
9774030243
SPACER102
9774030243
SPACER103
9774030243
SPACER104
9774030243
SWB101
Button-bottom
INFO101
INFO102
Revision
H101
3mm
H102
3mm
H103
3mm
H104
3mm
FID101
FID102
FID103
V2 radio
Versio Duo
433 MHz MIDI bridge
Revision: 2026-02-10
Id: 1/3
Sheet: Root
Updated: 2026-03-14

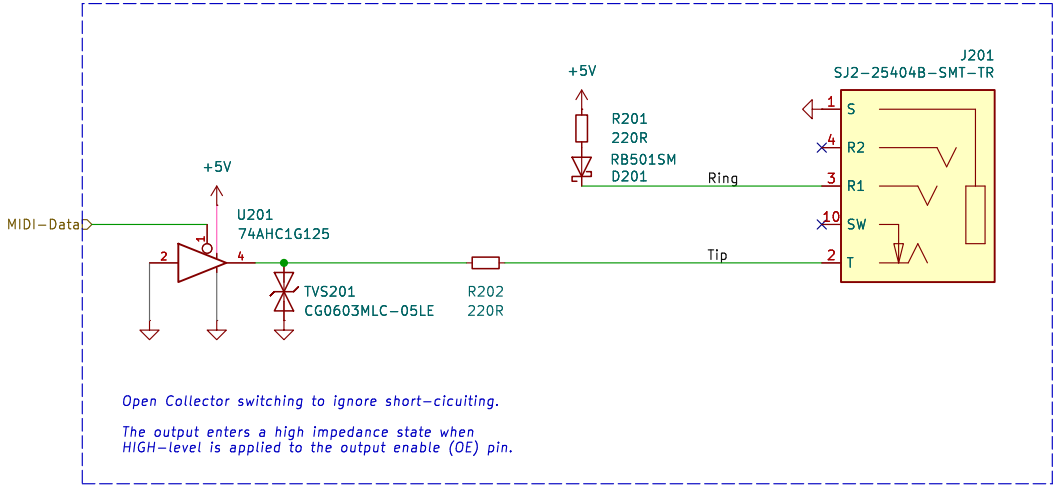

MIDI Out

Revision: 3
Id: 2/3
Sheet: MIDI Out
Updated: 2025-09-19

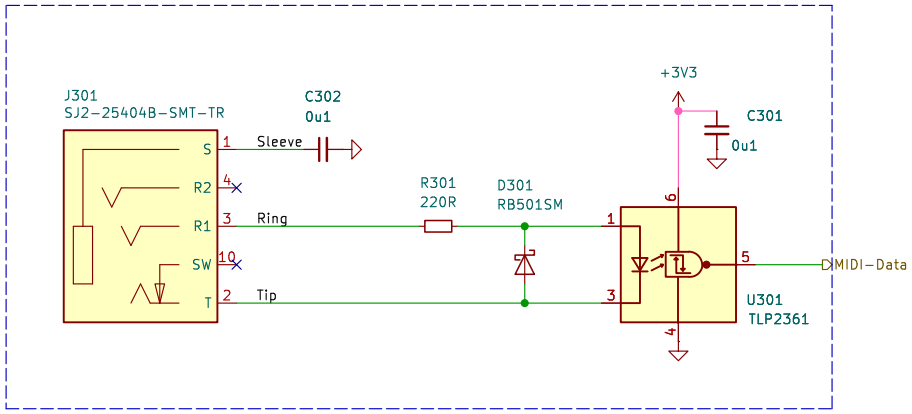

MIDI In

Revision: 3
Id: 3/3
Sheet: MIDI In
Updated: 2025-09-19