Trusted Platform Module

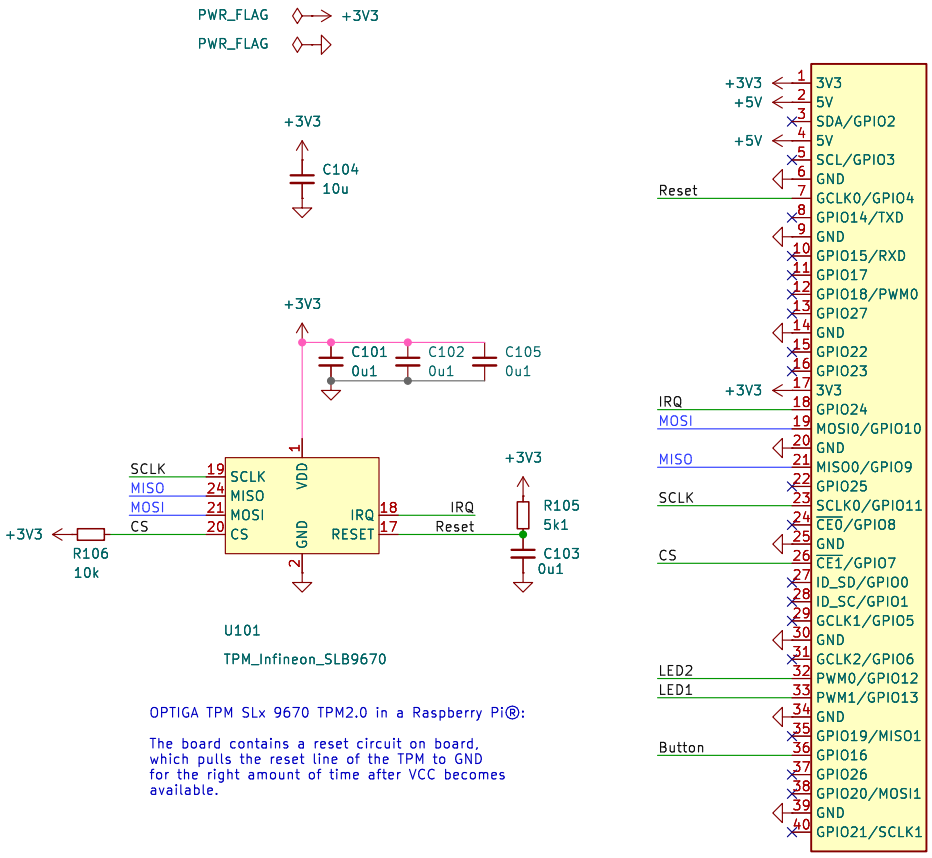

OPTIGA TPM SLx 9670 TPM2.0 in a Raspberry Pi®:

The board contains a reset circuit on board, which pulls the reset line of the TPM to GND for the right amount of time after VCC becomes available.

M.2 Connector / LTE

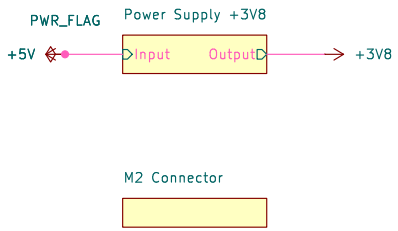

Button / LED

Mechanical / Production

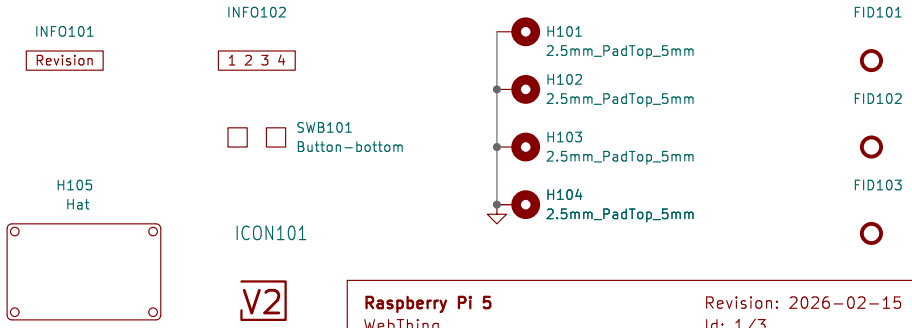

Raspberry Pi 5
WebThing
Trusted Platform Module

Revision: 2026-02-15
Id: 1/3
Sheet: Root
Updated: 2026-02-15

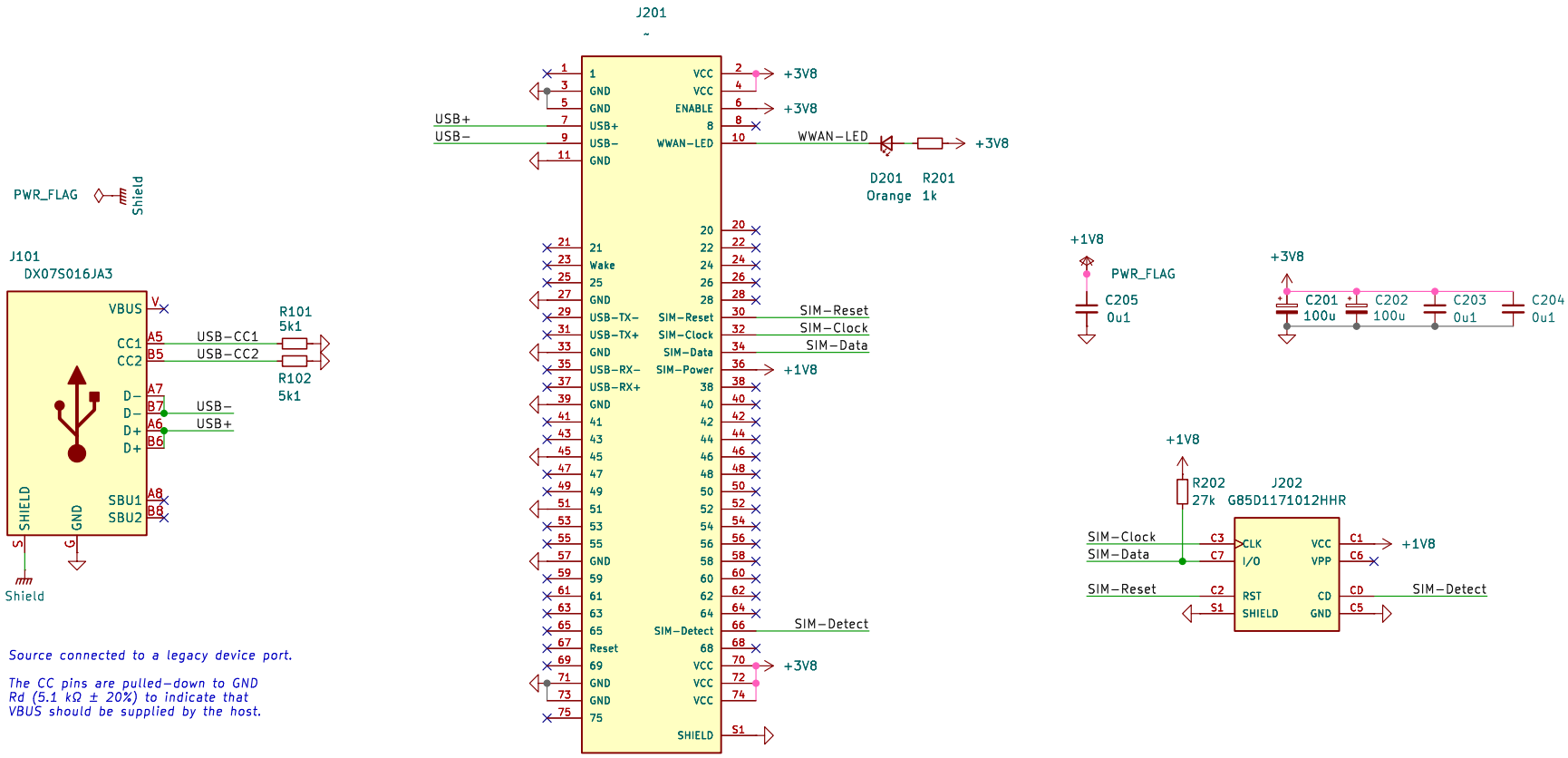

Raspberry Pi 5
WebThing
M.2 Connector / LTE

Revision: 2026−02−15
Id: 2/3
Sheet: M2 Connector
Updated: 2026−02−15

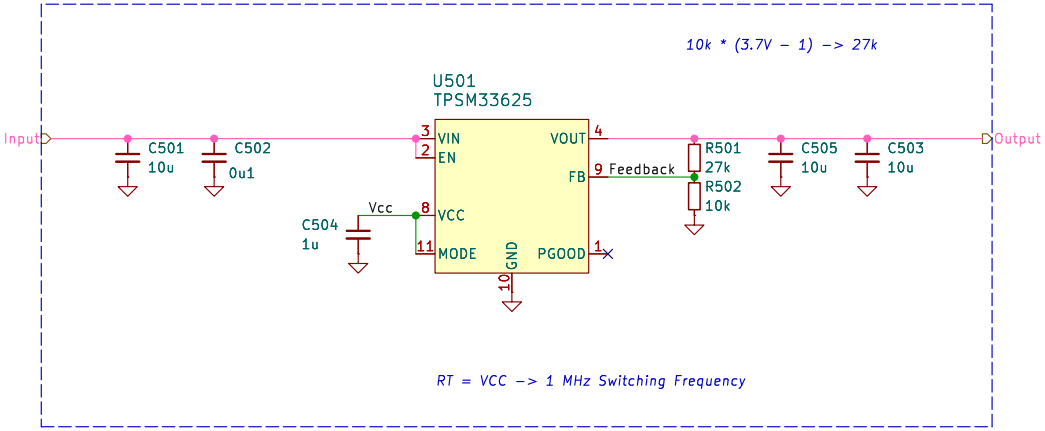

Power Supply
+3V7

Revision: 3
Id: 3/3
Sheet: Power Supply +3V8
Updated: 2024-03-28