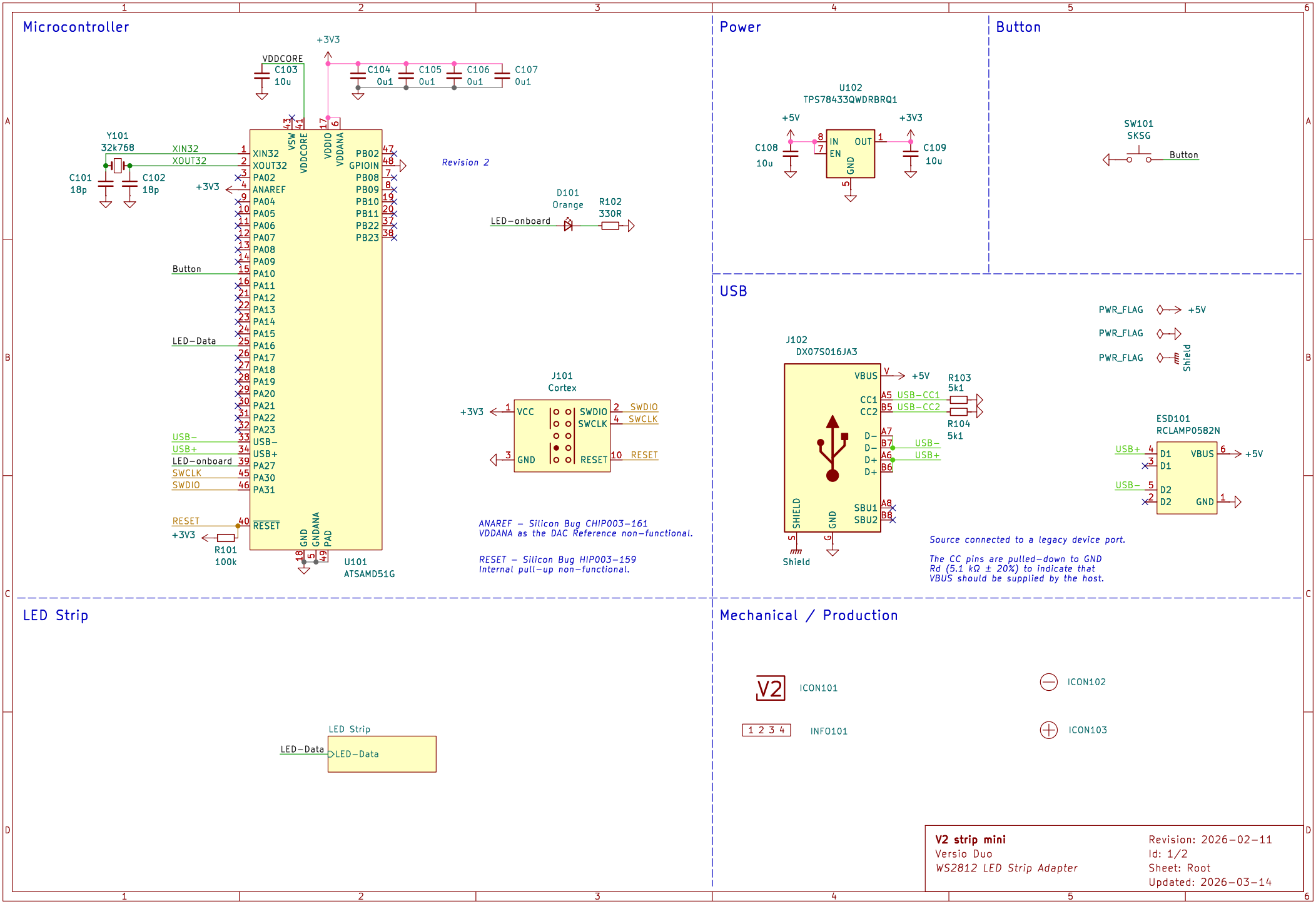
Microcontroller
+3V3
VDDCORE
C103
10u
C104
0u1
C105
0u1
C106
0u1
C107
0u1
Y101
32k768
C101
18p
C102
18p
XIN32
XOUT32
+3V3
Button
LED-Data
USB-
USB+
LED-onboard
SWCLK
SWDIO
RESET
+3V3
R101
100k
VSW
VDDCORE
VDDIO
VDDANA
XIN32
XOUT32
PA02
ANAREF
PA04
PA05
PA06
PA07
PA08
PA09
PA10
PA11
PA12
PA13
PA14
PA15
PA16
PA17
PA18
PA19
PA20
PA21
PA22
PA23
USB-
USB+
PA27
PA30
PA31
RESET
GND
GNDANA
PAD
PB02
GPIOIN
PB08
PB09
PB10
PB11
PB22
PB23
U101
ATSAMD51G
Revision 2
D101
Orange
R102
330R
LED-onboard
J101
Cortex
+3V3
VCC
GND
SWDIO
SWCLK
RESET
SWDIO
SWCLK
RESET
ANAREF – Silicon Bug CHIP003-161
VDDANA as the DAC Reference non-functional.
RESET – Silicon Bug HIP003-159
Internal pull-up non-functional.
Power
U102
TPS78433QWDRBRQ1
+5V
+3V3
C108
10u
IN
EN
OUT
GND
C109
10u
Button
SW101
SKSG
Button
USB
PWR_FLAG
+5V
PWR_FLAG
PWR_FLAG
Shield
J102
DX07S016JA3
VBUS
+5V
CC1
CC2
USB-CC1
USB-CC2
R103
5k1
R104
5k1
D-
D-
D+
D+
USB-
USB+
SHIELD
GND
SBU1
SBU2
Shield
ESD101
RCLAMP0582N
USB+
USB-
D1
D1
D2
D2
VBUS
GND
+5V
Source connected to a legacy device port.
The CC pins are pulled-down to GND
Rd (5.1 kΩ ± 20%) to indicate that
VBUS should be supplied by the host.
LED Strip
LED Strip
LED-Data
LED-Data
Mechanical / Production
V2
ICON101
ICON102
1 2 3 4
INFO101
ICON103
V2 strip mini
Versio Duo
WS2812 LED Strip Adapter
Revision: 2026-02-11
Id: 1/2
Sheet: Root
Updated: 2026-03-14

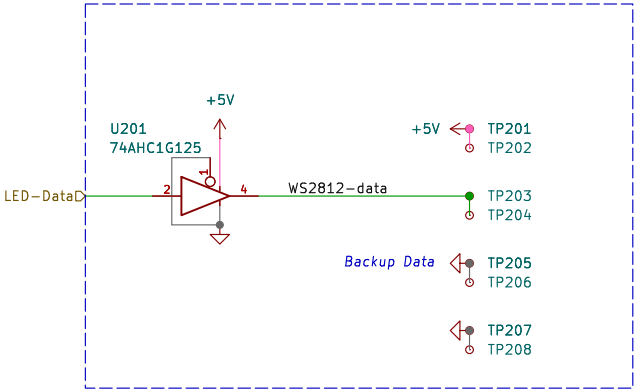

LED Strip
Versio Duo

Revision: 3
Id: 2/2
Sheet: LED Strip
Updated: 2023-05-07