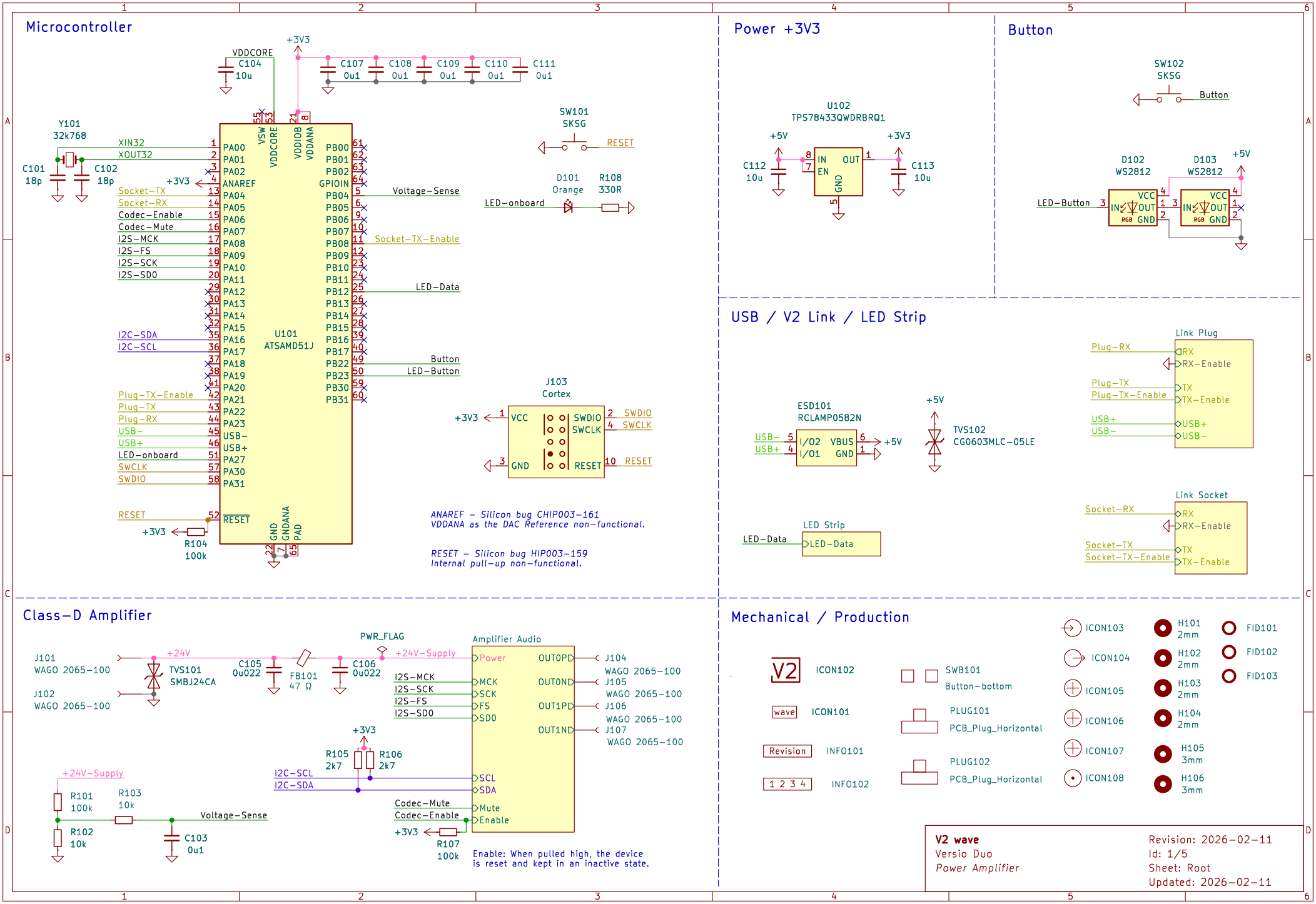
Microcontroller
VDDCORE
C104
10u
+3V3
C107 0u1
C108 0u1
C109 0u1
C110 0u1
C111 0u1
Y101
32k768
C101
18p
C102
18p
XIN32
XOUT32
+3V3
Socket-TX
Socket-RX
Codec-Enable
Codec-Mute
I2S-MCK
I2S-FS
I2S-SCK
I2S-SD0
I2C-SDA
I2C-SCL
Plug-TX-Enable
Plug-TX
Plug-RX
USB-
USB+
LED-onboard
SWCLK
SWDIO
RESET
+3V3
R104
100k
U101
ATSAMD51J
VSW
VDDCORE
VDDIOB
VDDANA
ANAREF
GPIOIN
USB-
USB+
RESET
GND
GNDANA
PAD
Voltage-Sense
Socket-TX-Enable
LED-Data
Button
LED-Button
SW101
SKSG
RESET
D101
Orange
R108
330R
LED-onboard
J103
Cortex
+3V3
VCC
GND
SWDIO
SWCLK
RESET
SWDIO
SWCLK
RESET
ANAREF – Silicon bug CHIP003-161
VDDANA as the DAC Reference non-functional.
RESET – Silicon bug HIP003-159
Internal pull-up non-functional.
Power +3V3
U102
TPS78433QWDRBRQ1
+5V
C112
10u
IN
EN
OUT
GND
+3V3
C113
10u
Button
SW102
SKSG
Button
D102
WS2812
D103
WS2812
+5V
LED-Button
VCC
IN
OUT
GND
RGB
USB / V2 Link / LED Strip
ESD101
RCLAMP0582N
USB-
USB+
I/O2
I/O1
VBUS
GND
+5V
+5V
TVS102
CG0603MLC-05LE
Link Plug
Plug-RX
RX
RX-Enable
Plug-TX
Plug-TX-Enable
TX
TX-Enable
USB+
USB-
LED Strip
LED-Data
LED-Data
Link Socket
Socket-RX
RX
RX-Enable
Socket-TX
Socket-TX-Enable
TX
TX-Enable
Class-D Amplifier
J101
WAGO 2065-100
J102
WAGO 2065-100
+24V
TVS101
SMBJ24CA
C105
0u022
FB101
47 Ω
C106
0u022
PWR_FLAG
+24V-Supply
Amplifier Audio
Power
MCK
SCK
FS
SD0
SCL
SDA
Mute
Enable
OUT0P
OUT0N
OUT1P
OUT1N
I2S-MCK
I2S-SCK
I2S-FS
I2S-SD0
J104
WAGO 2065-100
J105
WAGO 2065-100
J106
WAGO 2065-100
J107
WAGO 2065-100
+3V3
R105
2k7
R106
2k7
I2C-SCL
I2C-SDA
Codec-Mute
Codec-Enable
+3V3
R107
100k
+24V-Supply
R101
100k
R102
10k
R103
10k
Voltage-Sense
C103
0u1
Enable: When pulled high, the device
is reset and kept in an inactive state.
Mechanical / Production
V2
ICON102
wave
ICON101
Revision
INFO101
1 2 3 4
INFO102
SWB101
Button-bottom
PLUG101
PCB_Plug_Horizontal
PLUG102
PCB_Plug_Horizontal
ICON103
ICON104
ICON105
ICON106
ICON107
ICON108
H101
2mm
H102
2mm
H103
2mm
H104
2mm
H105
3mm
H106
3mm
FID101
FID102
FID103
V2 wave
Versio Duo
Power Amplifier
Revision: 2026-02-11
Id: 1/5
Sheet: Root
Updated: 2026-02-11

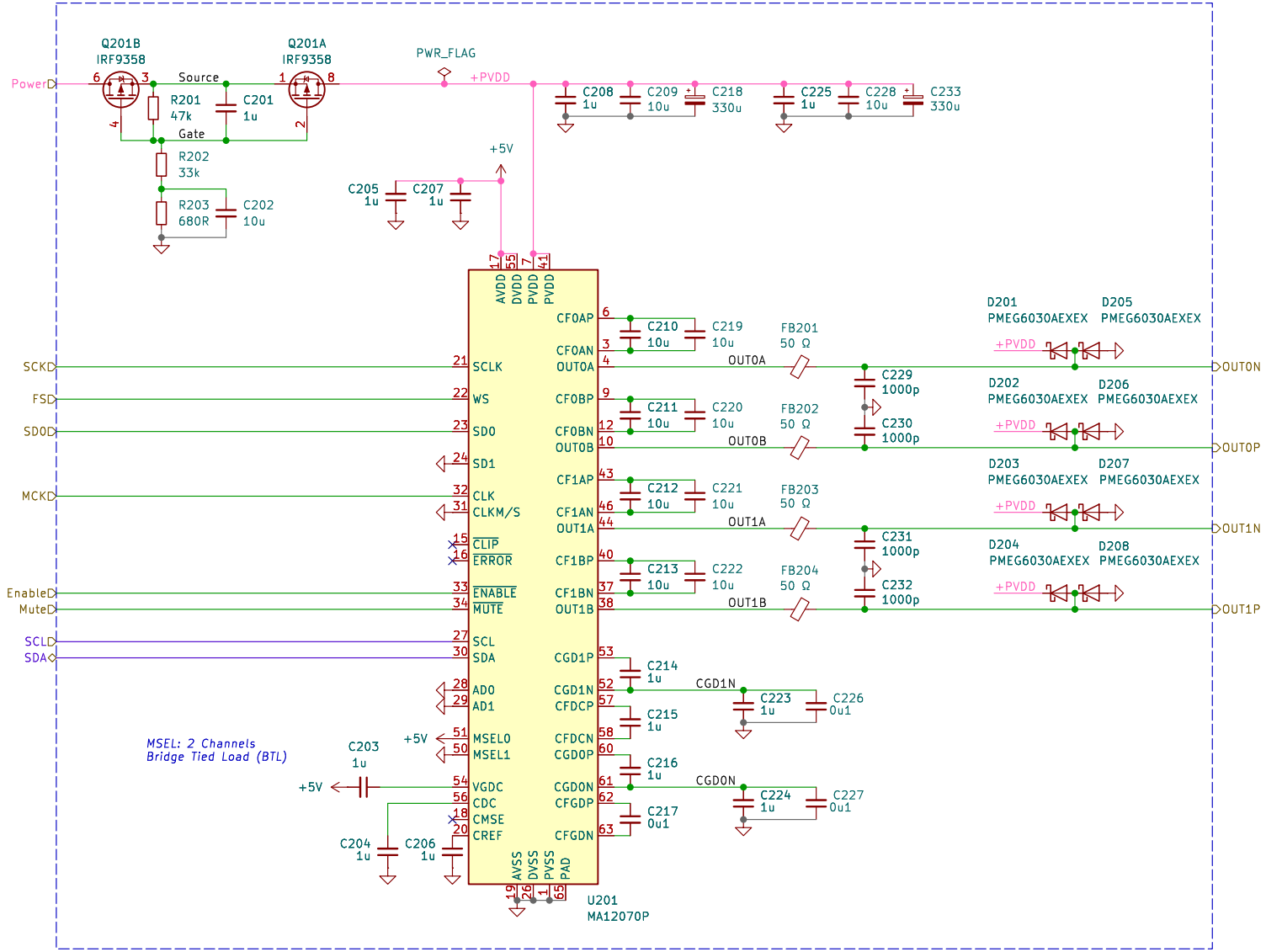

Errata: Power - External power supplies with some length of connecting wire are to be expected for this application. These wires effectively create a series of inductance with the amplifier board.

Combined with low-impedance decoupling of the supply line on the amplifier board, large peaks/ringing will occur when connecting the external power supply due to this L-C circuit.

The large DV/dt and magnitude of these peaks can trigger the ESD protecting circuitry in the MA12070 device, leading to fatal destruction of the silicon. Slowing down the transition on-time of the MOSFETs makes the PVDD rise slowly and eliminates this problem. This is done by an R-C time constant on the VGS of the MOSFETs.

Errata: Diodes - It is known that large output in-rush current cannot be handled well by the substrate of the IC. This might result in device breakdown. Large in-rush currents can occur when for example a double / simultaneous short is created at the output in combination with long(> 1 m) speaker cables.

Amplifier Audio
Versio Duo

Revision: 2026-02-11
Id: 2/5
Sheet: Amplifier Audio
Updated: 2026-02-11

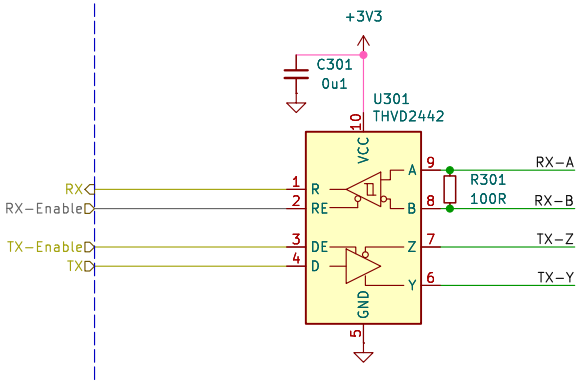

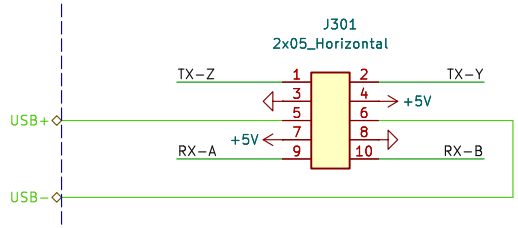

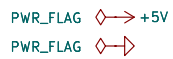

Power input from plug.

V2 Link
Plug

Revision: 2026-02-11
Id: 3/5
Sheet: Link Plug
Updated: 2026-02-11

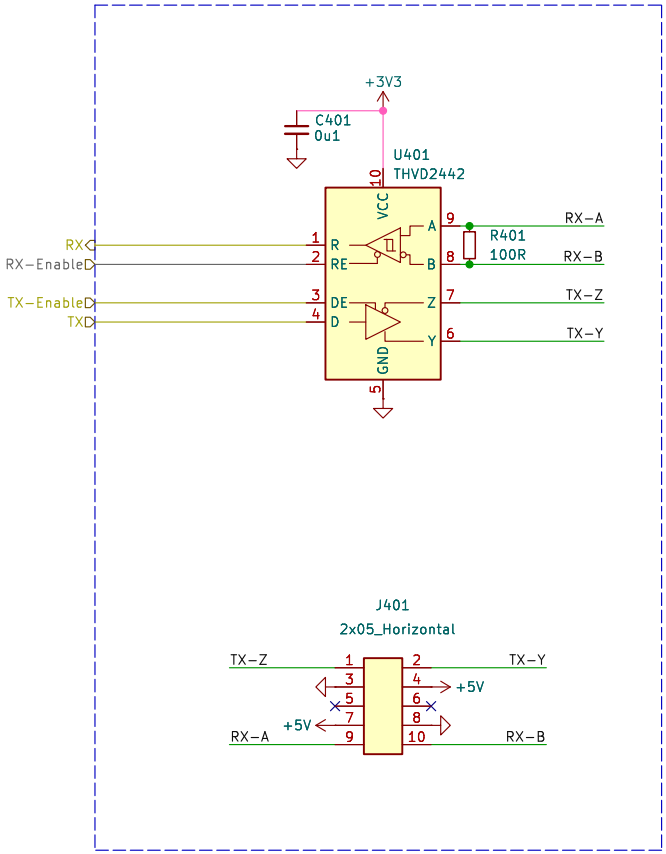

V2 Link
Socket

Revision: 2026-02-11
Id: 4/5
Sheet: Link Socket
Updated: 2026-02-11

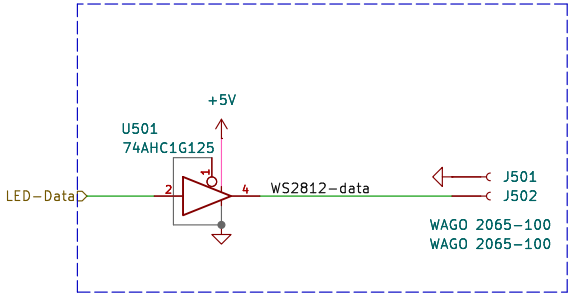

LED Strip
Versio Duo

Revision:
Id: 5/5
Sheet: LED Strip
Updated: 2023-01-12