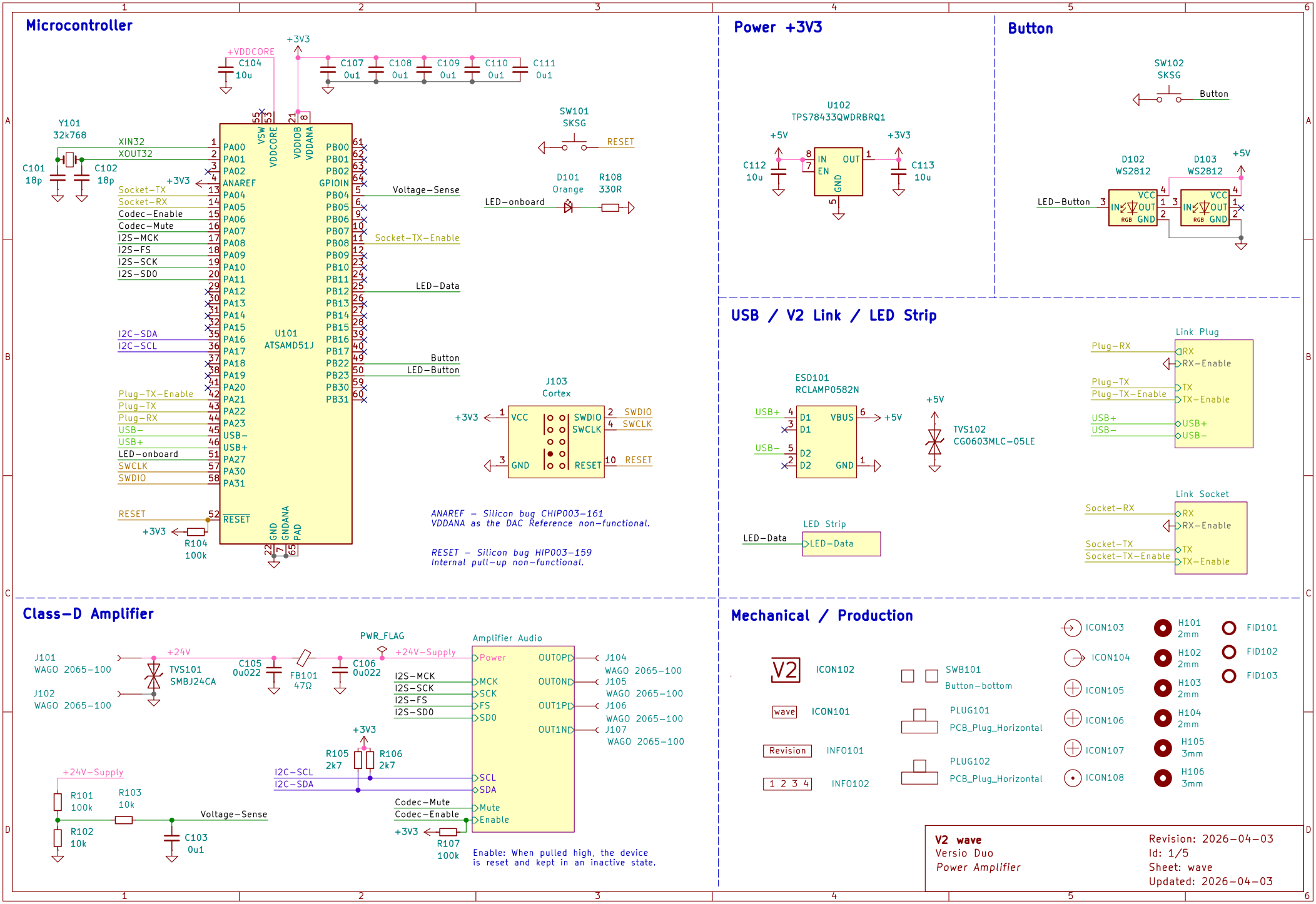
Microcontroller
+VDDCORE
C104 10u
+3V3
C107 0u1
C108 0u1
C109 0u1
C110 0u1
C111 0u1
Y101 32k768
C101 18p
C102 18p
XIN32
XOUT32
+3V3
Socket-TX
Socket-RX
Codec-Enable
Codec-Mute
I2S-MCK
I2S-FS
I2S-SCK
I2S-SD0
I2C-SDA
I2C-SCL
Plug-TX-Enable
Plug-TX
Plug-RX
USB-
USB+
LED-onboard
SWCLK
SWDIO
RESET
+3V3
R104 100k
U101 ATSAMD51J
VSW
VDDCORE
VDDIOB
VDDANA
PA00
PA01
PA02
ANAREF
PA04
PA05
PA06
PA07
PA08
PA09
PA10
PA11
PA12
PA13
PA14
PA15
PA16
PA17
PA18
PA19
PA20
PA21
PA22
PA23
USB-
USB+
PA27
PA30
PA31
RESET
GND
GNDANA
PAD
PB00
PB01
PB02
GPIOIN
PB04
PB05
PB06
PB07
PB08
PB09
PB10
PB11
PB12
PB13
PB14
PB15
PB16
PB17
PB22
PB23
PB30
PB31
SW101 SKSG
RESET
D101 Orange
R108 330R
LED-onboard
Voltage-Sense
Socket-TX-Enable
LED-Data
Button
LED-Button
J103 Cortex
+3V3
VCC
GND
SWDIO
SWCLK
RESET
ANAREF – Silicon bug CHIP003-161
VDDANA as the DAC Reference non-functional.
RESET – Silicon bug HIP003-159
Internal pull-up non-functional.
Power +3V3
U102 TPS78433QWDRBRQ1
+5V
C112 10u
IN
EN
OUT
GND
+3V3
C113 10u
Button
SW102 SKSG
Button
D102 WS2812
D103 WS2812
+5V
LED-Button
VCC
IN
OUT
RGB
GND
USB / V2 Link / LED Strip
ESD101 RCLAMP0582N
USB+
USB-
D1
D1
D2
D2
VBUS
GND
+5V
TVS102 CG0603MLC-05LE
Link Plug
Plug-RX
RX
RX-Enable
Plug-TX
Plug-TX-Enable
TX
TX-Enable
USB+
USB-
LED Strip
LED-Data
Link Socket
Socket-RX
RX
RX-Enable
Socket-TX
Socket-TX-Enable
TX
TX-Enable
Class-D Amplifier
J101 WAGO 2065-100
J102 WAGO 2065-100
+24V
TVS101 SMBJ24CA
C105 0u022
FB101 47Ω
C106 0u022
PWR_FLAG
+24V-Supply
Amplifier Audio
Power
MCK
SCK
FS
SD0
SCL
SDA
Mute
Enable
OUT0P
OUT0N
OUT1P
OUT1N
I2S-MCK
I2S-SCK
I2S-FS
I2S-SD0
J104 WAGO 2065-100
J105 WAGO 2065-100
J106 WAGO 2065-100
J107 WAGO 2065-100
+3V3
R105 2k7
R106 2k7
I2C-SCL
I2C-SDA
+24V-Supply
R101 100k
R102 10k
R103 10k
Voltage-Sense
C103 0u1
Codec-Mute
Codec-Enable
+3V3
R107 100k
Enable: When pulled high, the device is reset and kept in an inactive state.
Mechanical / Production
V2
ICON102
wave
ICON101
Revision
INFO101
1 2 3 4
INFO102
SWB101 Button-bottom
PLUG101 PCB_Plug_Horizontal
PLUG102 PCB_Plug_Horizontal
ICON103
ICON104
ICON105
ICON106
ICON107
ICON108
H101 2mm
H102 2mm
H103 2mm
H104 2mm
H105 3mm
H106 3mm
FID101
FID102
FID103
V2 wave
Versio Duo
Power Amplifier
Revision: 2026-04-03
Id: 1/5
Sheet: wave
Updated: 2026-04-03

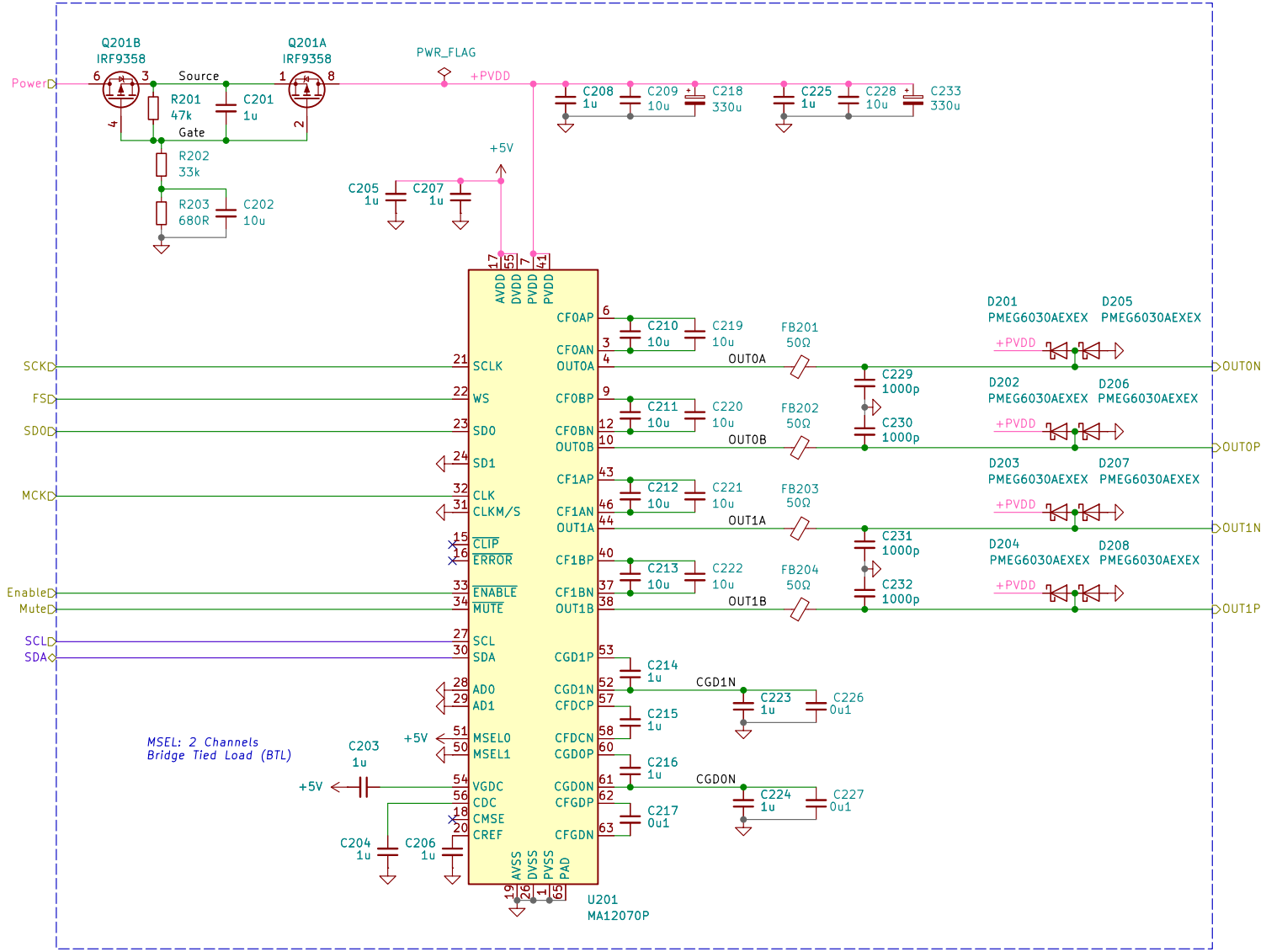

Errata: Power - External power supplies with some length of connecting wire are to be expected for this application. These wires effectively create a series of inductance with the amplifier board.

Combined with low-impedance decoupling of the supply line on the amplifier board, large peaks/ringing will occur when connecting the external power supply due to this L-C circuit.

The large DV/dt and magnitude of these peaks can trigger the ESD protecting circuitry in the MA12070 device, leading to fatal destruction of the silicon. Slowing down the transition on-time of the MOSFETs makes the PVDD rise slowly and eliminates this problem. This is done by an R-C time constant on the VGS of the MOSFETs.

Errata: Diodes - It is known that large output in-rush current cannot be handled well by the substrate of the IC. This might result in device breakdown. Large in-rush currents can occur when for example a double / simultaneous short is created at the output in combination with long(> 1 m) speaker cables.

V2 wave
Versio Duo

Revision: 2026-04-03
Id: 2/5
Sheet: Amplifier Audio
Updated: 2026-04-03

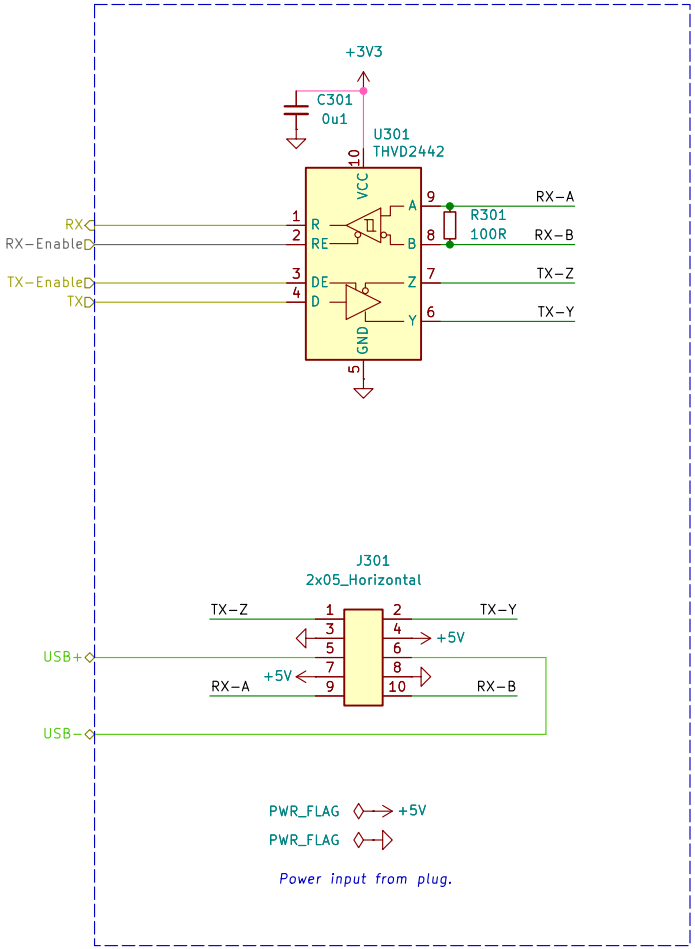

V2 wave
Plug

Revision: 2026-04-03
Id: 3/5
Sheet: Link Plug
Updated: 2026-04-03

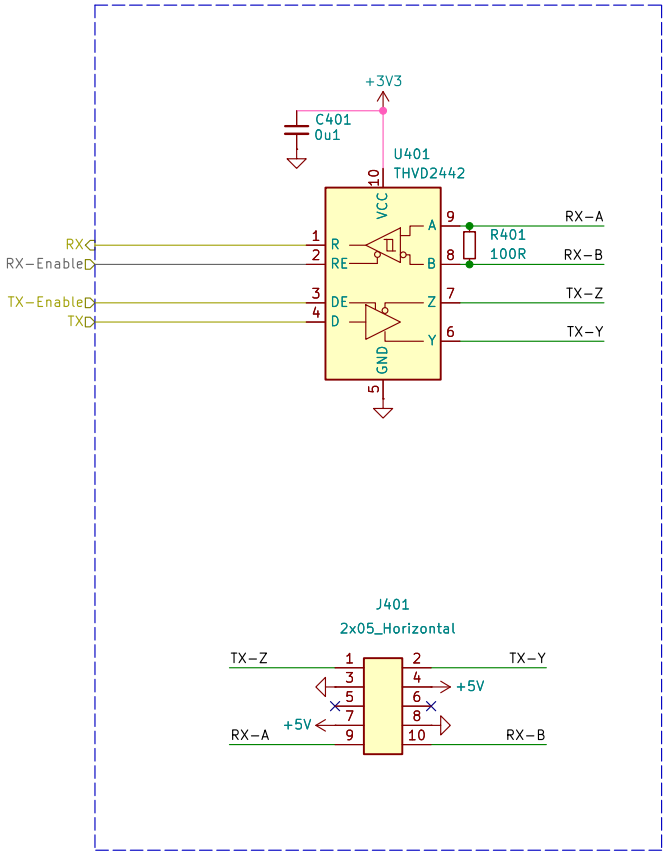

V2 wave
Socket

Revision: 2026-04-03
Id: 4/5
Sheet: Link Socket
Updated: 2026-04-03

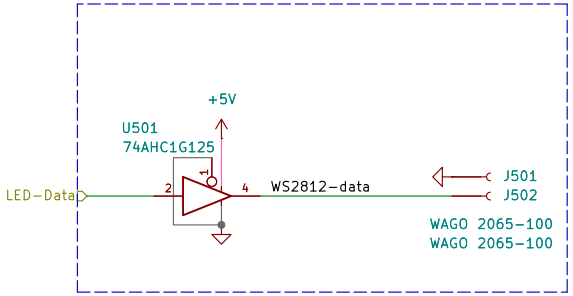

V2 wave
Versio Duo

Revision: 2026-04-03
Id: 5/5
Sheet: LED Strip
Updated: 2026-04-03