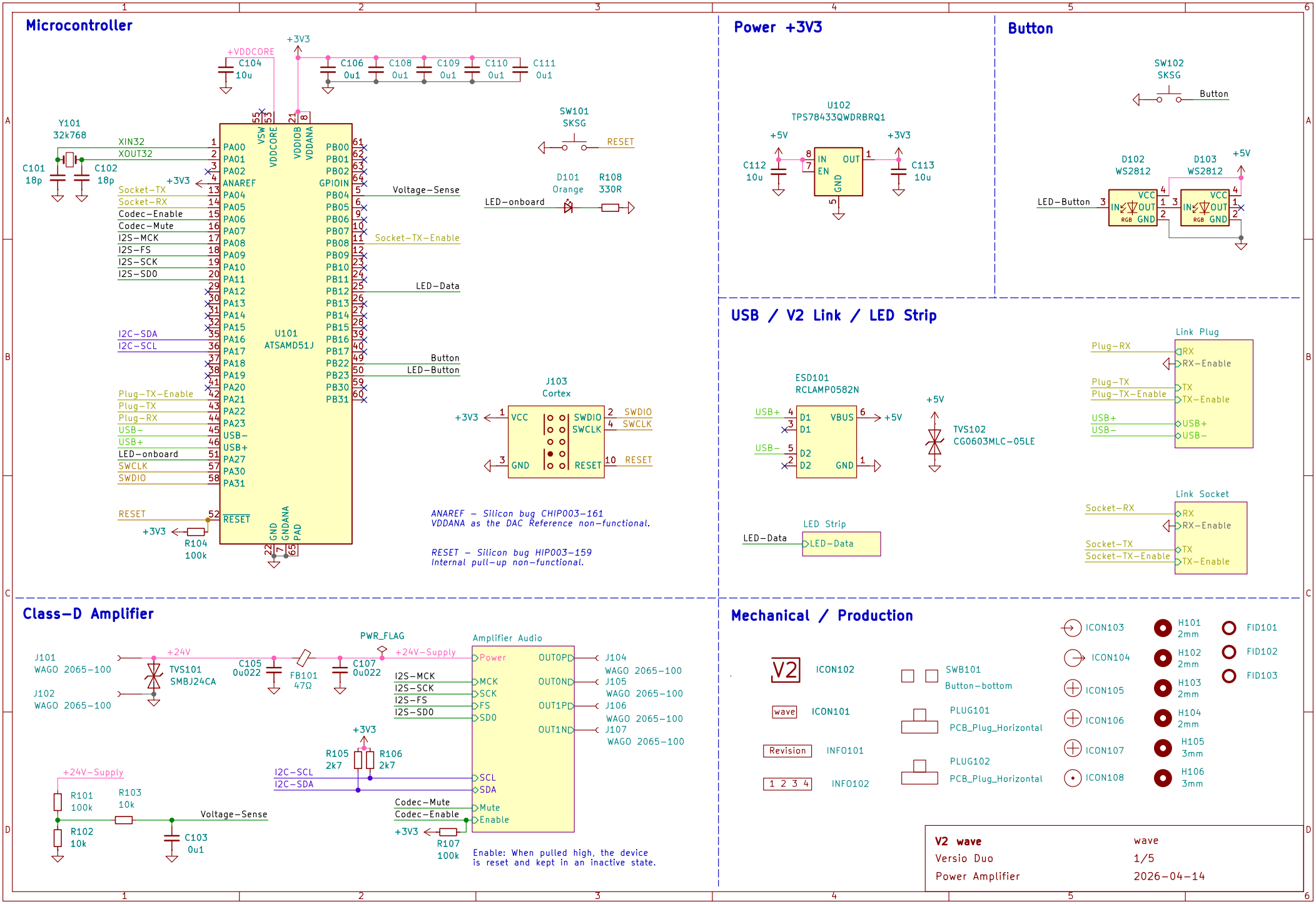
Microcontroller
+VDDCORE
C104 10u
+3V3
C106 0u1
C108 0u1
C109 0u1
C110 0u1
C111 0u1
Y101 32k768
C101 18p
C102 18p
XIN32
XOUT32
Socket-TX
Socket-RX
Codec-Enable
Codec-Mute
I2S-MCK
I2S-FS
I2S-SCK
I2S-SD0
I2C-SDA
I2C-SCL
Plug-TX-Enable
Plug-TX
Plug-RX
USB-
USB+
LED-onboard
SWCLK
SWDIO
RESET
R104 100k
U101 ATSAMD51J
VSW
VDDCORE
VDDIOB
VDDANA
ANAREF
GPIOIN
GND
GNDANA
PAD
Voltage-Sense
Socket-TX-Enable
LED-Data
Button
LED-Button
SW101 SKSG
D101 Orange
R108 330R
J103 Cortex
VCC
GND
SWDIO
SWCLK
RESET
ANAREF – Silicon bug CHIP003-161
VDDANA as the DAC Reference non-functional.
RESET – Silicon bug HIP003-159
Internal pull-up non-functional.
Power +3V3
U102 TPS78433QWDRBRQ1
+5V
C112 10u
IN
EN
OUT
GND
C113 10u
Button
SW102 SKSG
D102 WS2812
D103 WS2812
LED-Button
USB / V2 Link / LED Strip
ESD101 RCLAMP0582N
USB+
USB-
D1
D2
VBUS
TVS102 CG0603MLC-05LE
Link Plug
Plug-RX
Plug-TX
Plug-TX-Enable
RX
RX-Enable
TX
TX-Enable
LED Strip
LED-Data
Link Socket
Socket-RX
Socket-TX
Socket-TX-Enable
Class-D Amplifier
J101 WAGO 2065-100
J102 WAGO 2065-100
+24V
TVS101 SMBJ24CA
C105 0u022
FB101 47Ω
C107 0u022
PWR_FLAG
+24V-Supply
Amplifier Audio
Power
MCK
SCK
FS
SD0
SCL
SDA
Mute
Enable
OUT0P
OUT0N
OUT1P
OUT1N
J104 WAGO 2065-100
J105 WAGO 2065-100
J106 WAGO 2065-100
J107 WAGO 2065-100
R105 2k7
R106 2k7
R101 100k
R102 10k
R103 10k
C103 0u1
R107 100k
Enable: When pulled high, the device is reset and kept in an inactive state.
Mechanical / Production
ICON102
ICON101
INFO101
INFO102
SWB101 Button-bottom
PLUG101 PCB_Plug_Horizontal
PLUG102 PCB_Plug_Horizontal
ICON103
ICON104
ICON105
ICON106
ICON107
ICON108
H101 2mm
H102 2mm
H103 2mm
H104 2mm
H105 3mm
H106 3mm
FID101
FID102
FID103
V2 wave
Versio Duo
Power Amplifier
wave
1/5
2026-04-14

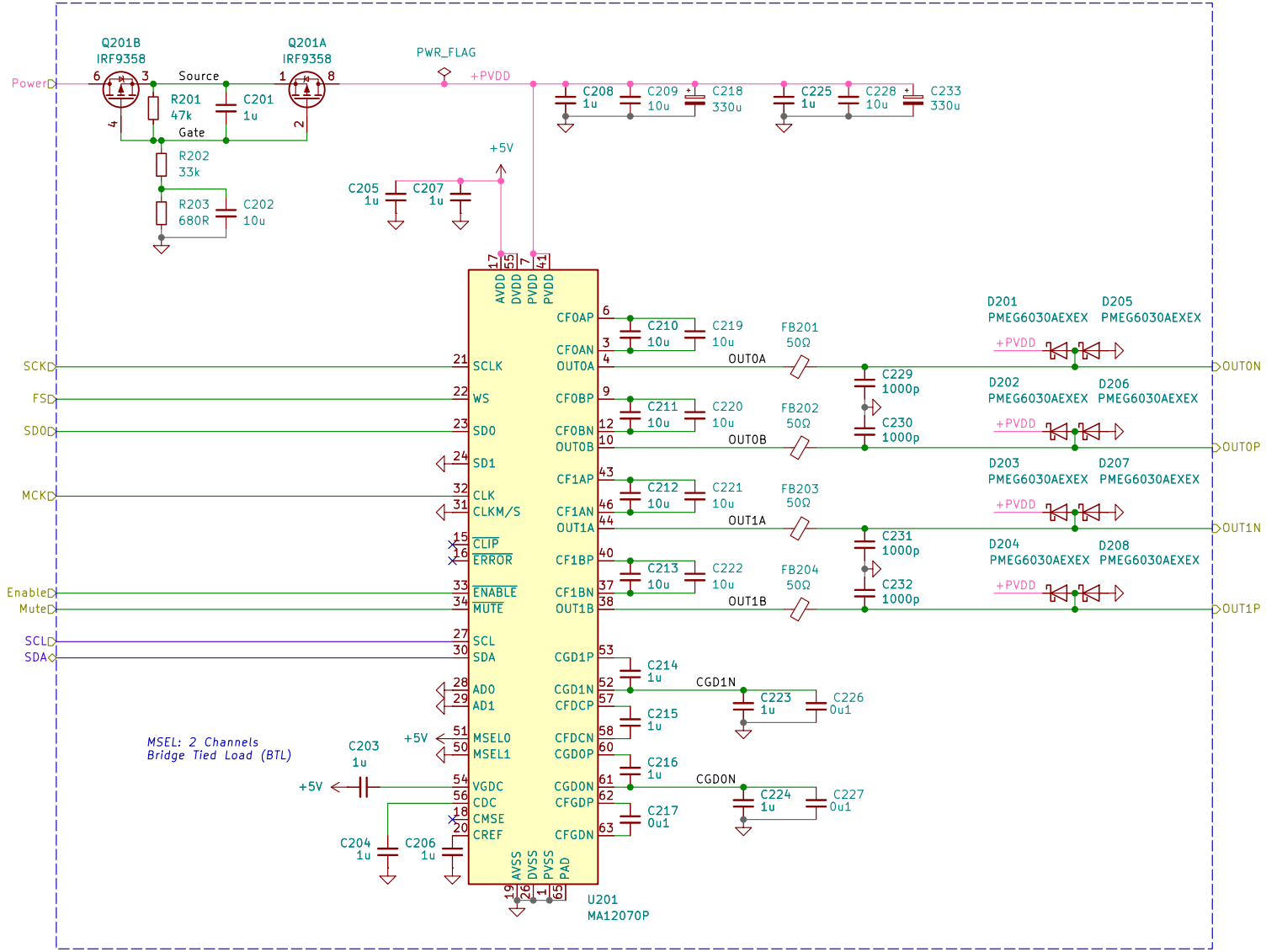

Errata: Power - External power supplies with some length of connecting wire are to be expected for this application. These wires effectively create a series of inductance with the amplifier board.

Combined with low-impedance decoupling of the supply line on the amplifier board, large peaks/ringing will occur when connecting the external power supply due to this L-C circuit.

The large DV/dt and magnitude of these peaks can trigger the ESD protecting circuitry in the MA12070 device, leading to fatal destruction of the silicon. Slowing down the transition on-time of the MOSFETs makes the PVDD rise slowly and eliminates this problem. This is done by an R-C time constant on the VGS of the MOSFETs.

Errata: Diodes - It is known that large output in-rush current cannot be handled well by the substrate of the IC. This might result in device breakdown. Large in-rush currents can occur when for example a double / simultaneous short is created at the output in combination with long(> 1 m) speaker cables.

V2 wave	Amplifier Audio
Versio Duo	2/5
Power Amplifier	2026-04-14

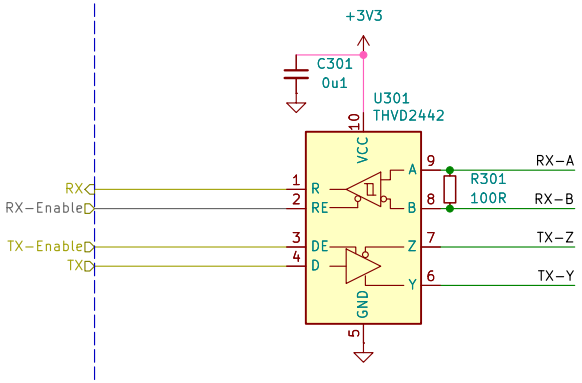

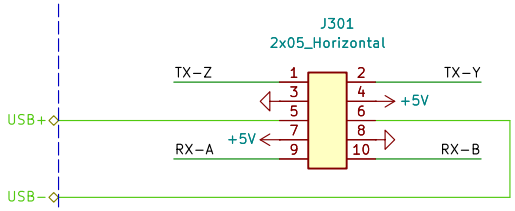

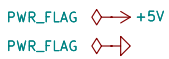

Power input from plug.

V2 wave	Link Plug
Versio Duo	3/5
Power Amplifier	2026-04-14

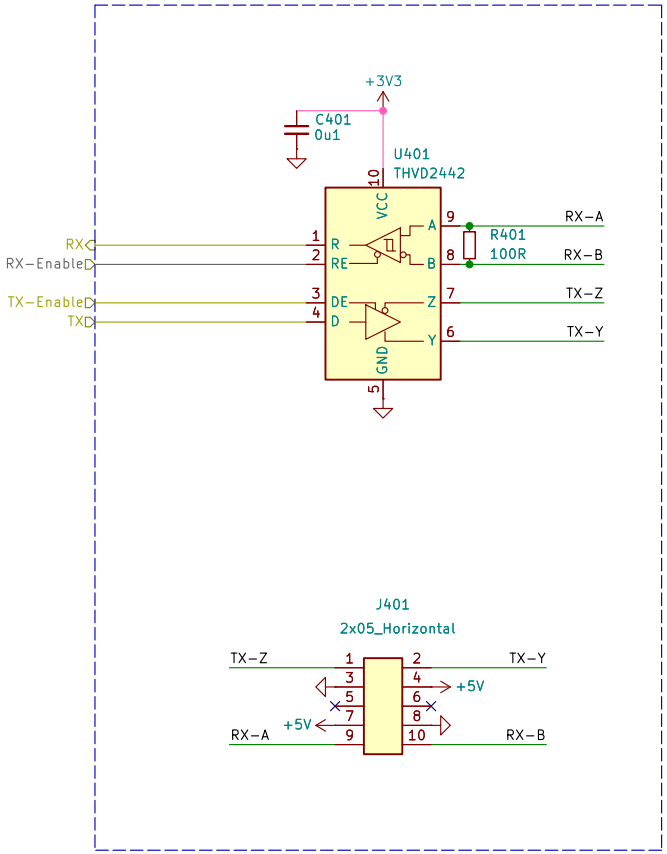

V2 wave	Link Socket
Versio Duo	4/5
Power Amplifier	2026-04-14

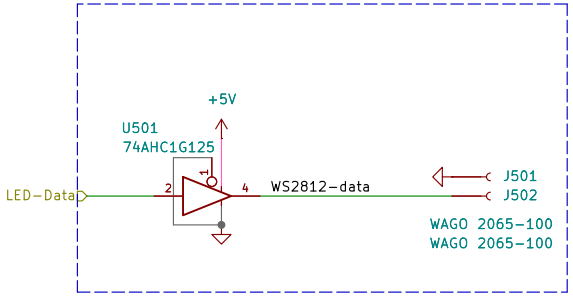

V2 wave	LED Strip
Versio Duo	5/5
Power Amplifier	2026-04-14