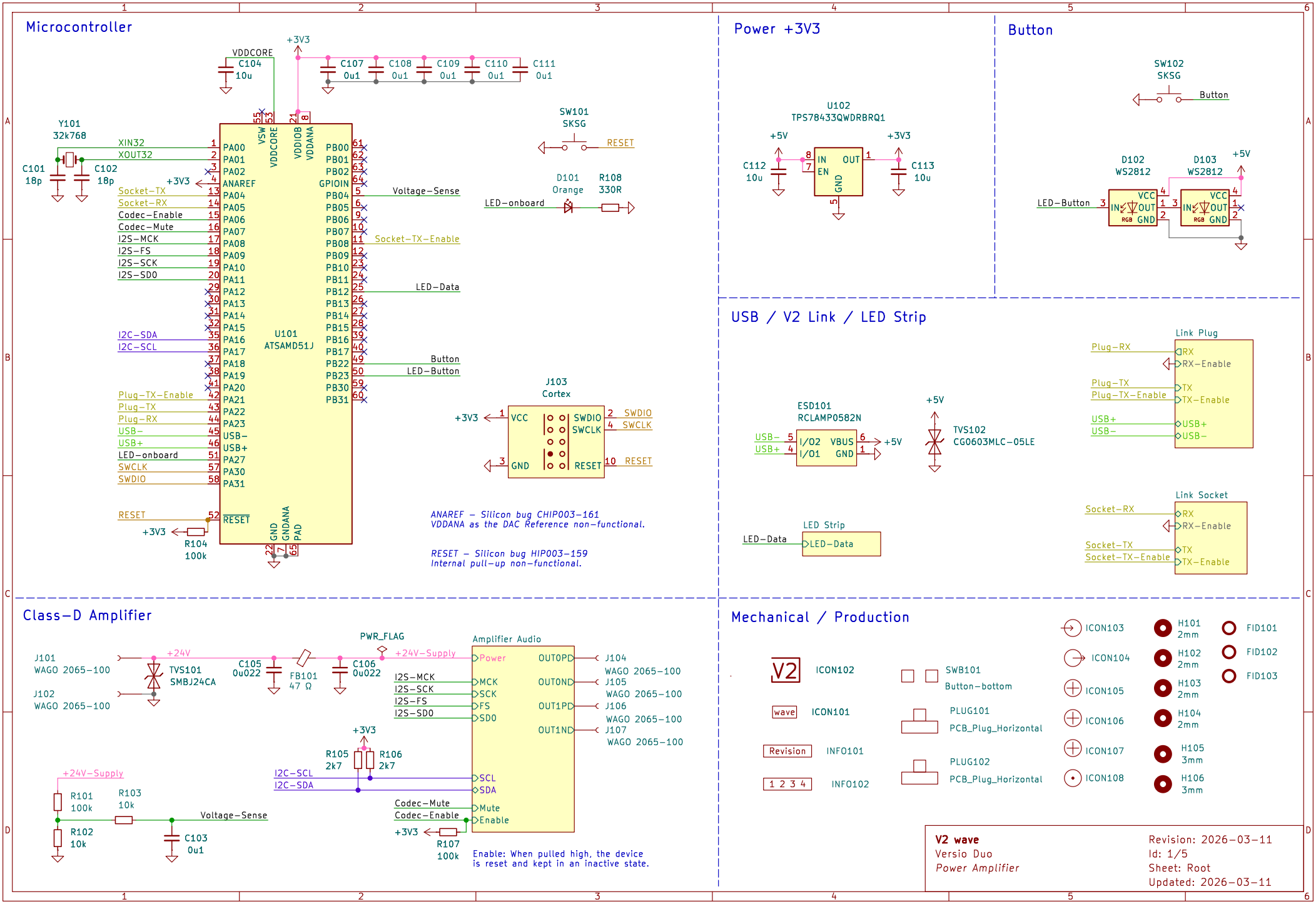
Microcontroller
VDDCORE
C104
10u
+3V3
C107 0u1
C108 0u1
C109 0u1
C110 0u1
C111 0u1
Y101
32k768
C101
18p
C102
18p
XIN32
XOUT32
Socket-TX
Socket-RX
Codec-Enable
Codec-Mute
I2S-MCK
I2S-FS
I2S-SCK
I2S-SD0
I2C-SDA
I2C-SCL
Plug-TX-Enable
Plug-TX
Plug-RX
USB-
USB+
LED-onboard
SWCLK
SWDIO
RESET
R104
100k
U101
ATSAMD51J
PA00
PA01
PA02
ANAREF
PA04
PA05
PA06
PA07
PA08
PA09
PA10
PA11
PA12
PA13
PA14
PA15
PA16
PA17
PA18
PA19
PA20
PA21
PA22
PA23
USB-
USB+
PA27
PA30
PA31
RESET
VSW
VDDCORE
VDDIOB
VDDANA
GND
GNDANA
PAD
PB00
PB01
PB02
GPIOIN
PB04
PB05
PB06
PB07
PB08
PB09
PB10
PB11
PB12
PB13
PB14
PB15
PB16
PB17
PB22
PB23
PB30
PB31
Voltage-Sense
Socket-TX-Enable
LED-Data
Button
LED-Button
SW101
SKSG
RESET
D101
Orange
R108
330R
LED-onboard
J103
Cortex
VCC
GND
SWDIO
SWCLK
RESET
ANAREF – Silicon bug CHIP003-161
VDDANA as the DAC Reference non-functional.
RESET – Silicon bug HIP003-159
Internal pull-up non-functional.
Power +3V3
U102
TPS78433QWDRBRQ1
+5V
+3V3
C112
10u
C113
10u
IN
OUT
EN
GND
Button
SW102
SKSG
Button
D102
WS2812
D103
WS2812
LED-Button
VCC
IN
OUT
GND
RGB
USB / V2 Link / LED Strip
ESD101
RCLAMP0582N
USB-
USB+
I/O2
I/O1
VBUS
GND
+5V
TVS102
CG0603MLC-05LE
Link Plug
Plug-RX
RX
RX-Enable
Plug-TX
Plug-TX-Enable
TX
TX-Enable
USB+
USB-
LED Strip
LED-Data
Link Socket
Socket-RX
Socket-TX
Socket-TX-Enable
Class-D Amplifier
J101
WAGO 2065-100
J102
WAGO 2065-100
+24V
TVS101
SMBJ24CA
C105
0u022
FB101
47 Ω
C106
0u022
PWR_FLAG
+24V-Supply
Amplifier Audio
Power
MCK
SCK
FS
SD0
SCL
SDA
Mute
Enable
OUT0P
OUT0N
OUT1P
OUT1N
J104
WAGO 2065-100
J105
WAGO 2065-100
J106
WAGO 2065-100
J107
WAGO 2065-100
I2S-MCK
I2S-SCK
I2S-FS
I2S-SD0
R105
2k7
R106
2k7
I2C-SCL
I2C-SDA
Codec-Mute
Codec-Enable
R101
100k
R102
10k
R103
10k
Voltage-Sense
C103
0u1
R107
100k
Enable: When pulled high, the device
is reset and kept in an inactive state.
Mechanical / Production
ICON102
ICON101
INFO101
INFO102
SWB101
Button-bottom
PLUG101
PCB_Plug_Horizontal
PLUG102
PCB_Plug_Horizontal
ICON103
ICON104
ICON105
ICON106
ICON107
ICON108
H101
2mm
H102
2mm
H103
2mm
H104
2mm
H105
3mm
H106
3mm
FID101
FID102
FID103
V2 wave
Versio Duo
Power Amplifier
Revision: 2026-03-11
Id: 1/5
Sheet: Root
Updated: 2026-03-11

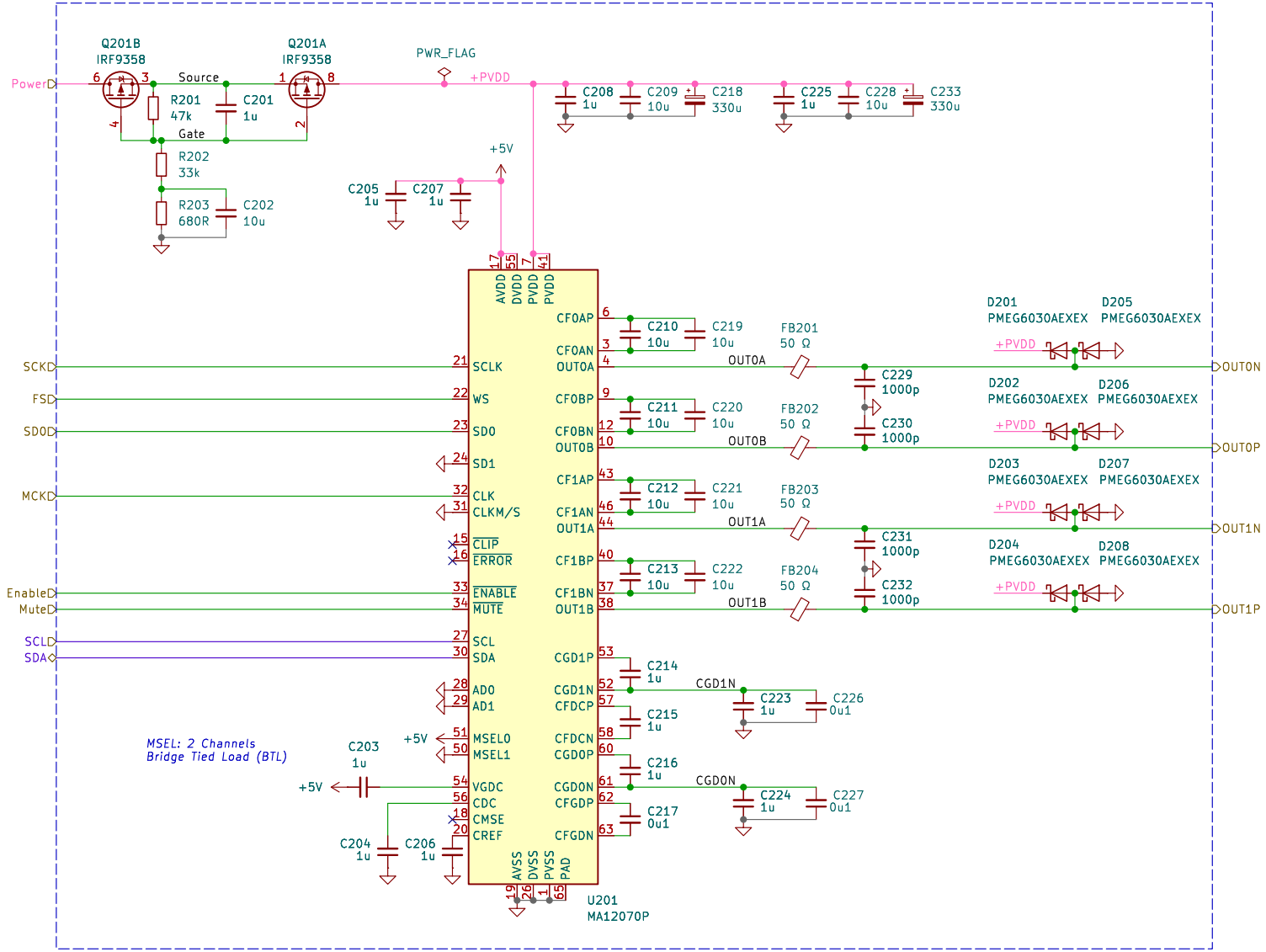

Errata: Power - External power supplies with some length of connecting wire are to be expected for this application. These wires effectively create a series of inductance with the amplifier board.

Combined with low-impedance decoupling of the supply line on the amplifier board, large peaks/ringing will occur when connecting the external power supply due to this L-C circuit.

The large DV/dt and magnitude of these peaks can trigger the ESD protecting circuitry in the MA12070 device, leading to fatal destruction of the silicon. Slowing down the transition on-time of the MOSFETs makes the PVDD rise slowly and eliminates this problem. This is done by an R-C time constant on the VGS of the MOSFETs.

Errata: Diodes - It is known that large output in-rush current cannot be handled well by the substrate of the IC. This might result in device breakdown. Large in-rush currents can occur when for example a double / simultaneous short is created at the output in combination with long(> 1 m) speaker cables.

Amplifier Audio
Versio Duo

Revision: 2026-02-11
Id: 2/5
Sheet: Amplifier Audio
Updated: 2026-02-11

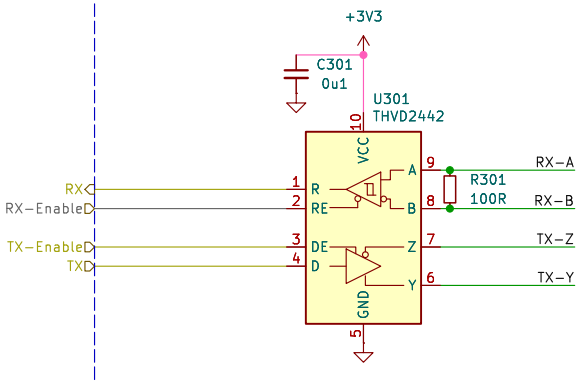

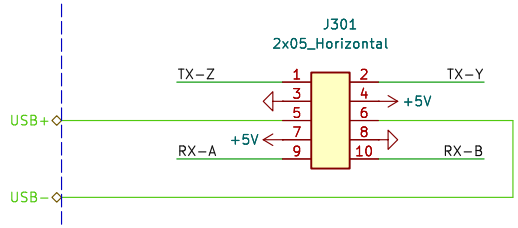

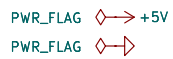

Power input from plug.

V2 Link
Plug

Revision: 2026-02-11
Id: 3/5
Sheet: Link Plug
Updated: 2026-02-11

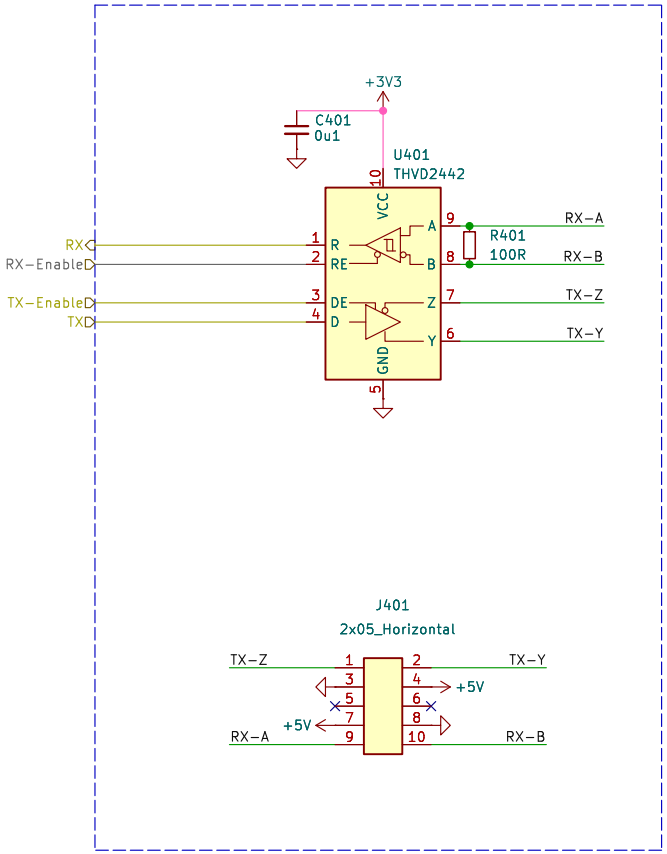

V2 Link
Socket

Revision: 2026-02-11
Id: 4/5
Sheet: Link Socket
Updated: 2026-02-11

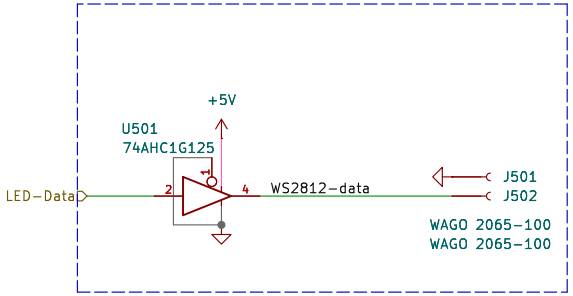

LED Strip
Versio Duo

Revision:
Id: 5/5
Sheet: LED Strip
Updated: 2023-01-12