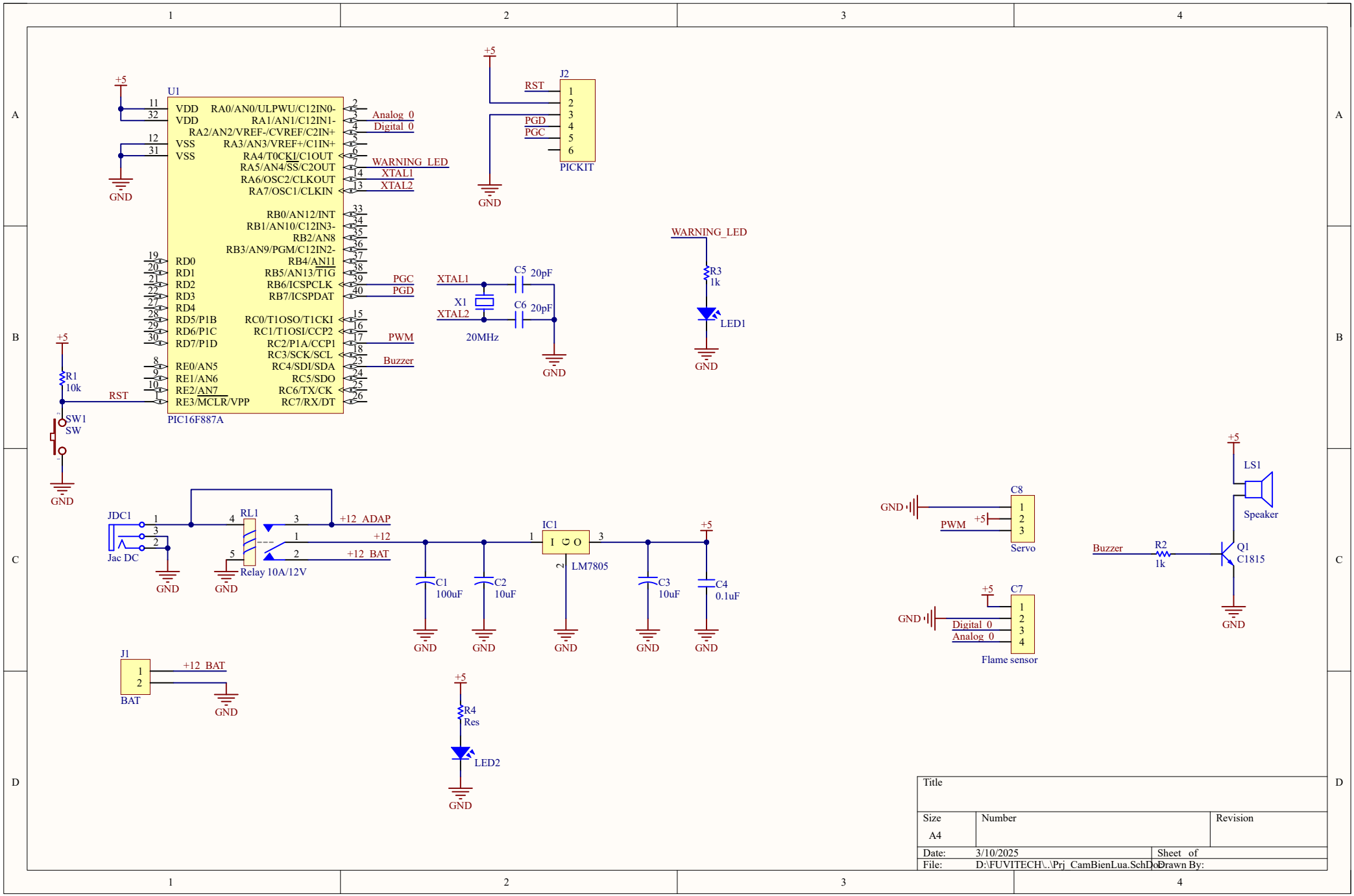
U1
PIC16F887A
VDD
VDD
VSS
VSS
RA0/AN0/ULPWU/C12IN0-
RA1/AN1/C12IN1-
RA2/AN2/VREF-/CVREF/C2IN+
RA3/AN3/VREF+/C1IN+
RA4/T0CKI/C1OUT
RA5/AN4/SS/C2OUT
RA6/OSC2/CLKOUT
RA7/OSC1/CLKIN
RB0/AN12/INT
RB1/AN10/C12IN3-
RB2/AN8
RB3/AN9/PGM/C12IN2-
RB4/AN11
RB5/AN13/T1G
RB6/ICSPCLK
RB7/ICSPDAT
RD0
RD1
RD2
RD3
RD4
RD5/P1B
RD6/P1C
RD7/P1D
RC0/T1OSO/T1CKI
RC1/T1OSI/CCP2
RC2/P1A/CCP1
RC3/SCK/SCL
RC4/SDI/SDA
RC5/SDO
RC6/TX/CK
RC7/RX/DT
RE0/AN5
RE1/AN6
RE2/AN7
RE3/MCLR/VPP
Analog_0
Digital_0
WARNING_LED
XTAL1
XTAL2
PGC
PGD
PWM
Buzzer
RST
J2
PICKIT
RST
PGD
PGC
C5 20pF
C6 20pF
X1
20MHz
R3
1k
LED1
R1
10k
SW1
SW
JDC1
Jac DC
RL1
Relay 10A/12V
+12_ADAP
+12
+12_BAT
IC1
LM7805
C1
100uF
C2
10uF
C3
10uF
C4
0.1uF
J1
BAT
R4
Res
LED2
C8
Servo
C7
Flame sensor
LS1
Speaker
R2
1k
Q1
C1815
+5
GND
Title
Size
A4
Number
Revision
Date: 3/10/2025
Sheet of
File: D:\FUVITECH\..\Prj_CamBienLua.SchDoc
Drawn By: