A Research for Segmentation of Brain Tumors Based on GAN Model

Linh Khanh Phung[1,2], Sinh Van Nguyen[1,2], Tan Duy Le[1,2], Marcin Maleszka[3]

[1] School of Computer Science and Engineering
International University, Ho Chi Minh City, Vietnam
[2] Vietnam National University, Ho Chi Minh City, Vietnam
[3] Department of Applied Informatics
Wroclaw University of Science and Technology, Poland
Corresponding author: nvsinh@hcmiu.edu.vn ✉

Abstract. Analysis of medical image is a useful method that can support doctors in medical diagnosis. The development of deep learning models is essential and widely applied in image processing and computer vision. Application of machine learning and artificial intelligent in brain tumor diagnosis brings an accuracy and efficiency in medical treatment field. In this research paper, we present a method for determining and segmenting the brain tumor region in the medical image dataset based on 3D Generative Adversarial Network (3D-GAN) model. We first explore the state-of-the-art methods and recent approaches in such field. Our proposed 3D-GAN model consist of three steps: (i) pre-processing data, (ii) building an architecture of multi-scaled GAN model, and (iii) modifying loss function. The last our contribution is creating an application to visualize 3D models that representation of medical resonance brain images with the incorporation of the chosen models to determine exactly the region containing brain tumors. Comparing to the existing methods, our proposed model obtained better performance and accuracy.

Keywords: Segmentation · Medical Image processing · Generative adversarial network · Brain tumor.

1 Introduction

The methods for clinical diagnosis and treatment based on medical image processing are more and more very efficient. Especially, in the context of rapid development of information technology (IT) recent years, the new techniques in image analysis and video files processing from the dataset like MRI, CT scanner, Endoscopic surgery, Ultrasonography, etc., are proved obtaining advantages in both diagnosis and treatment. It helps deceasing the time of treatment and risk; increasing health recuperation after operating and saving treatment fee. Brain tumor is a very dangerous disease for anyone. Determining exactly the tumor region on the brain is an important step to propose a suitable method for processing and treatment. The techniques in image processing can be applied to analyze, recognize and classify the tumor regions. Deep learning approaches have been used to analyze the medical image dataset in the-state-of-the-art methods.

However, the accuracy and time processing are factors that need to improve. Depending on quality of the obtained images from magnetic resonance imaging (MRI) scanning techniques, doctors can recognize exactly the tumor region on the brain image based on its boundary. In case of low resolution, lack of information of color, or the characteristics of tumors are not determined clearly, the digital image processing algorithms can be used to process. However, with a huge amount of image data obtained by scanning the MRI that may prevent manual segmentation in a reasonable time. Although convolution neural network (CNN) models are themselves can be achieved satisfactory results, they still have restrictions in understanding semantic information and spatial contiguity in segmentation of the images. In deep learning approaches, GAN is widely used in classification of images. It provide ability to convince people that its own synthetic image is real by using a minimax mechanism [1]. Methods such as GAN can also provide constraints and refinements of the segmentation model's outputs [2,3]. In medical imaging segmentation, a majority of GAN-based segmentation model is implemented using 2 components: generator and discriminator. While the generator cater for segmentation, the discriminator, usually put efforts to differentiate the difference between the given ground truth and the predicted mask. As the result, the generator is theoretically successful if the discriminator is no longer able to distinguish the real and predict segmentation mask. Therefore, an automatic solution is required for faster and more effective segmentation of the brain tumors. This research paper presents a proposed method for segmentation of Brain Tumors based on GAN Model. Our proposed method is trained and validated in the BRATS 2021 dataset [4], so the first step is pre-processing data. In the next step, we build an architecture of multi-scaled GAN model (for training and testing processed data). After that, we modify the loss function to obtain the accuracy of the proposed method. The last our work is creating an application to visualize 3D models. Comparing to the several methods, our proposed method obtained better performance and accuracy.
The remainder of the paper is structured as follows. Section 2 presents several researches. Section 3 describes in detail our proposed method for segmentation and simulations. We present the implementation and obtained results in section 4. Section 5 includes discussion and evaluation. The last section is our conclusion and future work.

2 Related works

In this section, we review the state-of-the-art methods and applications for medical image processing. The method is based on the graphical techniques and geometric modeling for processing the 3D objects have been proposed in [5]. In this research, authors presented the proposed methods for processing 3D objects from variety of dataset. The methods for medical image processing are proposed to reconstruct the data objects from a DICOM dataset [6,7]. This method can help doctors and medical staffs have a better diagnosis in their treatments. The advent of CNN has contributed to the high quality outcome of automatic medical image segmentation. Among the most successful models, U-Net architecture

has been widely used to perform partition of tumors and cells [8]. The structure is formed in U-shape by the presence of 2 paths: contracting path (called encoding path) for obtaining feature information and expansive path (called decoding path) for spatial information reconstruction. Due to the extensive usage of 3D medical images, early updates of the original 2D U-Net to the 3D version were proposed in studies like V-Net with the contribution of Dice loss [11], and 3D U-Net, which substitutes all U-Net's 2D operations with their 3D counterparts [12]. U-Net can localize the interest region in an image to produce a more accurate segmentation while requiring a small number of training images [8,9]. Other variations have been rigorously studied to either compromise the U-Net's deepness [13,14] or to conquer the model's constraints on the diversion of shapes and sizes of the target structure [9,15]. However, studies have shown that U-Net-based models still meet limitations in variations of object scales in medical images [9] and demanding inept weight ensemble [10]. Therefore, improving the current state of the 3D neuro-imaging network is crucial and can be put into practice under the refinements of some frameworks such as GAN. In 2012, a group of scientists established a challenge named Brain Tumor Segmentation (BraTS). The number of organizers, participants, and data has increased. The recent BraTS2021 dataset has increased significantly from 660 to 2000 cases since 2020[4]. The first-place winner of the 2020 BraTS challenge was Isensee et al. [19], who introduced the framework nnU-Net (no-new U-Net)that allows adaptation to general biomedical segmentation tasks. nnU-Net uses a batch size of 2, volume shape of 4x128x128x128, and intensive modifications including region-based training, post-processing, data augmentation, and batch normalization. Thereafter, both winners of the BraTS 2021 challenge, Futrega et. al. [20] with first-place in the validation set and Luu et. al. [21] winning first-place in the final testing set. They are utilized the nnU-Net structure as baseline model. While the authors from NVIDIA [20] proposed an extensive ablation study to choose the most prominent architecture. The authors from KAIST [21] introduced a more comprehensive network with an axial attention decoder alongside other minor modifications. Nevertheless, most models without GAN suffer from the need for intensive ablation study to search for the most notable model possible [20]. Such approaches are tedious and expensive since the models need retraining for any modification. Furthermore, they usually need asymmetric architecture [17] or two similar models for refinements[18], which could require intensive training resources. The utilization of GAN can help resolve this cost with fewer efforts. An early implementation of GAN for medical image segmentation was proposed by Xue et. al. [22]. SegAN used basic 2D U-Net architecture as the generator, which receives axial slices of the original 3D volume as inputs. After the segmentation, the 2D masks are then restacked to the volumetric images. The discriminator reused the generator's encoder as architecture, and a pair of the predicted map and ground truth multiplied with the brain images as input. The entire network aims to optimize the defined multi-scale object L_1 loss function. Finally, as an inspiration of Pix2Pix, Vox2Vox follows the GAN architecture in which the generator is a typical 3D U-Net and a simple CNN architecture as the discriminator

[23]. For the generator, the model accepts the cropped 3D image rather than 2D slices as in SeGAN as input and uses the batch size of 4. The segmentation result and the ground truth are also used as input for the discriminator for realness recognition. While Vox2Vox also encloses the brain image into the discriminator's input, it applies concatenation instead of multiplication.

3 Our proposed method

3.1 Overview

The main idea of our proposed method is presented as follows (see Fig.1). We use a GAN model with improved steps in architecture design and loss function. The method diagram includes four modules: Input data; Generator architecture; Bridge (an intermediate processing step between generator and discriminator) and Discriminator.

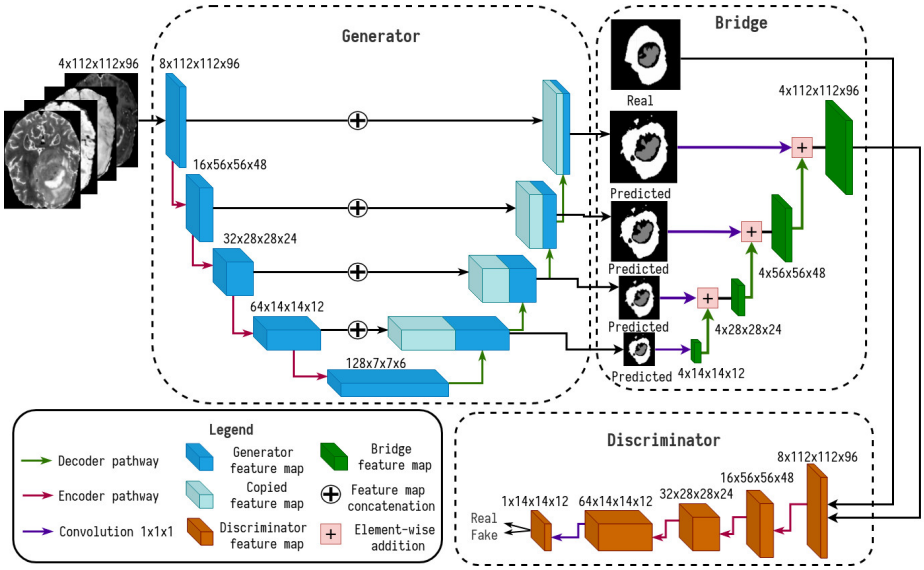

Fig. 1. The architecture diagram of our proposed method

3.2 Data structure and preprocessing

The input data is first processed before input to the generator. Bridge is the improved point in architecture design of our model. Both real images and predicted images are put into the Discriminator for determining the real and fake ones. Modifying the loss function is additional important step to compute and segment the tumor of brain. In this research, the input data is downloaded from an open source [24], the Benchmark on Brain Tumor Segmentation (BraTS).

They are formatted following the file structure of medical image dataset NifTi [24]. They are structured and concatenated into a volume that is saved as a single file (see Fig.2)

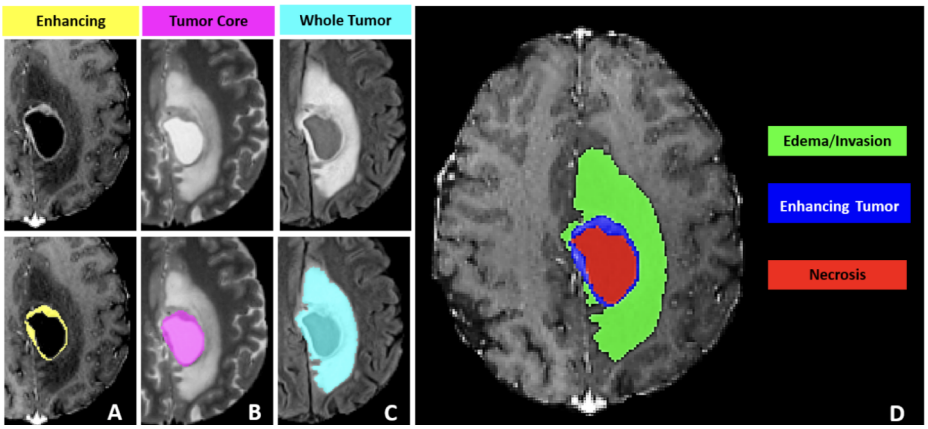

Fig. 2. The structure of NifTi image [4]

The same as Dicom images created from MRI CT scanner [6], the NIfTI files are commonly used in neuroscience and even neuroradiology research. The NifTi files can be converted easily into Dicom files based on some existing tools. They are described as follows.

- Data structure: one case (a set of patient images) consist of 5 NifTi files (4 modes and 1 label). Each NifTi file is a 3D image. Each 3D image has size 240x240x155 structured in a 3D volume. For annotations, the predicted mask is labeled as 0, 1, 2 and 4, where: 0 is background; 1 is Necrosis; 2 is Invasion and 4 is Enhancing tumor (ET). The regions are: Enhancing tumor is the regions with label 4; Tumor core (TC) is the regions with label 1 and 4; Whole tumor (WT) is the regions with label 1, 2, and 4.
- Pre-processing data: for each case, combine all modes into a 3D array to process. For each 3D object, the brain region is cropped based on its boundary and background subtraction. The object data is then normalized for faster training. Data augmentation is processed to finish training step

3.3 Building architecture

As mentioned, our architecture of Multi-scale GAN consists of three parts: generator, discriminator, and "bridge". The generator employs two symmetric pathways: an encoding pathway that extracts the spatial information from the the set of 4 modalities of brain MRI images; and a decoding one that enables precise localization of tumor regions from the encoded feature map. The detail of the

block is described as follows. The entire encoding pathway of the generator contains 4 blocks at the corresponding level, in which the feature map in the lower level is doubled in channels while decreased in widths and heights. The pattern of the 3D Instance Normalization, Leaky Rectified Linear Unit (LeakyReLU), and 3D Convolution are adopted throughout each block. It is also crucial to note that the deeper the model goes, the higher the chance deterioration occurs during the model's learning process [25]. Hence, to remedy such problem, we use a structure that bears some resemblance to that of Deep ResUnet [13]. Such similarity lies in the usage of skip connection to avoid vanishing gradient from the first 3D convolution layer of the block to its third one (see Fig.1). Moreover, a dropout layer is used in the middle of the block to improve generalization [8].

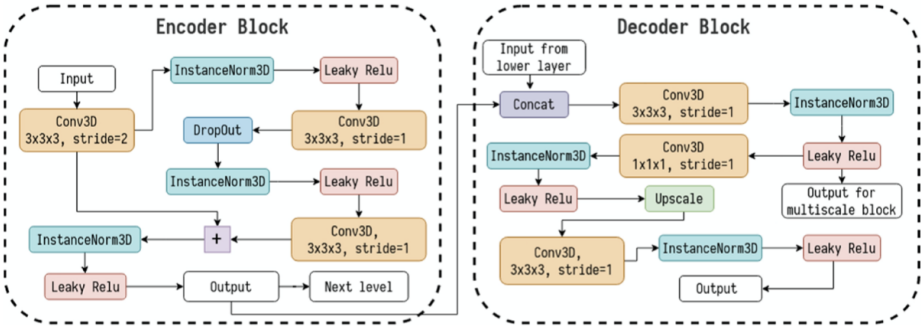

Fig. 3. Block architecture

On the other hand, the decoder block accounts for the localization of the model. The input at each level of the block is concatenated with the output feature map from the corresponding encoder, which presumably is to retrieve the lost information during downsampling [26]. Similarity, each decoding block triplicates the usage of 3D convolution, 3D instance norm and LeakyReLU. After the first end of the repetition, a copy of the current output is saved for the multi-scale handler. On the contrary, the final output of the block is doubled-scaled in width, height and depth, then used as the input for the next level. At the other end of the network, the discriminator is responsible for classifying the model's input to be either the real label or generated. While in the training phase, the presence of the discriminator is necessary for the guidance for the generator to reach its best weight set; the discriminator is no longer needed in the inference stage. We use the same structure as the generator's encoder with an 1x1x1 convolution to produce binary For the discriminator, we use the same structure as in the generator's encoder with an 1x1x1 convolution to produce binary outputs. In segmentation, beside the retrieval of semantic structure, the utilization of low level features is as well of the essence. Therefore, we employ a multi-scale outputs processing layer as a means to gather low level information. As shown in Fig.1,

we take convolution of kernel size 1x1x1 to match them all to channel of 4 at each output scale from the generator. Then, element-wise summation is used for the upscaled feature maps and those are convolved in their upper level. It is also noticeable that we do not adopt the fusion of masks and images such as concatenation as in [23] or element-wise product as in [22]. Although the methods targeted in making the masks harder to distinguish for the discriminator. These fusions did not significantly increase the discriminator's classification loss yet requires more computation than using only masks. However, as the idea of using GAN in segmentation is to take advantage of the optimization of both adversarial loss and segmentation losses, intervention to bring difficulty to discriminator is still a crucial task.

3.4 Modifying loss function

As mentioned in the previous section, constrains on discriminator should be made to enhance the optimization of losses. In practice, we want to restrict the epochs of training generator and discriminator [1]. However, it is sometimes difficult to determine how large each epoch should be for the models' losses to behave as wanted. Therefore, we developed a simple decision algorithm to help tweak the epochs dynamically based on the adversarial loss trends. In general, the idea is based on linear regression to construct a line $Y = \alpha * X + \beta$ from the set of iterations X and its corresponding adversarial loss Y. The increase of the loss values when the slope α is positive, or the large y-intercept β when the loss is stabilizing (i.e. $\alpha \approx 0$) indicate the discriminator's excellence in detecting the genuineness of the masks. Hence, temporary ignorance of the discriminator while reinforcing the segmented masks helps strengthen the aforementioned difficulty. On the other hand, the decrease of adversarial loss or its balance at low values signal the discriminator being fooled by the generator. Therefore, training discriminator in these circumstances is crucial and usually contributes to the segmentation loss. The formula of the slope is demonstrated in Equation 1.

$$slope = \frac{\sum_{i=1}^{|X|}(x_i - \bar{x})(y_i - \bar{y})}{\sum_{i=1}^{|X|}(x_i - \bar{x})^2} \tag{1}$$

where $|X| = |Y|$ is the number of element in the set of iterations X or in list of loss values Y. $\bar{x}$ and $\bar{y}$ is the average of X and Y, respectively. The algorithm (Algorithm 1) is demonstrated as follows. The usage of Algorithm 1 and the loss functions are illustrated in Algorithm 2. After the certain epochs l, the values and iterations of adversarial loss will be clean to guarantee the new loss trend. After the erasure, the user-defined epoch k is assigned to the discriminator epoch N_d to ensure that the discriminator must be trained at least $\frac{N}{k}$ epochs. Otherwise, the whole process is just similar to training residual U-Net. We use mean-square loss for adversarial loss and Dice loss [11] for region loss. Let M be the length of dataset, their formulas are shown in Equation 2

$$L_{adv} = \frac{1}{M}\sum_{i=1}^{M}(D(mask_i) - target)^2 \tag{2}$$

Algorithm 1 Algorithm for discriminator epochs estimation

Input: X, Y **Output:** N_d
Require: $k \in \mathbf{Z}^+$
$\alpha \leftarrow slope$
$\beta \leftarrow \bar{y} - \alpha * \bar{x}$
if $\alpha > 0$ **then** ▷ Increasing loss, train generator
    $N_d \leftarrow 0$
else if $\alpha < 0$ **then** ▷ Decreasing loss, train discriminator
    $N_d \leftarrow k$
else ▷ Stabilizing loss
    if $\beta \geq threshold$ **then** ▷ $threshold$ value of loss function
        $N_d \leftarrow 0$
    else
        $N_d \leftarrow k$
    end if
end if

where D is the discriminator and $target$ is either 0 or 1

$$L_{region} = 1 - DSC = 1 - \frac{2 * \sum_{i=1}^{M} p_i * g_i}{\sum_{i=1}^{M} p_i^2 + \sum_{i=1}^{M} g_i^2 + \epsilon} \tag{3}$$

where DSC is computed as in Equation 4, ϵ is the smoothen value, p and g are the segmented and ground truth tumor, respectively. where N: total number of epochs; N_d: number of epochs of discriminator to be trained in the next epoch i of N; D: discriminator; G: generator and λ: region loss weights.

4 Implementation & results

Our experiments are executed on machine using a Nvidia RTX 3060 12GB GPU, Intel Core i5 2.9-4.3 Hz CPU, and 12 GB RAM. All models are implemented using PyTorch framework. The processing of input data is carried out using Nibable, which is an ubiquitous library for handling Nifti data, and Numpy for mathematical manipulation of the data. For the aforementioned data augmentation, images are randomly cropped with patch size of 112x112x96, which are latter randomly rotated and flipped. As for training optimization, we opt for Adam optimizer [27] with learning rate of 0.001, weight decay of $1e-4$, and decay rates range from 0.5 to 0.999. Based on our observation of loss functions, having trained the models for 100 epochs using the batch size of 3 could guarantee the their convergence. With regards to the inference stage, the similar window size as in training is essential for the model to run properly. However, the patch should neither be cropped randomly nor centered since the boundary of the tumor could be loss. Therefore, for the model's consistency, the segmentation output of one case is calculated sequentially from the patches. The results of ours and other models are shown in Fig 4.

Algorithm 2 Training algorithm

Require: $k \in \mathbf{Z}^+$

for i in $\{0..N\}$ **do**
  if $i \mod l = 0$ **then**
    refresh X and Y
    $N_d \leftarrow k$
  end if
  for j in $\{0..N_d\}$ **do** ▷ train discriminator
    for *sample* in dataset **do**
      $(img, mask_{real}) \leftarrow sample$
      $L_{dis} \leftarrow L_{adv}(D(mask_{real}), 1) + L_{adv}(D(G(img)), 0)$
      backprop(L_{dis})
    end for
  end for
  for *sample* in dataset **do** ▷ train generator
    $(img, mask_{real}) \leftarrow sample$
    $L_{gen} \leftarrow \lambda L_{region}(G(img), mask_{real}) + L_{adv}(D(G(img)), 1)$
    backprop L_{gen}
    insert $iteration_{sample}$ to X
    insert L_{adv} into Y
  end for
  $N_d \leftarrow$ Algorithm 1
end for

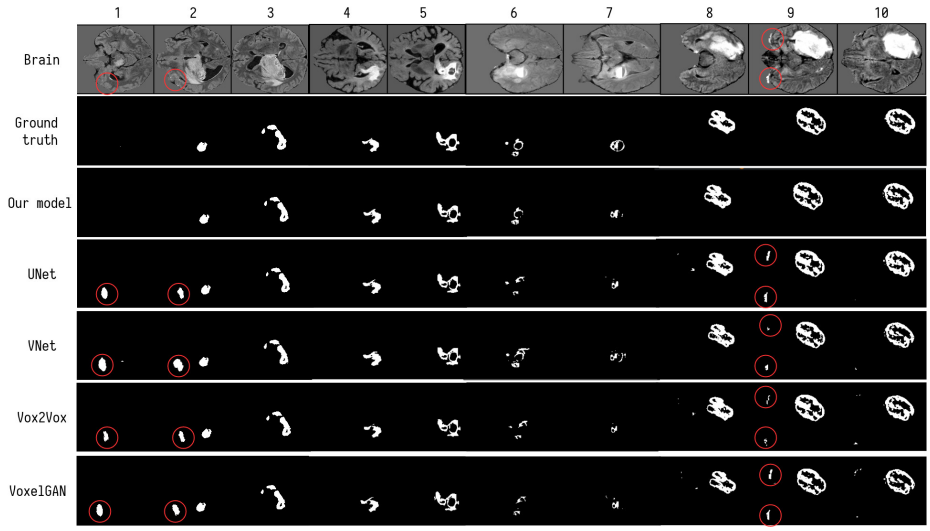

Fig. 4. Comparison of the methods, the red marks show the major false segmentation

5 Discussion and comparison

5.1 Evaluation metrics

We evaluate our model using four metrics, namely Dice score, Jaccard score, Hausdorff distance and average symmetric surface distance (ASSD). The scores are assess to measure the similarities between the ground truth and predicted masks, hence, the higher they are, the better the assessed model. On the contrary, the large distances should refer the substantial differences between the two sets. Dice score is used as a standardized metric to evaluate the similarity of the ground truth and segmented tumor. Given a set of voxels of ground truth as X and that of segmented mask is Y, Dice score of one instance can be calculated as follows: $DSC = \frac{2|X \cap Y|}{|X|+|Y|}$ While Jaccard is also used for evaluating similarities, Jaccard coefficient considers number of the intersection over union rather than the sum of the two sets. The formula of Jaccard score is shown as follows: $JSC = \frac{|X \cap Y|}{|X \cup Y|} = \frac{|X \cap Y|}{|X|+|Y|-|X \cap Y|}$. The third metric is Hausdorff distance which evaluates the difference of the sets of voxels between ground truths and segmented tumor. Intuitively, this distance can be understood as the greatest distance from one point in the first set to its closest point in the other one. We compute the 95th percentile of the metric, which is commonly used in evaluation of BraTS dataset. The formula of this distance is used as follows: $d_H(X,Y) = \max\{\max_{s_X \in S(X)} d(s_X, S(Y)), \max_{s_Y \in S(Y)} d(s_Y, S(X))\}$, where $d(x,y)$ is the Euclidean distance between two voxels x and y, and $S(X)$, $S(Y)$ are the set of surface voxels of ground truths X and segmented masks Y, respectively. Finally, ASSD evaluates the average of symmetric distances between the voxels on the boundary of ground truth and segmented tumors. The metric is described as follows: $d_{ASSD}(X,Y) = \frac{\sum_{s_X \in S(X)} d(s_X, S(Y)) + \sum_{s_Y \in S(Y)} d(s_Y, S(X))}{|S(X)|+|S(Y)|}$.

5.2 Evaluation and discussion

In Fig.4, our model achieved competitive results. As marked in picture 1, 2 and 9 of the figure, most evaluated models are sensitive to noises, which prompted segmentation regions where no tumors are found in the ground truth. Our model, however, did not show such tendency. It can be argued that models that are insensitive may result in losing information in some cases. Nevertheless, as shown in picture 2, 8, 9 and 10 of the figure, our model is adept at segmenting normal round-shaped tumors despite distinct scales. Furthermore, our model showed competency in detecting abnormal tumor with variety of shapes as in picture 3, 4, 5. Finally, for cases that are considered difficult for all models, such as thin boundary or small tumors in picture 6 and 7, our model, while did not successfully capture the tumors to the fullest, yielded results that are not distorted as other models'. Regarding the quantitative results shown in Table 1, our models were compared against 2 original CNN-based, i.e. U-Net and V-Net, and 2 GAN-based models, i.e. VoxelGAN and Vox2Vox. Although our residual U-Net alone can achieve adequate results, its scores were relatively smaller than those

of V-Net and Vox2Vox. By using the proposed methodology, our multi-scale GAN gained highest scores and smallest distances in whole tumor assessment and increased the baseline model's scores of enhancing tumor and tumor core classes significantly (roughly 3 to 6%). Furthermore, while there were minor increase of approximately 2.7mm average in both Hausdorff distance and ASSD of enhancing tumor and tumor core in comparison with the original ResU-Net, these distances are still substantially smaller than those of other models.

Model	**Label**	**Dice (%)**	**Jaccard (%)**	**Haudorff(mm)**	**ASSD (mm)**
Unet	ET	77.975	72.112	19.866	7.958
	WT	81.130	71.690	33.538	13.473
	TC	73.632	65.715	25.055	9.783
VoxelGAN	ET	77.683	71.795	26.292	9.745
	WT	82.586	73.738	31.702	12.798
	TC	77.192	71.079	33.768	12.513
Vox2Vox	ET	79.745	74.823	18.892	6.855
	WT	83.238	75.199	30.996	12.370
	TC	78.210	72.440	26.013	9.6722
Vnet	ET	78.332	73.581	14.918	5.527
	WT	86.411	79.153	18.109	6.351
	TC	75.478	68.846	18.491	7.066
Our ResUnet (without GAN)	ET	77.964	72.190	**6.382**	**2.349**
	WT	88.103	80.930	16.505	6.0193
	TC	80.366	75.569	***8.431***	***3.523***
Our multi-scale GAN	ET	**82.318**	**78.487**	9.616	3.367
	WT	**88.599**	**81.466**	**13.323**	**5.123**
	TC	***83.108***	***79.705***	13.180	5.416

Table 1. Comparison of models' accuracy. The best results of ET, WT, and TC are highlighted in underlined-bold, bold, and italics-bold, respectively.

6 Conclusion

In this research, we proposed a segmentation model using GAN models. The novelty of our method focused on the construction of multi-scale GAN, the modification of training process and loss functions. Furthermore, we performed data pre-processing, developed a visualization application for 3D brain MRI and tumors, evaluated our model quantitatively and qualitatively against other 4 models. Our model achieved the most prominent results of all graded models. In the future, we consider to improve the current model and enhancing its ability in detecting small, thin tumor regions. Additionally, more models, especially GAN-based, should also be evaluated. As we have only assessed ours and other mentioned models on the validation set separated from BraTS2021's training set, we intend to test our model on the challenge's platform. Finally, the development of our model could be more alluring if we take greater advantage of GAN in other aspects beyond segmentation.

7 Acknowledgment

This research is funded by International University, VNU-HCM under grant number SV2021-IT-02.

References

1. Goodfellow, Ian and Pouget-Abadie, Jean and Mirza, Mehdi and Xu, Bing and Warde-Farley, David and Ozair, Sherjil and Courville, Aaron and Bengio, Yoshua. Generative adversarial nets. Journal of Advances in neural information processing systems. volume. 27, 2014.
2. Maji, D., Sigedar, P., and Singh, M. Attention Res-UNet with Guided Decoder for semantic segmentation of brain tumors. Biomedical Signal Processing and Control, 71, [103077]. https://doi.org/10.1016/j.bspc.2021.103077, 2022.
3. Zhaoa, ZengShun and Wang, Yulong and Liu, Ke and Yang, Haoran and Sun, Qian and Qiao, Heng. Semantic Segmentation by Improved Generative Adversarial Networks. Computer Vision and Pattern Recognition (cs.CV), FOS: Computer and information sciences, FOS: Computer and information sciences. doi 10.48550/ARXIV.2104.09917, 2021.
4. Baid, Ujjwal et. al. The RSNA-ASNR-MICCAI BraTS 2021 Benchmark on Brain Tumor Segmentation and Radiogenomic Classification. arXiv, doi. 10.48550/ARXIV.2107.02314, 2021.
5. Sinh Van Nguyen, Ha Manh Tran and Marcin Maleszka. Geometric modeling: Background for processing the 3D objects. Journal of Applied Intelligence Vol. 51, pp. 6182–6201 (2021), doi.org/10.1007/s10489-020-02022-6, 2021.
6. Van Sinh Nguyen, Manh Ha Tran, Hoang Minh Quang Vu. An Improved Method for Building A 3D Model from 2D DICOM. Proceedings of International Conference on Advanced Computing and Applications (ACOMP), ISBN: 978-1-5386-9186-1, pp. 125-131, IEEE 2018.
7. Sinh N.V. and Ha T.M. and Truong L.S. Application of Geometric Modeling in Visualizing the Medical Image Dataset. Journal of Springer Nature of Computer Science. SN COMPUT. SCI. Vol.1, Num. 5, pp. 254 (2020).
8. Ronneberger, Olaf and Fischer, Philipp and Brox, Thomas. U-net: Convolutional networks for biomedical image segmentation. International Conference on Medical image computing and computer-assisted intervention, pp. 234-241, Springer 2015.
9. Nabil Ibtehaz and M. Sohel Rahman. MultiResUNet. Rethinking the U-Net architecture for multimodal biomedical image segmentation. Journal of Neural Networks, Vol. 121, pp. 74–87, doi. 10.1016j.neunet.2019.08.025, 2020.
10. Zhou, Zongwei and Siddiquee, Md Mahfuzur Rahman and Tajbakhsh, Nima and Liang, Jianming. Journal of IEEE Transactions on Medical Imaging, doi.10.48550/arXiv.1912.05074. 2019.
11. Milletari, Fausto and Navab, Nassir and Ahmadi, Seyed-Ahmad. V-net: Fully convolutional neural networks for volumetric medical image segmentation. Th fourth international conference on 3D vision (3DV), pp. 565-571, IEEE, 2016.
12. Ozgun Cicek and Abdulkadir, Ahmed and Lienkamp, Soeren S. and Brox, Thomas and Ronneberger, Olaf. 3D U-Net Learning Dense Volumetric Segmentation from Sparse Annotation. Computer Vision and Pattern Recognition (cs.CV), FOS: Computer and information sciences, FOS Computer and information sciences. https://arxiv.org/abs/1606.06650, 2016.

13. Zhang, Zhengxin and Liu, Qingjie and Wang, Yunhong. Road Extraction by Deep Residual U-Net. IEEE Geoscience and Remote Sensing Letters, Vol. 15(5), ISSN: 1558-0571, DOI. 10.1109/lgrs.2018.2802944, 2018.
14. Li, Ruirui and Liu, Wenjie and Yang, Lei and Sun, Shihao and Hu, Wei and Zhang, Fan and Li, Wei. DeepUNet: A Deep Fully Convolutional Network for Pixel-level Sea-Land Segmentation. doi. 10.48550/ARXIV.1709.00201. arXiv, 2017.
15. Oktay, Ozan and Schlemper, Jo and Folgoc, Loic Le and Lee, Matthew and Heinrich, Mattias and Misawa, Kazunari and Mori, Kensaku and McDonagh, Steven and Hammerla, Nils Y and Kainz, Bernhard and Glocker, Ben and Rueckert, Daniel. Attention U-Net: Learning Where to Look for the Pancreas. arXiv. doi. 10.48550/ARXIV.1804.03999, 2018.
16. H. Chen, Z. Qin, Y. Ding and T. Lan, Brain Tumor Segmentation with Generative Adversarial Nets. 2019 2nd International Conference on Artificial Intelligence and Big Data (ICAIBD), 2019, pp. 301-305, doi: 10.1109/ICAIBD.2019.8836968.
17. Myronenko, Andriy. 3D MRI brain tumor segmentation using autoencoder regularization. International MICCAI Brainlesion Worksho, pp. 311-320, Springer 2018.
18. Jiang, Zeyu and Ding, Changxing and Liu, Minfeng and Tao, Dacheng. Two-stage cascaded U-Net: 1st place solution to BraTS challenge 2019 segmentation task. International MICCAI brainlesion workshop. pp.231-241, Springer 2019.
19. Isensee, Fabian and Jäger, Paul F and Full, Peter M and Vollmuth, Philipp and Maier-Hein, Klaus H. nnU-net for brain tumor segmentation. International MICCAI Brainlesion Workshop, pp. 118-132, Springer, 2020.
20. Futrega, Micha and Milesi, Alexandre and Marcinkiewicz, Michal and Ribalta, Pablo. Optimized U-Net for Brain Tumor Segmentation. arXiv preprint arXiv:2110.03352, 2021.
21. Luu, Huan Minh and Park, Sung-Hong. Extending nn-UNet for brain tumor segmentation. Image and Video Processing (eess.IV); Computer Vision and Pattern Recognition, doi.org/10.48550/arXiv.2112.04653, 2021.
22. Yuan Xue and Tao Xu and Han Zhang and L. Rodney Long and Xiaolei Huang. SegAN: Adversarial Network with Multi-scale L1 Loss for Medical Image Segmentation. Journal of Neuroinfomatics. Vol. 16, Num 3-4, pp. 383-392, 2018.
23. Cirillo, Marco Domenico and Abramian, David and Eklund, Anders. Vox2Vox: 3D-GAN for brain tumour segmentation. International MICCAI Brainlesion Workshop. pp. 274-284, Springer 2020.
24. Ujjwal Baid, et al., The RSNA-ASNR-MICCAI BraTS 2021 Benchmark on Brain Tumor Segmentation and Radiogenomic Classification. Computer Vision and Pattern Recognition, doi.org/10.48550/arXiv.2107.02314, 2021.
25. Kaiming and Zhang, Xiangyu and Ren, Shaoqing and Sun, Jian. Deep Residual Learning for Image Recognition. Computer Vision and Pattern Recognition (cs.CV), FOS: Computer and information sciences, FOS: Computer and information sciences, doi 10.48550/ARXIV.1512.03385, 2015.
26. Drozdzal, Michal and Vorontsov, Eugene and Chartrand, Gabriel and Kadoury, Samuel and Pal, Chris. The Importance of Skip Connections in Biomedical Image Segmentation. Computer Vision and Pattern Recognition (cs.CV), FOS: Computer and information sciences, FOS: Computer and information sciences, doi.10.48550/ARXIV.1608.04117, 2016.
27. Kingma, Diederik P. and Ba, Jimmy. Adam: A Method for Stochastic Optimization. Machine Learning (cs.LG), FOS: Computer and information sciences, FOS: Computer and information sciences, doi.10.48550/ARXIV.1412.6980, 2014.