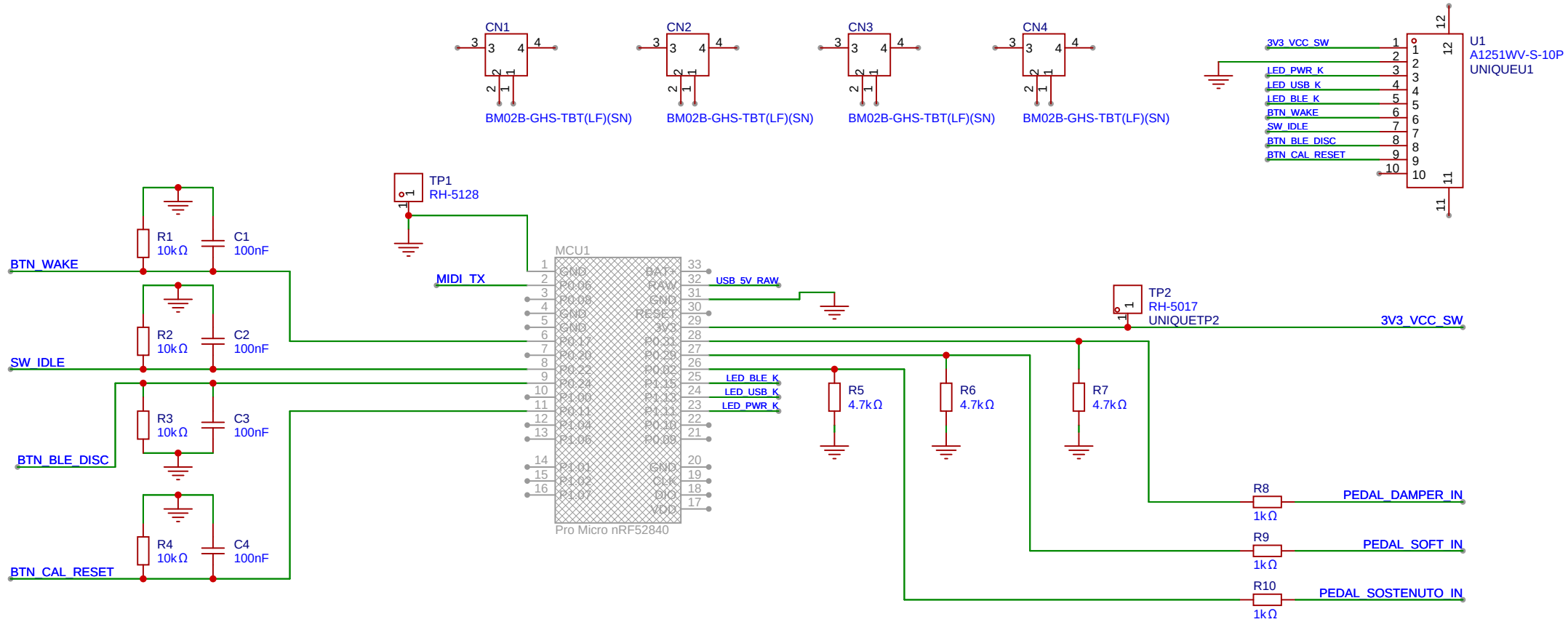

Schematic	Core board	Create at	2025-09-05
		Update at	2025-09-28
Board	Core board	Page	MC
Drawn	heathen.pro	Midal MIDI Interface	
Reviewed			
		Version	Size	Page 1 Total 3
EasyEDA		V1.0	A4	EasyEDA.com