ITEM NO.	Number	DESCRIPTION	Manufacturer Name	Revision	QTY.
1	1099184-00-A	BAR			1
2	1080657-00-A	DIFF-BRNG-PULL-COLLAR			1
3	1099185-00-A	SCREW-RACE			1
4	1099186-00-A	FORCING-SCREW			1
5	FABM10-130	FULLY-THREADED-STUD	MISUMI		2
6	1099183-00-A	DIFF-STAND			1
7	1099181-00-A	BASE-PLATE			1
8	1099182-00-A	UPRIGHT			2

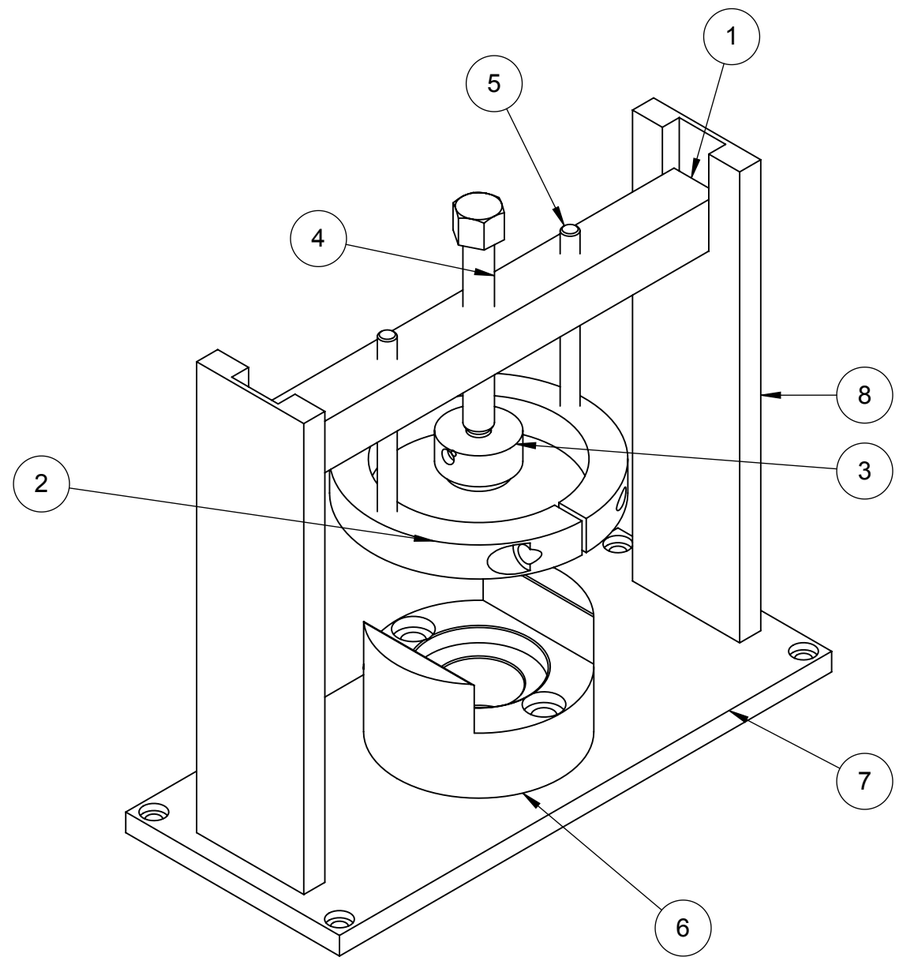

REVISIONS

DATE	REV	RELEASE NOTES	INITIALS
8/2/2016	1	INITIAL RELEASE	VS

MATERIAL SPECIFICATIONS

M1. DEBURR AND BREAK SHARP EDGES 0.1mm TO 0.2mm UNLESS OTHERWISE SPECIFIED.
M2. NO CHANGES SHALL BE MADE TO RAW MATERIALS OR ASSOCIATED PROCESSING MATERIALS WITHOUT THE PRIOR WRITTEN CONSENT OF TESLA MOTORS.

DIMENSIONAL NOTES

D1. THE MASTER SOURCE OF INFORMATION FOR THIS DRAWING IS A COMPUTER DATABASE.
D2. DO NOT SCALE PRINT.
D3. SOME FEATURES ARE NOT FULLY DIMENSIONED. FOR THOSE FEATURES, REFER TO THE 3D CAD DATA SUPPLIED ALONG WITH THIS DRAWING. CAD DATA TOLERANCES = +/- 0.2mm. THIS REFERENCE TO THE CAD DATA APPLIES ONLY TO FEATURES THAT DIRECTLY REFERENCE THIS NOTE.
D4. DIMENSIONS APPLY AFTER FINISHING OPERATIONS

GENERAL NOTES

G1. APPLY PART NUMBER AND REVISION IN THE AREA SHOWN USING ENGRAVING, ETCHING, STEEL STAMP, OR EQUIVALENT METHOD.

TESLA

MATERIAL
SEE BOM

SURFACE PREPARATION

FINISH

DRAWN BY
V.SILVA

DESIGNED BY

THE INFORMATION CONTAINED HEREIN IS DEEMED TO BE CONFIDENTIAL, PROPRIETARY, AND A TRADE SECRET OF TESLA MOTORS. THIS INFORMATION MAY NOT BE USED, REPRODUCED, OR DISCLOSED AS THE DIRECT OR INDIRECT BASIS FOR THE DEVELOPMENT, MANUFACTURE, OR SALE OF PROCESSES OR PRODUCTS WITHOUT THE EXPRESSED WRITTEN CONSENT OF TESLA MOTORS.

INTERPRET DIMENSIONS AND TOLERANCES PER ISO 1101, 128, 129

THIRD ANGLE PROJECTION

DIMENSIONS ARE IN MM
TOLERANCES:
ANGULAR ±0.5°
FRACTIONAL ±
DECIMALS X ±1
X.X ±0.3
X.XX ±0.10

SCALE 1:5

SHEET SIZE B

PART NAME
ASSY,DIFF-GRCS-BRNG-PULLER

PART NUMBER
1099179-00-A

DO NOT FABRICATE IF REVISION IS OBSCURE OR BLANK

REVISION 1

SHEET 1 OF 1