Forside

UNIVERSITY OF OSLO

The Faculty of Mathematics and Natural Sciences

Written examination IN2140

2024 Spring

Duration: 28. May 2023, 09:00 to 13:00

Permitted aids: None. A calculator and a decimal-hexadecimal conversion table (pdf) is available in Inspera.

It is important that you read this front page before you start. If you need to use the zoom function exam set you can hold down ctrl and click + or - on the numerical keyboard.

1 OS - Page table lookup

Assume you have a paging system with **16-bit addressing** (16-bit address room) and **4 KB pages**. There are **12 physical page frames** in the system. The memory addresses start at 0 and are contiguous. The page table is given as follows:

Page table

Page table index	Present bit	Page frame
0	1	0001
1	0	0110
2	0	0000
3	1	1001
4	1	0010
5	1	1111
6	1	1000
7	0	0111
8	1	0011
9	0	0001
10	1	0100
11	0	1000
12	1	0101
13	0	1011
14	0	0101
15	1	0110

Exercise 1:
Given the following logical/virtual address,
1111 0101 1111 1111
which statement or physical address is correct (see alternatives below)?

A: The page is not in memory, and must be fetched from the disk
B: The input address is not a valid address
C: The physical frame number is not valid
D: 0110 0101 1111 1111
E: 0101 1111 0011 0110
F: 0001 0101 1111 1111
G: 1100 1100 1101 0001

Exercise 2:
Given the following logical/virtual address,
0101 0101 1011 1010
which statement or physical address is correct (see alternatives below)?

A: The page is not in memory, and must be fetched from the disk
B: The input address is not a valid address
C: The physical frame number is not valid
D: 1111 1010 1011 1101
E: 1101 1011 1010 1111

F: 1111 0111 1011 1010
G: 0100 1101 1011 1010

Exercise 3:
Given the following logical/virtual address,
0111 1011 1001 1110
which statement or physical address is correct (see alternatives below)?

A: The page is not in memory, and must be fetched from the disk
B: The input address is not valid
C: The physical frame number is not valid
D: 0111 1011 1001 1110
E: 1011 1111 1110 0111
F: 1000 1011 1111 1110
G: 1011 1111 1110 1111

Exercise 4:
Given the following logical/virtual address,
1100 1100 0001 1111
which statement or physical address is correct (see alternatives below)?

A: The page is not in memory, and must be fetched from the disk
B: The input address is not a valid address
C: The physical frame number is not valid
D: 1100 0001 1111 0011
E: 0101 0011 0001 1100
F: 1001 1100 1100 0001
G: 0101 1100 0001 1111

For each of the exercises above, select the correct answer alternative in the table below...

	A	B	C	D	E	F	G
Exercise 1	○	○	○	○	○	○	○
Exercise 2	○	○	○	○	○	○	○
Exercise 3	○	○	○	○	○	○	○
Exercise 4	○	○	○	○	○	○	○

Maximum marks: 10

2 OS - Page replacement

Consider a system with 3 physical page frames of memory. An application running on this system (alone) has the following page reference sequence (reference string - the order of page accesses):

(accessed first) **A D B A G A C B A D F A E D A D F A G F C F E C A C** (accessed last)

What is the number of page faults that would occur for each of the following page replacement algorithms:

First-in-first-out (FIFO) :

Second chance (clock):

Lease recently used (LRU):

Maximum marks: 10

3 OS - Disk Scheduling

Assume you have the following sequence of disk requests (given by the track numbers)
10, 25, 8, 24, 32, 2, 6, 38, 21, 14, 3, 39
where 10 is the first in the queue, and 39 is the last. Assume further that the disk head is currently moving from lower to higher track numbers and is currently located over (just read) track 20. The disk is 40 tracks large (track 1 to 40). Calculate how many tracks the head traverse over if you use the following disk scheduling algorithm...

FIFO:

SCAN:

C-SCAN:

SSTF:

Maximum marks: 10

4 OS - CPU scheduling

Assume you have an othervise empty system and suppose that the user processes in the table arrive for execution at the times indicated (it does not matter, but assime the times are in milliseconds). Each process will run for the given amount of processing time, and have a priority as listed in the table (lower value is higher priority - P2 has highest priority, P1 has the lowest). For this task, we define **turnaround time** as finishing time minus arrival time. Note that when a new process arrives, it is inserted at the *end* of the queue. **If a process is interrupted/preemted for some reason at the exact same time as the new proess, it is placed behind the new in the queue.** ***(added sentence that were lost in som update - remove later)***

Prosess ID	Priority	Required processing time	Arrival time
P1	3	100	0
P2	1	200	10
P3	2	50	30

Exercise 1

Assume we use the **first-come-first serve (FCFS)** nonpreemptive scheduling.

What is the turnaroud time for process P2? :

When is process P3 allowed to start? :

Exercise 2

Another nonpreemptive scheduling algorithm is **shortest job first (SJF)**. Instead of just selecting the first, it selects the process with the shortest job - the lowest required processing time.

Which process is running at t = 110? Process (insert 1, 2 or 3) runs at t = 110.

Exercise 3

Assume that you use **round-robin (RR)** with timeslices of 10, but still no preemtion or priorities.

At what time does P3 now start? :

What is the turnaroud time for process P1? :

Exercise 4

If we use a scheduling algorithm supporting **priorities and preemtion**, ...

What is the turnaroud time for process P2? :

Which process is running at t = 250? Process (insert 1, 2 or 3) runs at t = 250.

Exercise 5

Assume we introduce preemtion for the SJF algorithm. This means that whenever a new process arrives in the queue, the scheduler picks the job with the **shortest remaining time**. In this system, ...

What is the turnaround time for P1? :

What is the turnaround time for P3? :

Maximum marks: 10

5 OS - Various Multiple Choice

In each of the exercises below, you should select ONE correct answer and insert it into the table at the bottom.

Exercise 1
An operating system ...

A: is the same as a web server
B: always lets the person who has the highest education get priority
C: is executed like a normal process with rights like a normal user process
D: is a collection of functions that work like a layer between hardware and users
E: gives users direct access to hardware

Exercise 2
A traditional UNIX scheduler enforces an inverse relationship between priority numbers and priorities: the lower the number, the higher the priority. Furthermore, the scheduler recalculates process priorities, and assume the recalculation is performed using the following function:

Priority = (recent CPU usage / 2) + base

where "base" = 60 and "recent CPU usage" refers to a value indicating how often a process has used the CPU since priorities were last recalculated. Assume that recent CPU usage for process P_1 is 40, for process P_2 is 18, and for process P_3 is 10. What will be the new priorities for these three processes when priorities are recalculated?

A: $P_1 = 40$, $P_2 = 18$, $P_3 = 10$
B: $P_1 = 140$, $P_2 = 98$, $P_3 = 80$
C: $P_1 = 80$, $P_2 = 69$, $P_3 = 65$
D: $P_1 = 40$, $P_2 = 78$, $P_3 = 65$
E: $P_1 = 80$, $P_2 = 78$, $P_3 = 70$

Exercise 3
The UNIX scheduler ...

A: does not adjust priorities for processes.
B: raises the priority of CPU-bound processes.
C: is nonpreemptive.
D: lowers the priority of CPU-bound processes.
E: schedules the processes according to expected length of the job.

Exercise 4
The *fork()* system call ...

A: creates a new process which is a copy of the process that made the call
B: executes a completely new program given by the parameter pointing to an executable file
C: generates more scheduling queues
D: branches the execution in a program and executes every branch sequentially

E: allows a process to share memory with another process

Exercise 5
To manage a file's data blocks on the disk, the "File Allocation Table" (FAT) file system use ...

A: chaining in media
B: chaining in map
C: table of pointers
D: extents
E: records

Exercise 6
A system call is a function call ...
A: which is executed when an interrupt occurs
B: called by the operating system to run user-level services
C: called by the user application to run operating system services
D: which is executed when a page fault is issued
E: starting the device drivers

Exercise 7
Shared memory is ...
A: an inter-process communication (IPC) mechanism where processes can operate and update the same physical memory.
B: a shared internal bus used for external memory devices.
C: a memory shared between external devices (like a keyboard) and the OS.
D: impossible realise (implement) due to the protection mechanisms in the OS.
E: a signal which may be sent to the memory in order to read the value from a variable.

Exercise 8
What is an exception?
A: A system call used for calling unusual OS functions.
B: A signal used to preempt/interrupt a process caused by synchronous events.
C: A type of processor that manages super user commends.
D: A way to compile an OS kernel.
E: A system call to replace the instructions in a process with other instructions.

Exercise 9
Which assertion is correct when talking about memory hierarchies?
A: The OS uses another type of memory compared to user processes.
B: The (primary) memory is very much faster compared to a hard drive.
C: The different memory types in a computer is equally fast.
D: There are no memory hierarchies, all types of memory are on the same level.
E: None of the assertions above is correct.

Exercise 10
A page fault...
A: occurs every time a process tries to access a page in memory.
B: is an error in a specific page frame. er en feil i en spesifikk sideramme.
C: occurs when a process tries to access a page that is not present in memory.

D: is a reference to a page that belongs to another program.
E: description does not mach any of the alternatives above.

For each of the exercises above, select the correct answer alternative in the table below…

	A	B	C	D	E
1	○	○	○	○	○
2	○	○	○	○	○
3	○	○	○	○	○
4	○	○	○	○	○
5	○	○	○	○	○
6	○	○	○	○	○
7	○	○	○	○	○
8	○	○	○	○	○
9	○	○	○	○	○
10	○	○	○	○	○

Maximum marks: 10

6 OS - Various multiple choice exercises

In each of the exercises below, you should select ONE correct answer.

Exercise 1:

Which of the following statements are correct with respect to disk scheduling?

A: Shortest seek time first (SSFT) may lead to starvation.

B: Circular SCAN (C-SCAN) is a bi-directional algorithm executing requests as the disk head moves both ways.

C: SCAN serves requests in a first-come-first-serve order as it scans the queue.

D: Preemptive scheduling algorithms are more efficient than non-preemptive algorithms.

E: If a process reads files sequentially, it does not matter which scheduling algorithm is used.

Exercise 2:

Which of the following items are **not true** about NTFS?

A: NTFS is a file system in Windows.

B: NTFS uses chaining-in-media to manage disk blocks

C: NTFS can store file data directly inside its metadata record in the master file table.

D: The master file table is a table of 1 KB records.

E: A "run" in NTFS is similar to "extents" in Unix file systems.

Exercise 3:

Which statement regarding the organisation of a process' memory is correct?

A: A program's instructions are stored in the *text/code segment*.

B: Dynamic memory (e.g., allocated with malloc) is stored on the stack.

C: A process does not have any memory organisation.

D: The *stack segment* has a fixed size.

E: A program's instructions are stored in the *data segment*.

Exercise 4:

A monolithic operating system kernel ...

A: ... is the part of the operating system that manages device drivers.

B: ... is the part of an operating system that handles monolithic files.

C: ... is the part of the operating system that handles interrupts.

D: ... has minimal functionality where other services are implemented in server processes running in user space.

E: ... is a kernel where all functionality is linked into a single object.

Exercise 5:

Which of these events invokes the CPU scheduler?

A: Function calls

B: Function termination

C: Process creation

D: Process termination

E: Process calling *execve()*

Exercise 6:

Which statement is true about process states?

A: When a process has spent its time on the CPU, the scheduler moves the process from "running" to "ready".

B: A process waiting for an external I/O operation is in the "ready" state.

C: A newly created process is initially placed in the "blocked" state.

D: When an external I/O operation finishes, the process is moved from "blocked" to "running".

E: If a process is waiting in the "ready" queue longer than a set threshold, the process is terminated.

For each of the exercises above, select the correct answer alternative in the table below...

	A	B	C	D	E
Exercise 1	○	○	○	○	○
Exercise 2	○	○	○	○	○
Exercise 3	○	○	○	○	○
Exercise 4	○	○	○	○	○
Exercise 5	○	○	○	○	○
Exercise 6	○	○	○	○	○

Maximum marks: 6

7 Net - (dis-)advantages of network architectures

Three different structures were discussed in the lecture, recursive, component-based and layered. Select which of following statements describe the properties of each of them best.

1. A Select alternative (component-based, layered, recursive) architecture expects that algorithms are implemented once and reuse them wherever a task requires it

2. A Select alternative (component-based, recursive, layered) architecture expects that network challenges are solved in the closest possible physical region using the most specific understanding of the challenge

3. A Select alternative (components-based, layered, resursive) architecture expects that services can be implemented in many ways if APIs to the neighbouring services remain unchanged and it use and provides the same service as before

4. A Select alternative (recursive, layered, component-based) architecture considers network functions as a set of services

5. A Select alternative (layered, recursive, component-based) architecture considers networks functions as a set of algorithms

6. A Select alternative (component-based, layered, recursive) architecture considers networks functions as a set of communicating processes

7. A Select alternative (component-based, layered, recursive) architecture ignores the benefits of reusing the same algorithms to solve different tasks

8. A Select alternative (component-based, layered, recursive) architecture has a large configuration overhead every time an end-to-end service is requested

9. A Select alternative (recursive, component-based, layered) architecture has a large number of negotiation steps every time an end-to-end services is requested

10. A Select alternative (recursive, component-based, layered) architecture requires a larger number of different APIs than the other two architectures

Maximum marks: 5

8 Net - OSI terminology

The OSI model has introduced generic terms to talk about the functions of a protocol layer, and the interaction between the layers. Drag the terms found at the bottom of the figure into the appropriate location of the drawing.

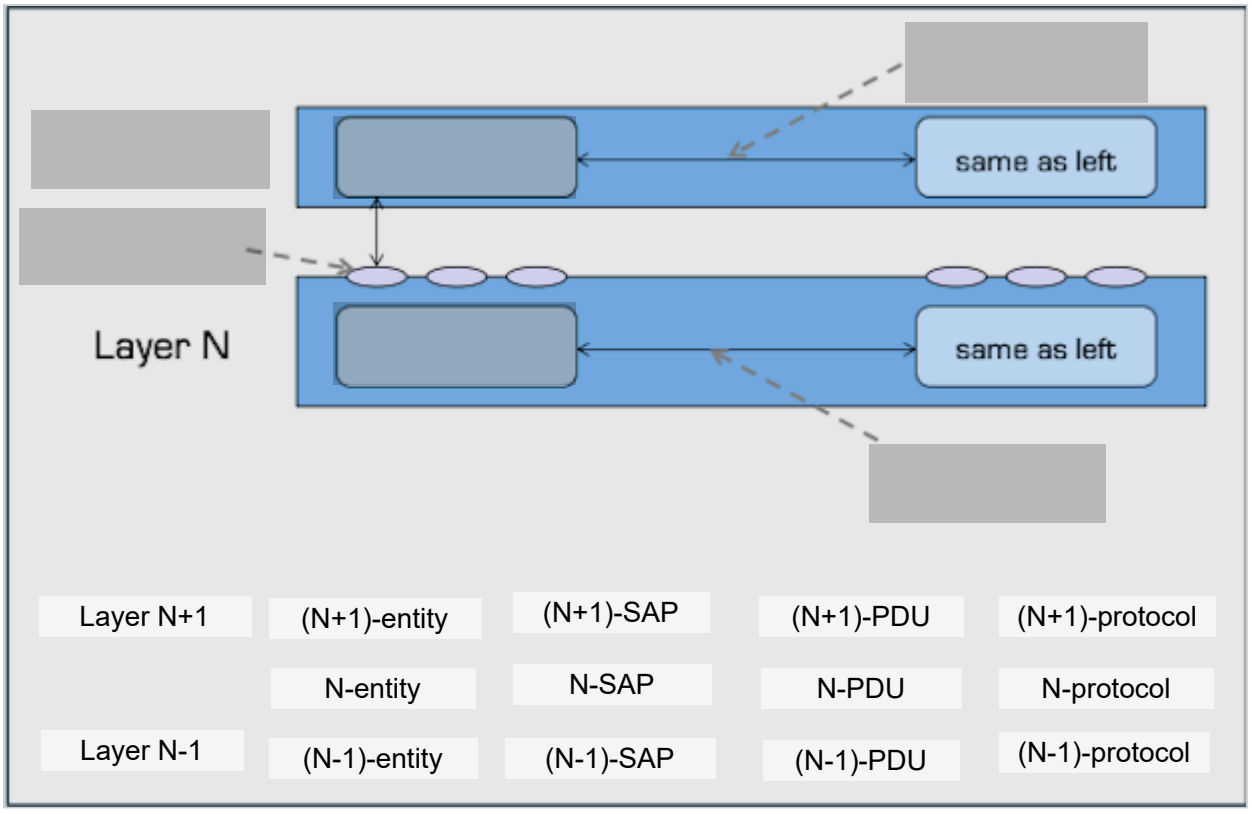

Maximum marks: 5

9 Net - Tasks of an N-protocol

What does a protocol at layer N (the N-protocol) define?

the format of messages

Select alternative (NO, YES)

the order of messages

Select alternative (YES, NO)

the content of messages

Select alternative (YES, NO)

the actions taken when a message has been transmitted

Select alternative (YES, NO)

the actions taken when receiving a message

Select alternative (NO, YES)

the actions taken after delivering a message to layer N+1

Select alternative (NO, YES)

how messages are exchanged between two or more communicating entities

Select alternative (YES, NO)

the services offered to layer N+1

Select alternative (YES, NO)

the services of layer N-1 that are used by layer N

Select alternative (NO, YES)

how the protocol is implemented

Select alternative (NO, YES)

Maximum marks: 5

10 Net - TCP and UDP services

TCP and UDP are the two main transport protocols in the Internet today. Which of the protocols is offering the following services?

Select alternative (TDP, UDP, NONE OF THE TWO)	connectionless service
Select alternative (UDP, NONE OF THE TWO, TCP)	connection-oriented service
Select alternative (UDP, NONE OF THE TWO, TCP)	ordered data delivery
Select alternative (TCP, UDP, NONE OF THE TWO)	partially ordered data delivery
Select alternative (TCP, UDP, NONE OF THE TWO)	unordered data delivery
Select alternative (TCP, NONE OF THE TWO, UDP)	reliable data transfer
Select alternative (UDP, TCP, NONE OF THE TWO)	unreliable data transfer
Select alternative (TCP, UDP, NONE OF THE TWO)	congestion control
Select alternative (NONE OF THE TWO, UDP, TCP)	multicasting
Select alternative (NONE OF THE TWO, TCP, UDP)	multihoming

Maximum marks: 5

11 Net - netmasks

An administrator for an old class-B network (prefix 16 bits) with IP-address 137.215.0.0 will partition it into 16 subnetworks of equal size. They must use all addresses. We call these networks "net1" to "net16".

"net1" contains the numerically lowest addresses, "net2" contains the next block of addresses, etc.

How many addresses will be given to each of the 16 subnetworks? [ ]

What are the IP address and the nettmask for the first of the 16 subnetworks (i.e. the subnetwork with the lowest numeric IP address)?

IP address: 137. [ ] . [ ] .0

Netmask: 255. [ ] . [ ] . [ ]

A router must decide into which network it must forward a packet with a given destination address. Which operation does the router use to make that decision?

network address = destination address [Select alternative] (OR, AND, MINUS, XOR, PLUS, NOT) netmask

Which network does it choose for the following destinations:

137.215.12.14	[Select alternative] (net1, net2, net3, net4, net5, net6, net7, net8, net9, net10, net11, net12, net13, net14, net15, net16, send the packet to another network)
137.214.7.3	[Select alternative] (net1, net2, net3, net4, net5, net6, net7, net8, net9, net10, net11, net12, net13, net14, net15, net16, send the packet to another network)
137.215.196.245	[Select alternative] (net1, net2, net3, net4, net5, net6, net7, net8, net9, net10, net11, net12, net13, net14, net15, net16, send the packet to another network)

Maximum marks: 10

12 Net - Flow control general statements

There are several well-known flow control mechanisms that operate at different layers, in different environments, and that should therefore have different properties.

The main task of a flow control protocol at layer N is to Select alternative (ensure that the sender does not send faster than receivers can process data, ensure that data arrives at receivers in the right order, ensure that the sender does not send faster than the network can process data, ensure that data arrives at the receiver without errors). This is the main distinction from congestion control protocols, whose main task is to

Select alternative (ensure that data arrives at the receiver without errors, ensure that data arrives at receivers in the right order, ensure that the sender does not send faster than the network can process data, ensure that the sender does not send faster than receivers can

process data). However, flow control is nearly always implemented to also Select alternative (ensure that the sender does not send faster than the network can process data, ensure that data arrives at the receiver without errors, ensure that the sender does not send faster than receivers can process data, ensure that data arrives at receivers in the right order).

This is only possible if layer N-1 provides Select alternative (full-duplex, error-free, half-duplex, ordered, uni-directional, bi-directional) service to layer N.

Most Select alternative (data link, physical, network, transport) layer protocols are designed for very short distances and few directly connected neighbours and can therefore use

Select alternative (stop-and-wait, a credit mechanism, go-back-N, selective repeat, no flow control, sliding window).

Connection-oriented Select alternative (data link, transport, network, physical) layer protocols are designed for long distances. They are therefore usually using

Select alternative (a credit mechanism, a selective repeat mechanism, a go-back-N mechanism, no flow control, a stop-and-wait mechanism, a sliding window mechanism).
When it is also expected that the number of connections can potentially be very large and change quickly, it is typical to select a specific variant of this flow control mechanism. It is called

Select alternative (selective repeat, sliding window, stop-and-wait, a credit mechanism, go-back-N) and can deal with situations where the memory demand for buffer space can change

drastically due to a changing number of communicating Select alternative (processes, neighbours, programs, layers).

Maximum marks: 5

13 Net - Flow control sequence numbers

Flow control with error correction relies on sequence numbers to detect errors.

For which of the following 3 mechanisms are the statements below true?

1. stop-and-wait
2. selective repeat
3. go-back-N

Be mindful of facts that can be true for several mechanisms than you first think.

Select alternative (1 and 3, 2, none, 1, 2 and 3, 1, 2 and 3, 3, 1 and 2)	The sequence number space has only two values.
Select alternative (2 and 3, 3, 1, 1, 2 and 3, 1 and 2, 1 and 3, 2, none)	The number of packets in flight (packets that have been sent but not acknowledged) can only be half of the sequence number space.
Select alternative (1 and 3, 1, 2 and 3, 1 and 2, none, 2, 1, 3, 2 and 3)	The number of packets in flight must be at most one lower than the size of the sequence number space.
Select alternative (1, 2 and 3, 1 and 2, 2, 1, none, 1 and 3, 3, 2 and 3)	Several packets can be in flight at the same time.
Select alternative (2, 3, 1, 1, 2 and 3, none, 1 and 2, 2 and 3, 1 and 3)	It is sufficient if the receiving entity has only buffer space for a single packet.
Select alternative (1 and 2, none, 1, 1 and 3, 3, 1, 2 and 3, 2 and 3, 2)	Packets are delivered to the N+1-layer in their sending order.
Select alternative (1 and 3, none, 2 and 3, 1, 2 and 3, 2, 3, 1 and 2, 1)	It is possible to recover from all packet losses without a timeout mechanism.

Select alternative (none, 1, 2 and 3, 2, 1, 2 and 3, 1 and 3, 3, 1 and 2)	It is possible to use cumulative acknowledgements to handle the loss of some acknowledgement packets without retransmissions.
Select alternative (2 and 3, 1 and 3, 1, none, 1 and 2, 2, 3, 1, 2 and 3)	The mechanism is better suited for networks that usually loose 1 packet at a time.
Select alternative (2 and 3, 3, 1, 2, none, 1, 2 and 3, 1 and 2, 1 and 3)	The mechanism is better suited for networks that usually loose several packets at a time.

Maximum marks: 10

14 Net - congestion control

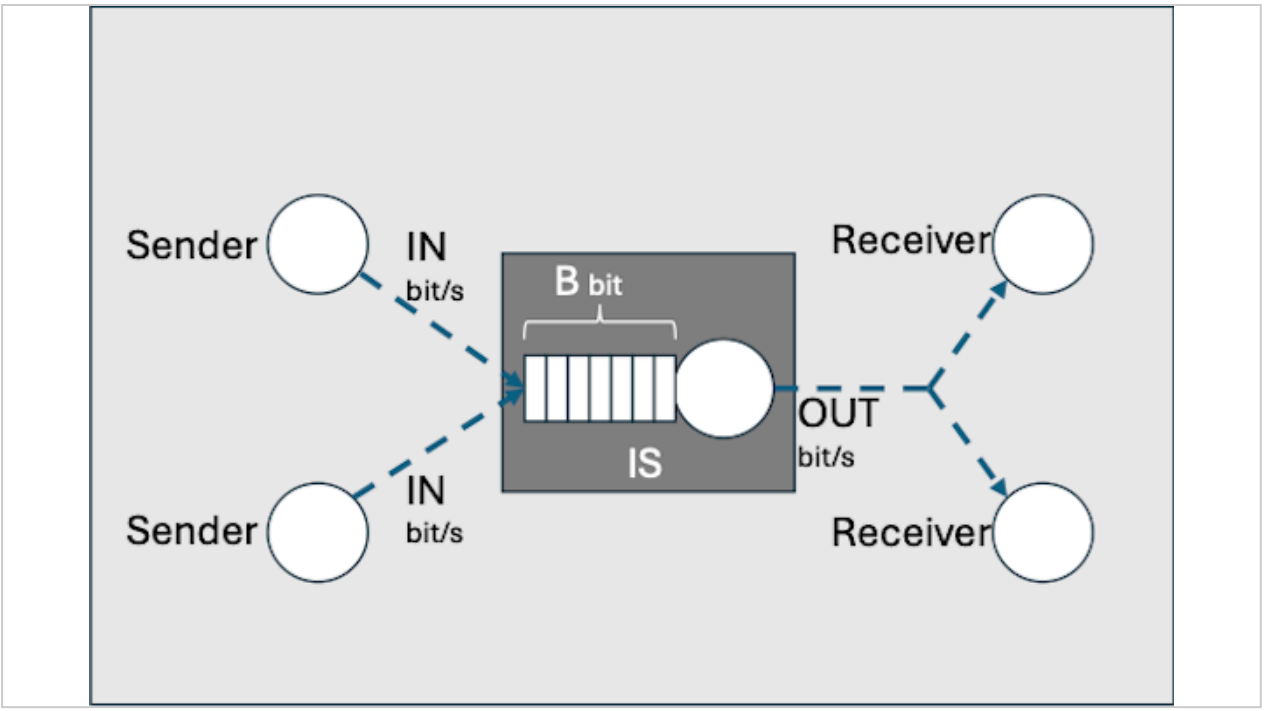

The basic of congestion control can be expressed in some very basic statements. Even though many of the statements consider endless time and infinite buffers, they help us to understand what congestion really is.

Consider the case where two senders send data at a fixed rate to two respective receivers. Each of them sends with a rate IN bit/s. They do not change their sending rate even when packets are lost, and they do not retransmit packets that are lost. They transmit data through an intermediate system (IS) that is the bottleneck. The IS can transmit at most OUT bit/s in the direction of the two receivers. The scenario is shown in the illustration.

Oppgave 1
Assume the following:

- The size of its buffer is infinite.
- The combined rate of the two senders **exceeds** the outgoing line rate of IS (OUT bit/s).

1.1 How many seconds do packets on average spend in IS's buffer?

1.2 At which rate in bit/s do packets (from both senders) leave IS on the outgoing line?

Oppgave 2
Assume the following:

- The many seconds of its buffer is infinite.
- The combined rate of the two senders **does not exceed** the outgoing line rate of IS.

2.1 How long to packets on average spend in IS's buffer?

2.2 At which rate in bit/s do packets (from both senders) leave IS on the outgoing line?

Oppgave 3
Assume the following:

- The size of its buffer is finite. The size of its buffer is B bits.
- The combined rate of the two senders **exceeds** the outgoing line rate of IS (OUT bit/s).

3.1 How many seconds do packets on average spend in IS's buffer?

3.2 At which rate in bit/s do packets (from both senders) leave IS on the outgoing line?

3.3 At which rate in bit/s are packets dropped (i.e. at which rate are packet getting lost)?

Oppgave 4

Assume the following:

- The size of its buffer is finite. The size of its buffer is B bits.
- The combined rate of the two senders **does not exceed** the outgoing line rate of IS (OUT bit/s)

4.1 How many seconds do packets on average spend in IS's buffer?

4.2 At which rate in bit/s do packets (from both senders) leave IS on the outgoing line?

4.3 At which rate in bit/s are packets dropped (i.e. at which rate are packet getting lost)?

	zero	infinite	2*IN	OUT	2*IN-OUT	B/OUT	OUT/B	2*IN/B
1.1	○	○	○	○	○	○	○	○
1.2	○	○	○	○	○	○	○	○
2.1	○	○	○	○	○	○	○	○
2.2	○	○	○	○	○	○	○	○
3.1	○	○	○	○	○	○	○	○
3.2	○	○	○	○	○	○	○	○
3.3	○	○	○	○	○	○	○	○
4.1	○	○	○	○	○	○	○	○
4.2	○	○	○	○	○	○	○	○
4.3	○	○	○	○	○	○	○	○

Maximum marks: 10

15 Net - Routing Multiple Choice

In each of the exercises below, you should select ONE correct answer and insert it into the table at the bottom.

Exercise 1

Which assertion is correct when talking about routing algorithms?

The optimality principle implies that the following is true:

A: If the optimal path from A to C passes B, then B is also on the optimal path from C to A.

B: If the optimal path from A to D passes first B and afterwards C, then B is also on the optimal path from C to D.

C: If the optimal path from A to C passes B, then A is also on the optimal path from B to C.

D: If the optimal path from A to D passes first B and afterwards C, then C is also on the optimal path from B to D.

E: None of the assertions above is correct.

Exercise 2

Which assertion is correct when talking about the Sink Trees?

A: Sink Tree is the algorithm that all routing algorithms use to discover the shortest path to a destination.

B: Sink Tree is an algorithm that computes the optimal distance between all pairs of nodes.

C: Sink Tree is an algorithm that all routing algorithms' performance is compared to in terms of the length of the path they create.

D: Sink Tree is a generalisation of all routing algorithms that exist.

E: None of the assertions above is correct.

Exercise 3

Which assertion is correct when talking about Dijkstra's Shortest Path First Algorithm?

The algorithm visits the nodes of a network ...

A: ... in breadth-first-search order.

B: ... in depth-first-search order.

C: ... in the order of distance from its root node.

D: ... in random order.

E: None of the assertions above is correct.

Exercise 4

Which assertion is correct when talking about Link State Routing (LSR)?

In LSR, every node must ...

A: ... send the distance between them and all other nodes in the network to their direct neighbours.

B: ... send the distance between them and all other nodes in the network to all other node in the network.

C: ... send the distance between them and their direct neighbours to all other node in the network.

D: ... send the distance between them andto their direct neighbours to their direct neighbours.

E: None of the assertions above is correct.

Exercise 5

Which assertion is correct when talking about Distance Vector Routing (DVR)?

In DVR, every node must ...

A: ... send the distance between them and all other nodes in the network to their direct neighbours.

B: ... send the distance between them and all other nodes in the network to all other node in the network.

C: ... send the distance between them and their direct neighbours to all other node in the network.

D: ... send the distance between them andto their direct neighbours to their direct neighbours.

E: None of the assertions above is correct.

	1	2	3	4	5
A	○	○	○	○	○
B	○	○	○	○	○
C	○	○	○	○	○
D	○	○	○	○	○
E	○	○	○	○	○

Maximum marks: 5