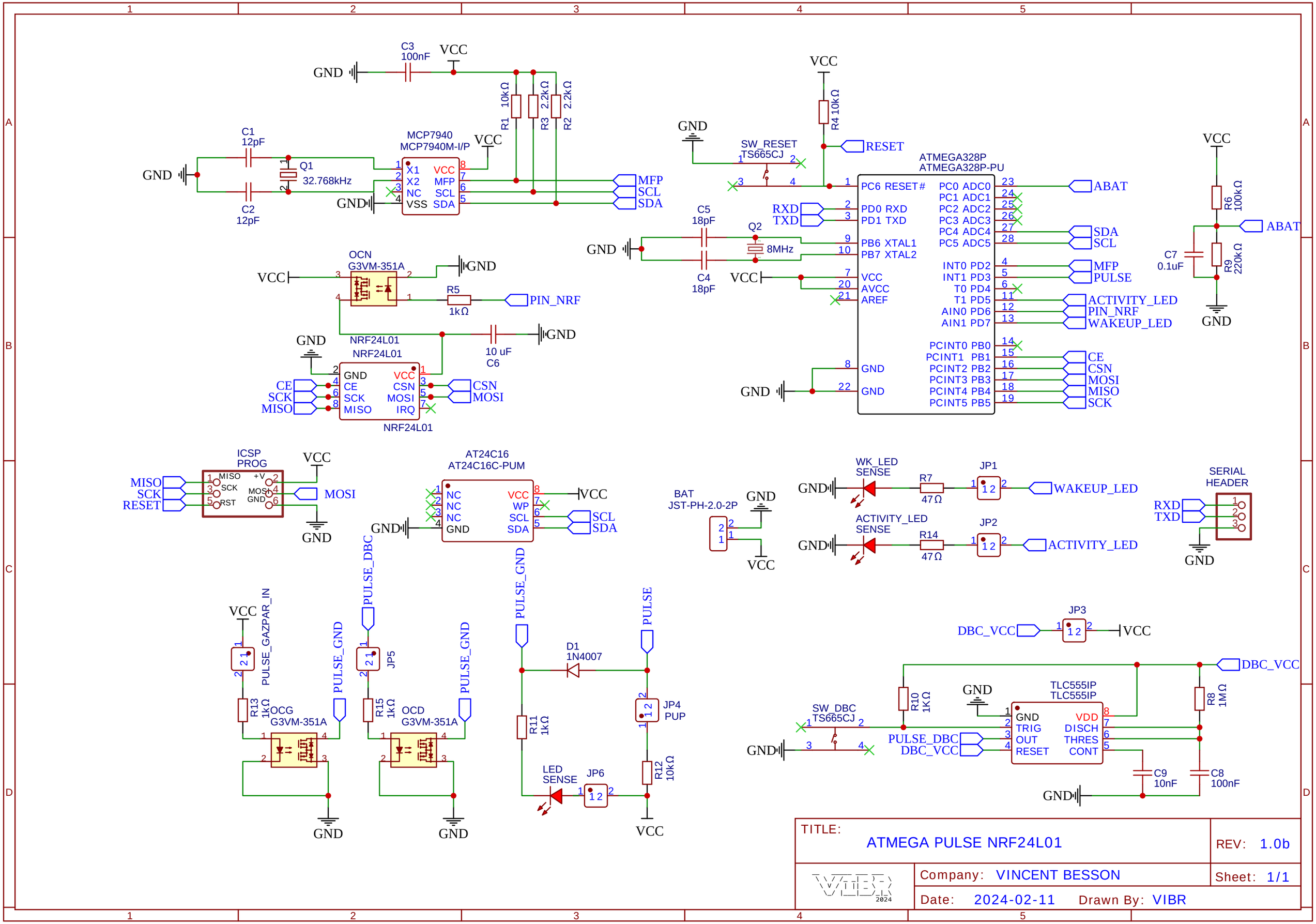
C3
100nF
VCC
GND
R1 10kΩ
R3 2.2kΩ
R2 2.2kΩ
C1
12pF
Q1
32.768kHz
C2
12pF
MCP7940
MCP7940M-I/P
X1
X2
NC
VSS
VCC
MFP
SCL
SDA
MFP
SCL
SDA
SW_RESET
TS665CJ
R4 10kΩ
RESET
ATMEGA328P
ATMEGA328P-PU
PC6 RESET#
PD0 RXD
PD1 TXD
PB6 XTAL1
PB7 XTAL2
VCC
AVCC
AREF
GND
GND
RXD
TXD
C5
18pF
C4
18pF
Q2
8MHz
PC0 ADC0
PC1 ADC1
PC2 ADC2
PC3 ADC3
PC4 ADC4
PC5 ADC5
INT0 PD2
INT1 PD3
T0 PD4
T1 PD5
AIN0 PD6
AIN1 PD7
PCINT0 PB0
PCINT1 PB1
PCINT2 PB2
PCINT3 PB3
PCINT4 PB4
PCINT5 PB5
ABAT
SDA
SCL
MFP
PULSE
ACTIVITY_LED
PIN_NRF
WAKEUP_LED
CE
CSN
MOSI
MISO
SCK
R6 100kΩ
R9 220kΩ
C7
0.1uF
ABAT
OCN
G3VM-351A
R5
1kΩ
PIN_NRF
NRF24L01
10 uF
C6
CE
SCK
MISO
CSN
MOSI
IRQ
ICSP
PROG
MISO
SCK
RST
+V
MOSI
GND
RESET
AT24C16
AT24C16C-PUM
NC
GND
WP
SCL
SDA
BAT
JST-PH-2.0-2P
WK_LED
SENSE
R7
47Ω
JP1
WAKEUP_LED
ACTIVITY_LED
SENSE
R14
47Ω
JP2
ACTIVITY_LED
SERIAL
HEADER
RXD
TXD
PULSE_GAZPAR_IN
PULSE_GND
PULSE_DBC
JP5
PULSE
R13 1kΩ
OCG
G3VM-351A
R15 1kΩ
OCD
G3VM-351A
D1
1N4007
R11 1kΩ
JP4
PUP
R12 10kΩ
LED
SENSE
JP6
JP3
DBC_VCC
SW_DBC
TS665CJ
R10 1KΩ
TLC555IP
GND
TRIG
OUT
RESET
VDD
DISCH
THRES
CONT
R8 1MΩ
C9
10nF
C8
100nF
TITLE:
ATMEGA PULSE NRF24L01
REV: 1.0b
Company: VINCENT BESSON
Sheet: 1/1
Date: 2024-02-11
Drawn By: VIBR