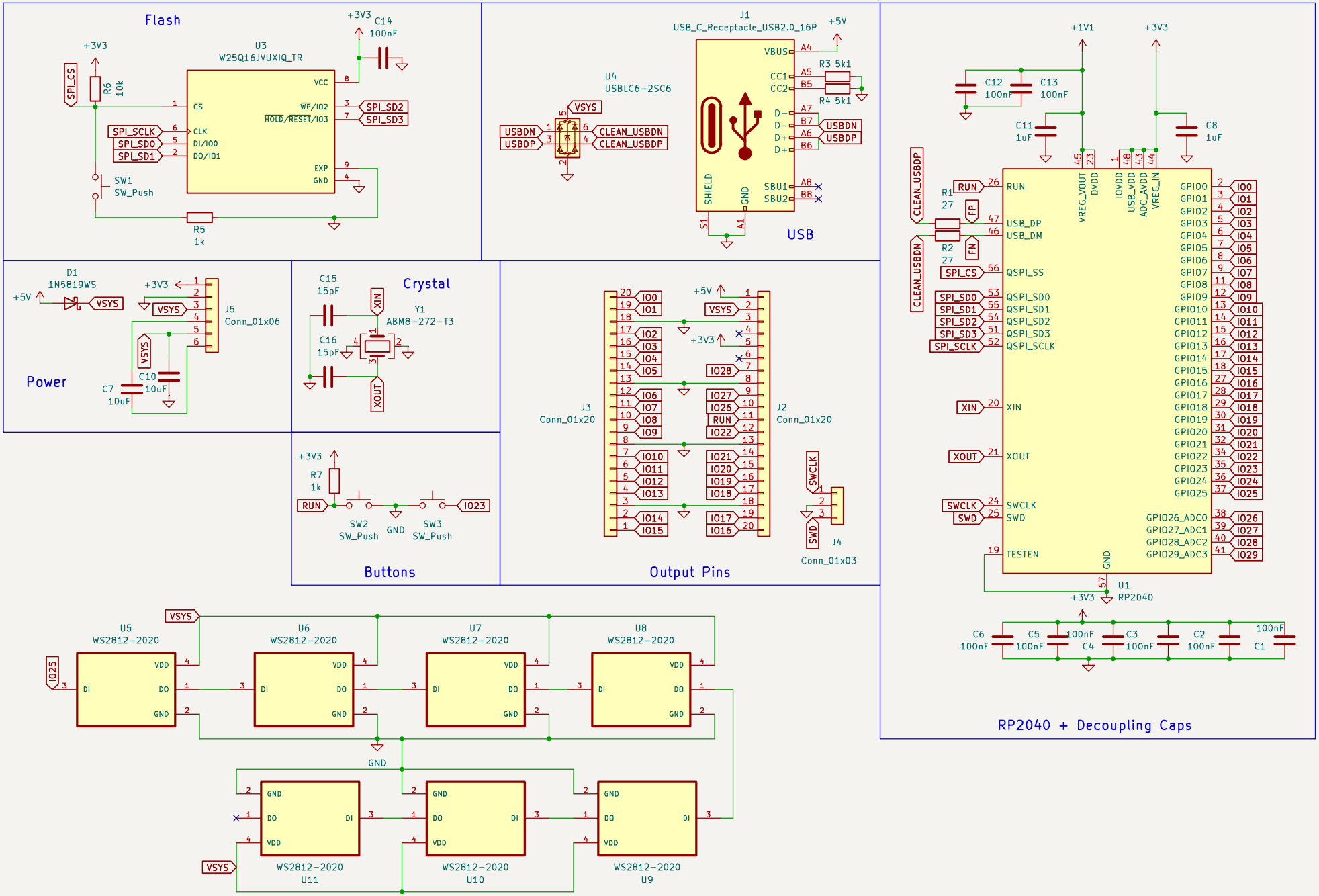
Flash
U3
W25Q16JVUXIQ_TR
+3V3
C14
100nF
SPI_CS
R6
10k
SPI_SCLK
SPI_SD0
SPI_SD1
SPI_SD2
SPI_SD3
SW1
SW_Push
R5
1k
USB
J1
USB_C_Receptacle_USB2.0_16P
+5V
U4
USBLC6-2SC6
VSYS
USBDN
USBDP
CLEAN_USBDN
CLEAN_USBDP
R3 5k1
R4 5k1
Power
D1
1N5819WS
J5
Conn_01x06
C7
10uF
C10
10uF
Crystal
C15
15pF
C16
15pF
Y1
ABM8-272-T3
XIN
XOUT
Buttons
R7
1k
RUN
SW2
SW_Push
SW3
SW_Push
GND
Output Pins
J3
Conn_01x20
J2
Conn_01x20
J4
Conn_01x03
SWCLK
SWD
RP2040 + Decoupling Caps
+1V1
C12
100nF
C13
100nF
C11
1uF
C8
1uF
R1
27
R2
27
U1
RP2040
C6
100nF
C5
100nF
C4
100nF
C3
100nF
C2
100nF
C1
100nF
U5
WS2812-2020
U6
WS2812-2020
U7
WS2812-2020
U8
WS2812-2020
U11
WS2812-2020
U10
WS2812-2020
U9
WS2812-2020