Site to Site VPN Gateway

Connecting on-premises and Azure

Hybrid cloud scenario

Companies might have existing data centers on-premises.

They might also use Azure to deploy part of their workloads.

They will need to connect on-premises to Azure: hybrid cloud.

That is possible through one of:

- Express Route
- VPN Gateway (S2S)
- Express Route as primary and VPN Gateway for failover

VPN Gateway Site to Site

VPN Gateway encrypts traffic between Azure and on-premises.

Can connect multiple sites in different locations.

The encrypted traffic goes over the public Internet.

Suitable when the traffic is likely to be light.

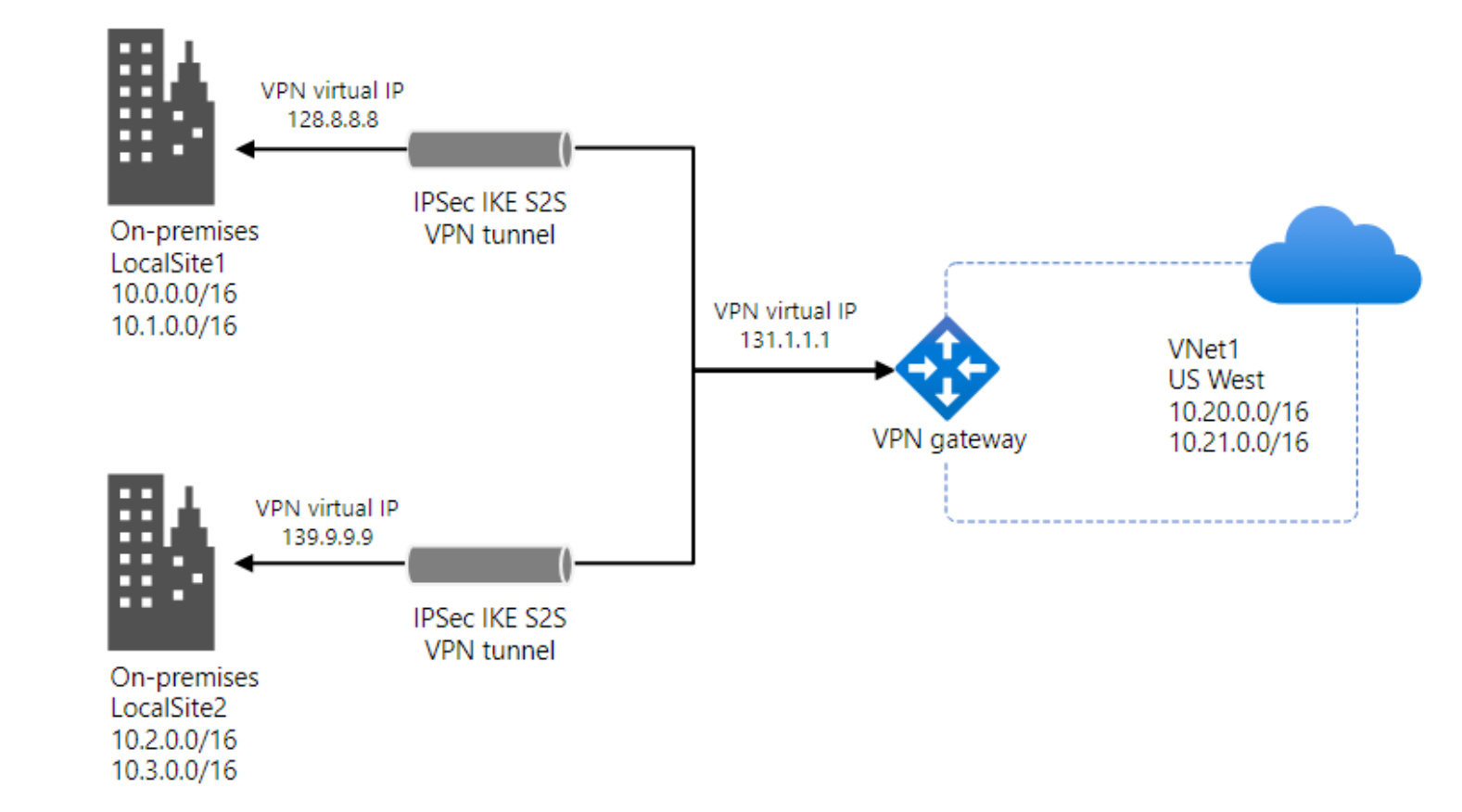

ExpressRoute connection

Uses a private, dedicated connection through a third-party connectivity provider.

The private connection extends your on-premises network into Azure.

Suitable for large-scale, mission-critical workloads that require a high degree of scalability.

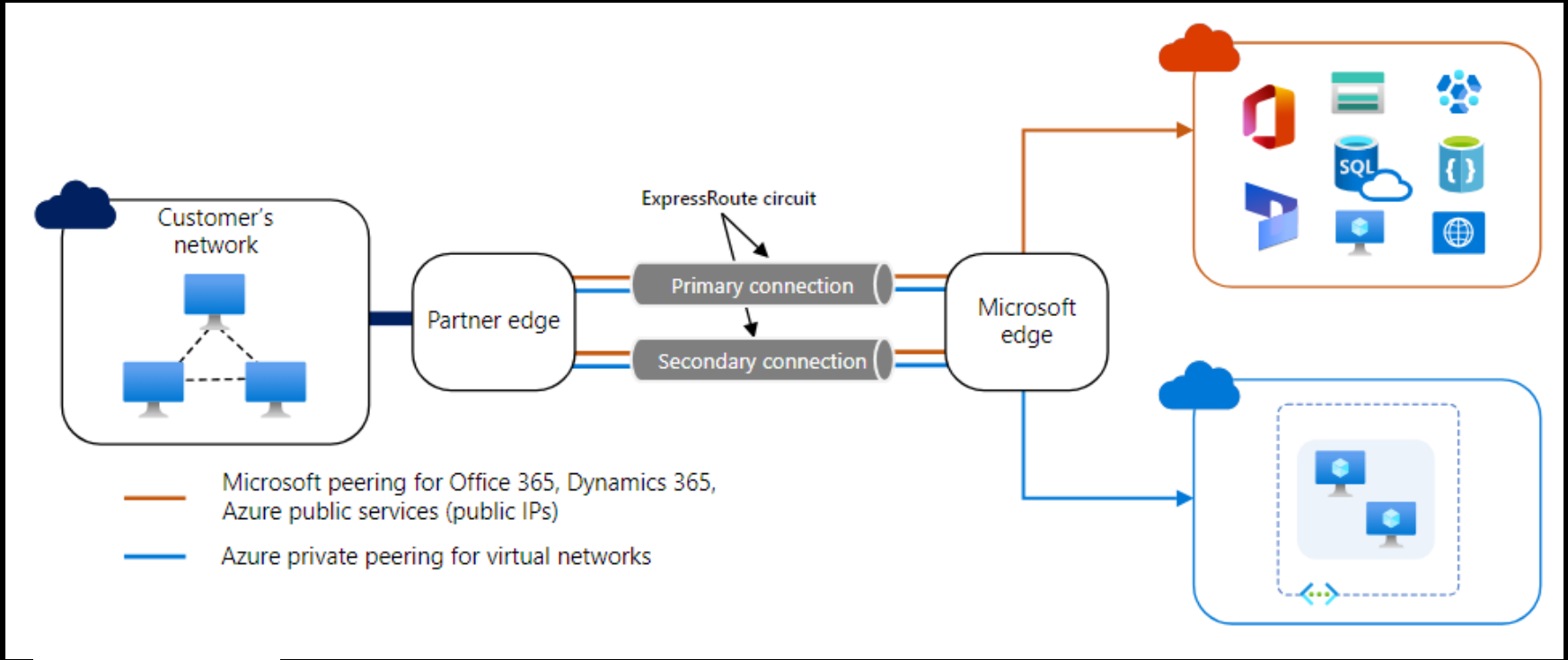

ExpressRoute with VPN failover

Uses ExpressRoute in normal conditions.

Failing over to a VPN connection if there's a loss of connectivity in the ExpressRoute circuit.

Guarantees high availability for the connectivity.

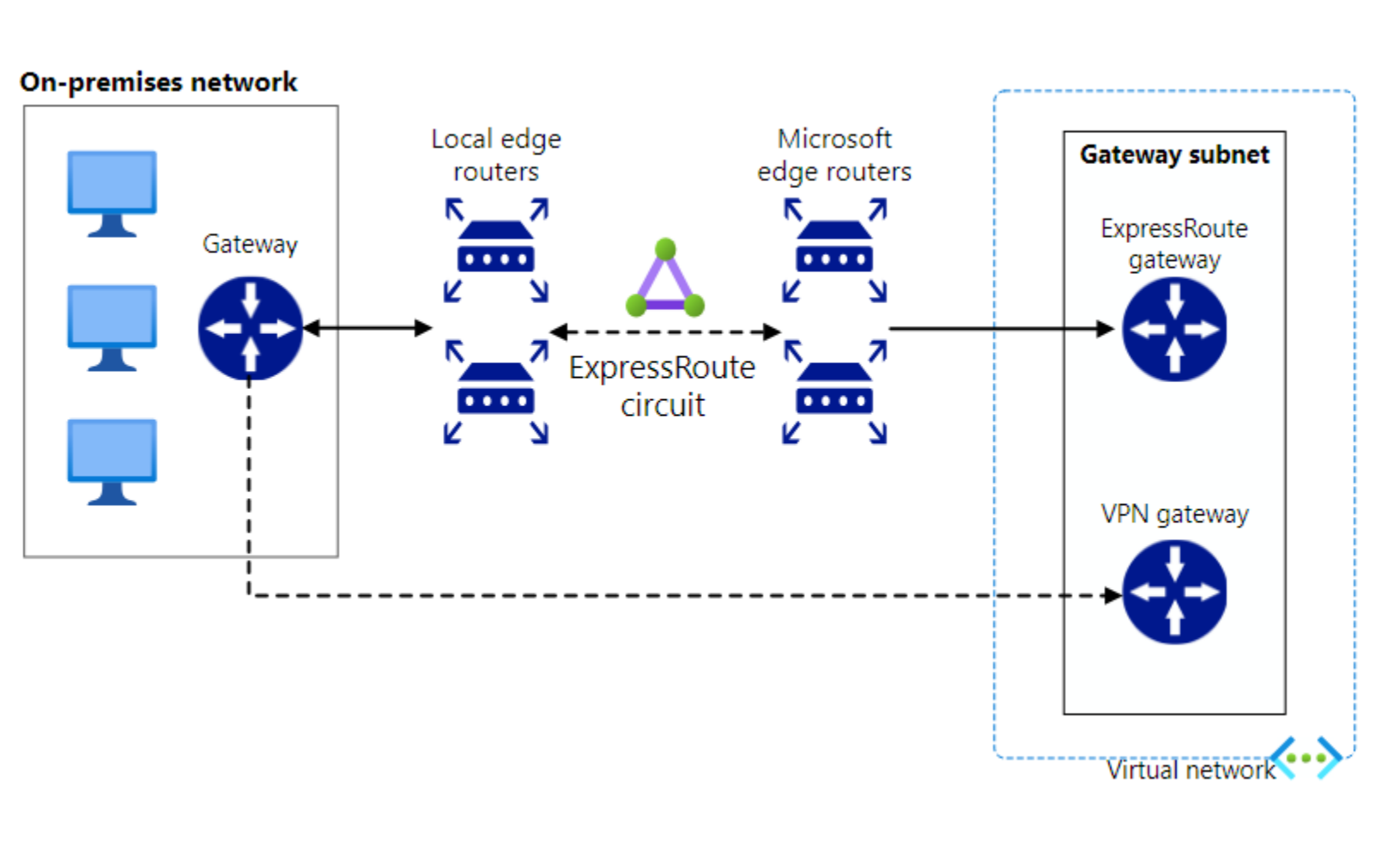

VPN Gateway S2S demo

Connect on-premises data center to Azure.

On-premises will be simulated with an Azure VNET.

Connectivity requires:

- Local Network Gateway
- Connection
- VPN Gateway

Name	Type
hub-to-onprem	Connection
lng-hub	Local network gateway
nic-vm-hub	Network Interface
os-disk-vm-hub	Disk
pip-vpngateway-hub	Public IP address
vm-linux-hub	Virtual machine
vnet-hub	Virtual network
vpngateway-hub	Virtual network gateway

github.com/HoussemDellai/azure-network-course/tree/main/820_vpn_gateway_s2s