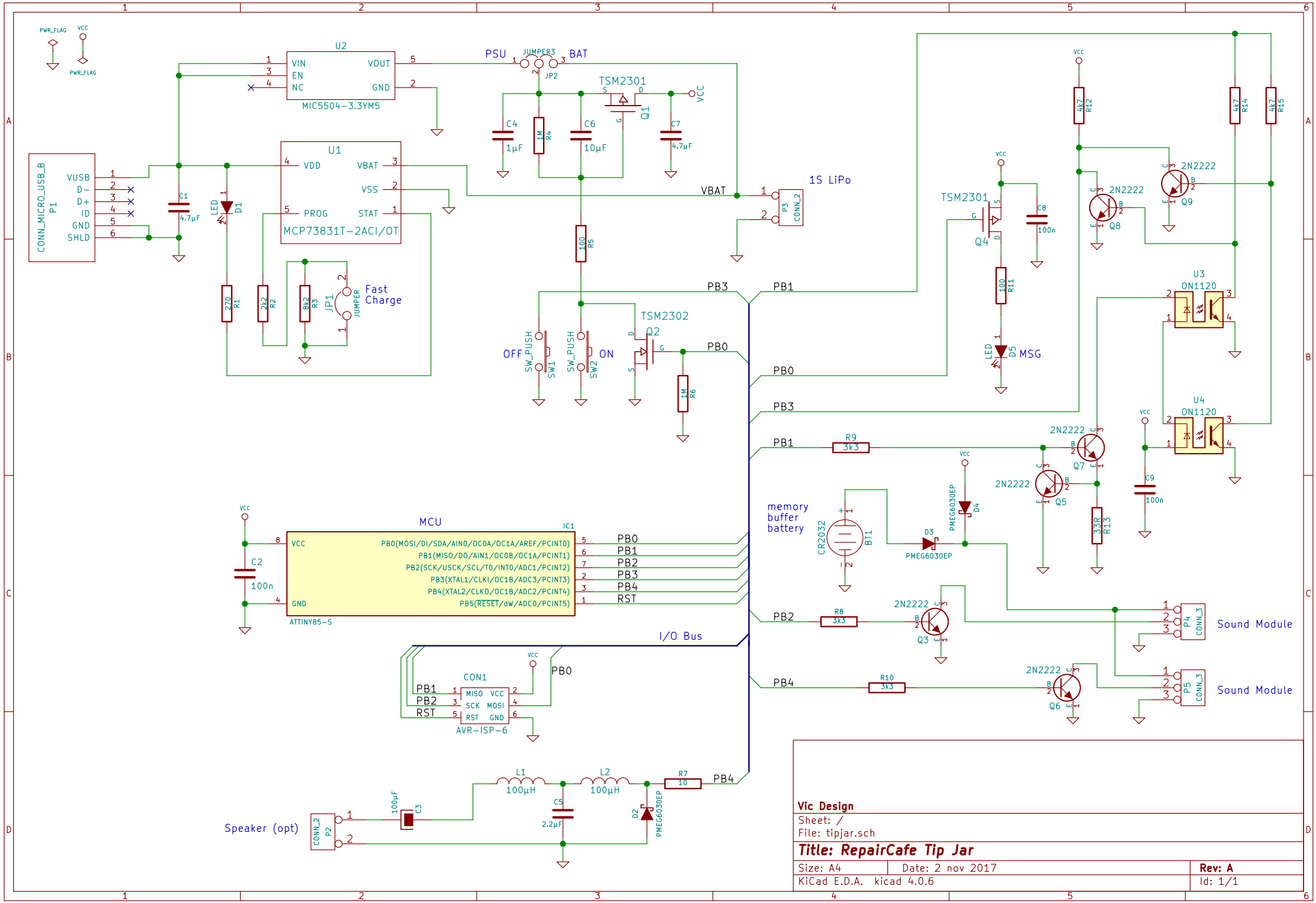

Vic Design

Sheet: /

File: tipjar.sch

Title: RepairCafe Tip Jar

Size: A4	Date: 2 nov 2017	Rev: A
KiCad E.D.A. kicad 4.0.6		Id: 1/1