POWER OPTION 1(DC JACK)

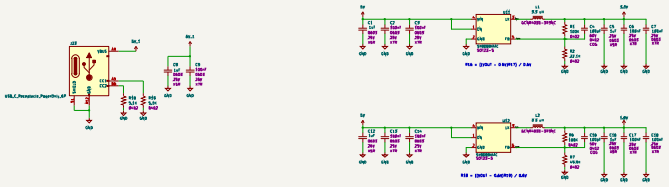

POWER OPTION 2(VAAMAN HEADER)

SWITCHING BETWEEN THE POWER SOURCES

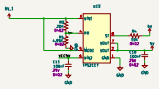

UART GROUP A

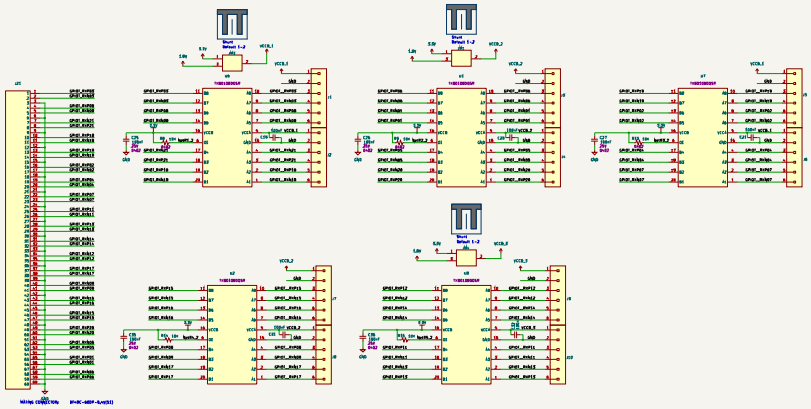

UART GROUP B

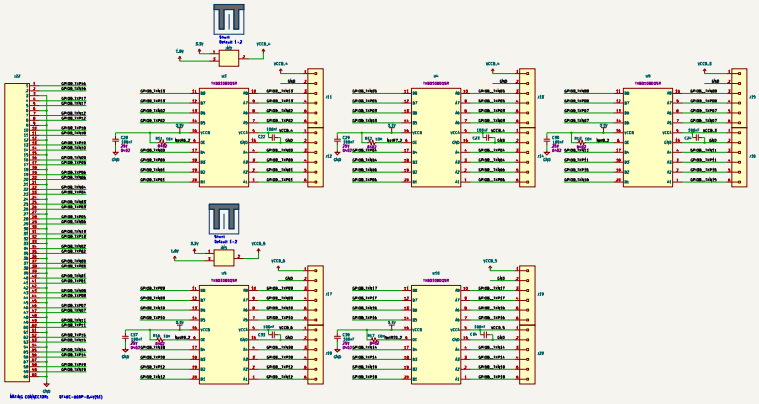

Sheet /
File: EPG HAT 2Uface.sch
Title: VICHAAAK
Size: A1 | Date: 2021-08-18 | Rev: 1.2
KiCad E.D.A. 6.0.1 | Id: 1/1