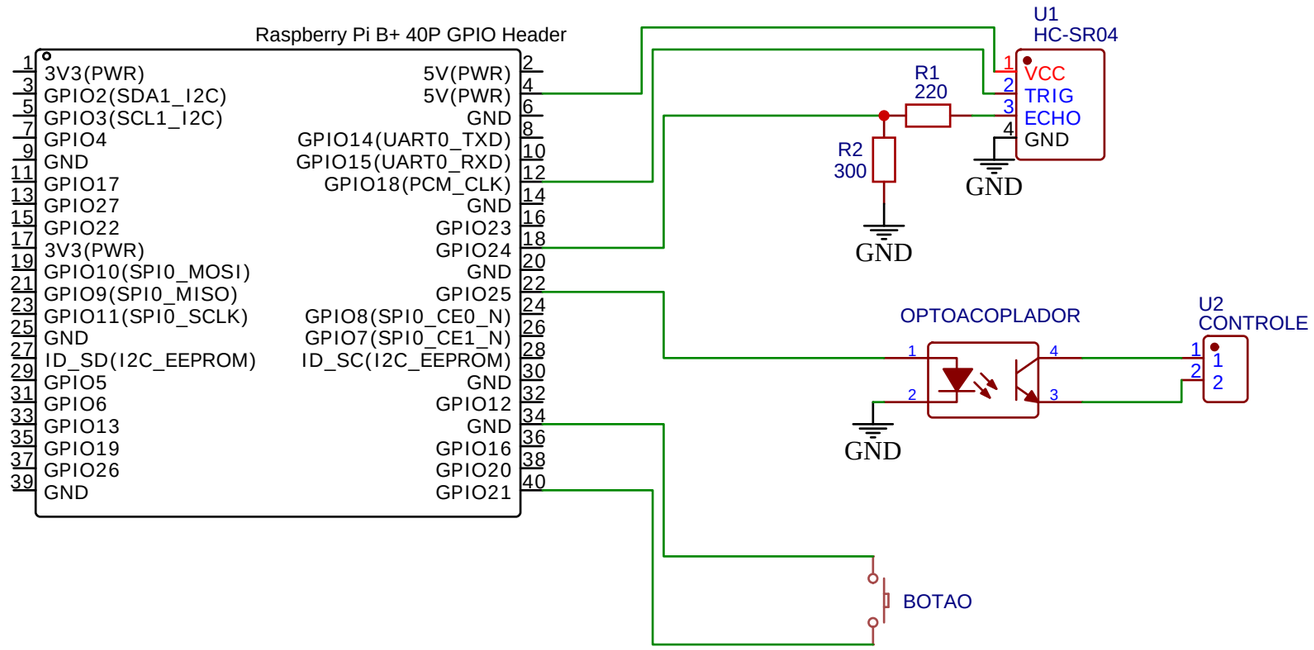

TITLE: Controle de Acesso veicular		REV: 1.0
EasyEDA	Company: Grupo 0	Sheet: 1/1
	Date: 2025-02-07 Drawn By: yuri161258	