Positive-Voltage Regulator

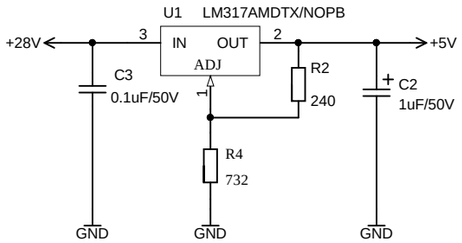

Negative Voltage Regulator

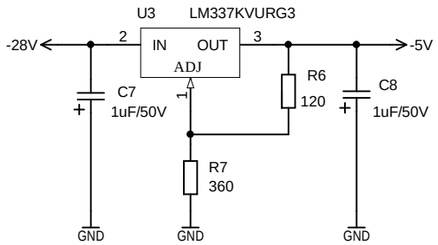

Converter 220VAC to 28VAC

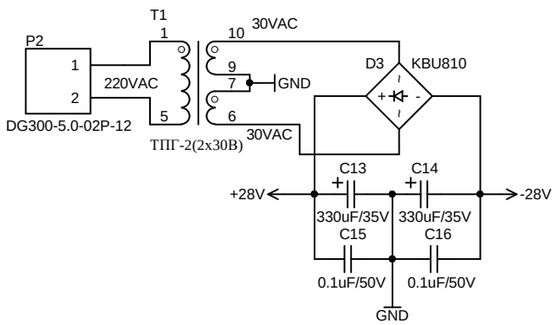

Sin wave oscillator

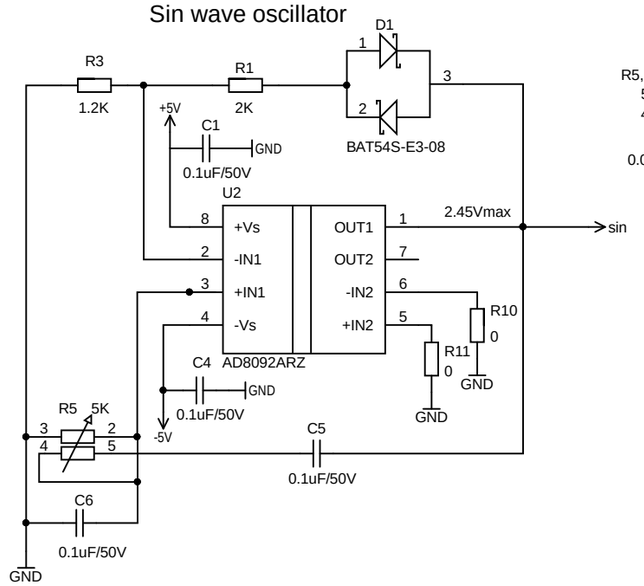

R5, kOhm	F, kHz
5	0.32
4	0.4
0.001	1390

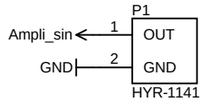

Amplifier 2.45V - 28V

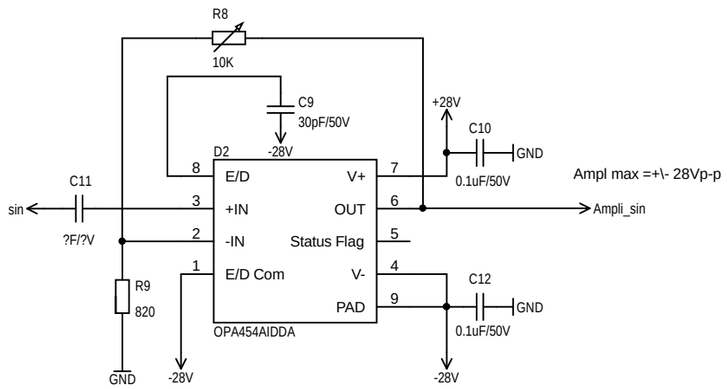

Title **SWG**			
PCBA Number:		Revision:	
PCB Number:		Revision:	
Drawn by:		Date:	Description:
Checked by:		Date:	
Print Date: 04.06.2020	Sheet * of *	Size: A3	