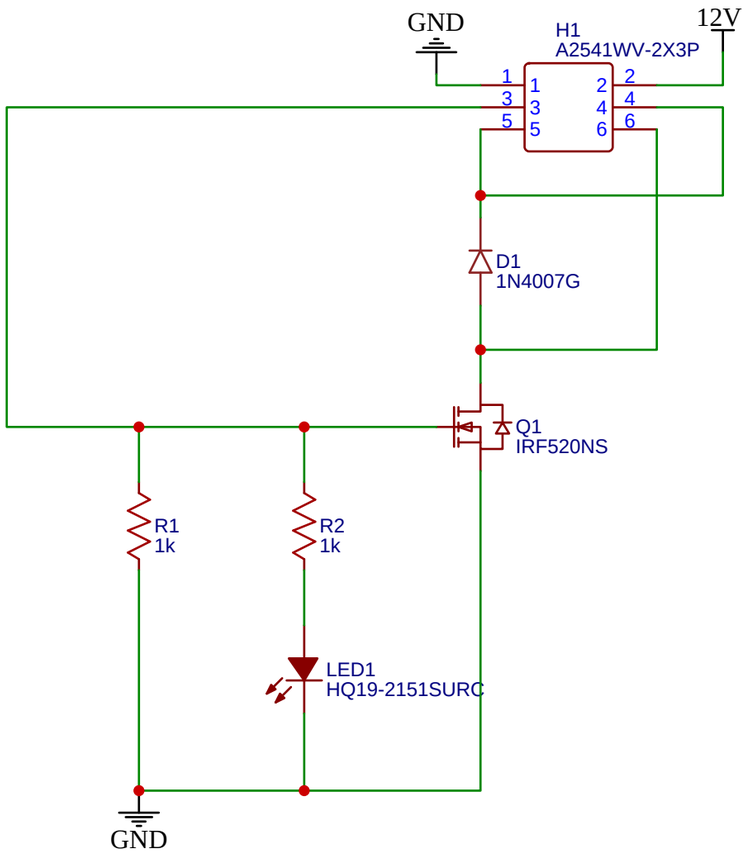

TITLE: Seedup Relay		REV: 1.0
EasyEDA	Company: Seedup	Sheet: 1/1
	Date: 2020-10-29 Drawn By: Victor Halla	