Power Decoupling

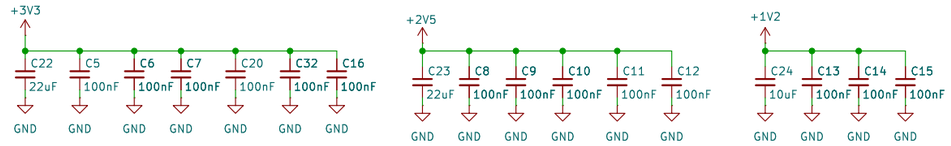

SOC

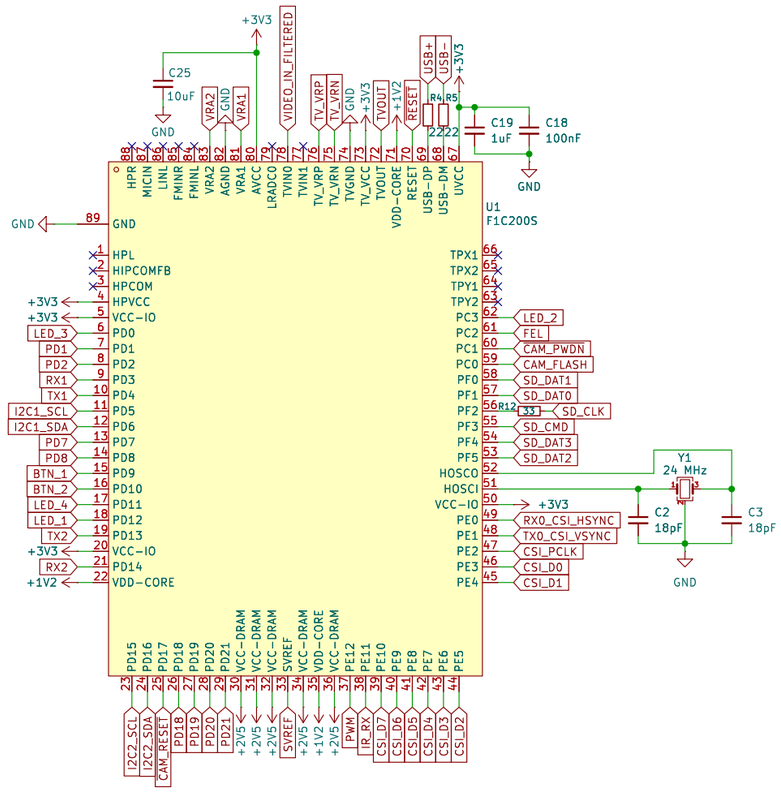

USB

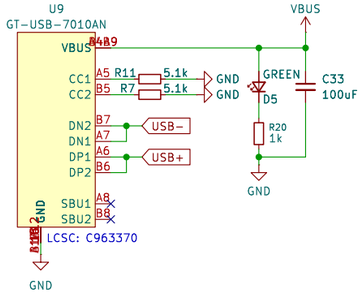

POWER

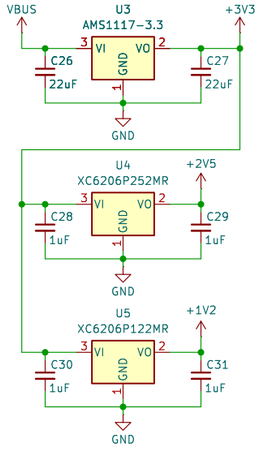

Pull-Ups

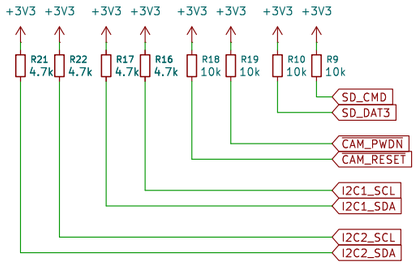

Filters & Voltage divider

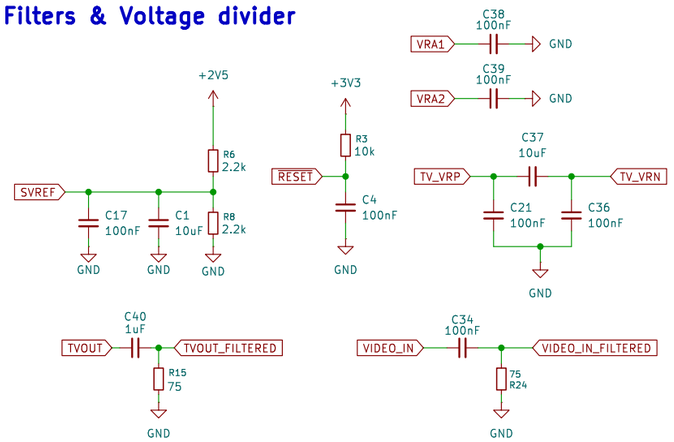

LEDs

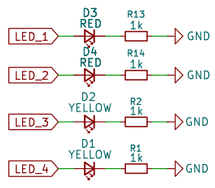

Buttons

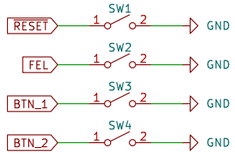

SD CARD

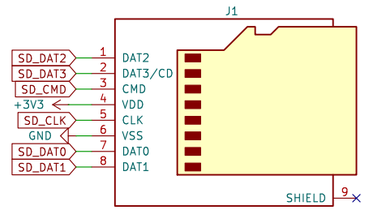

Connectors

Camera Breakout Connector

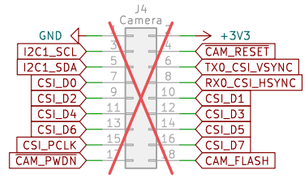

2x16-pin 2.54mm headers

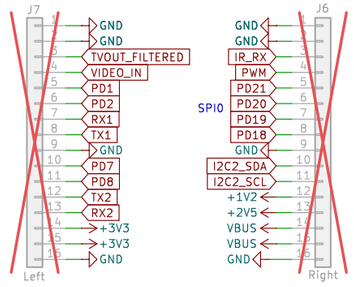

1x2-pin 2.54mm power headers

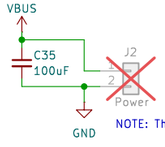

NOTE: This is directly connected to USB!

Victor Krook

Sheet: /

File: rev-a.kicad_sch

Title: F1C200S Dev board

Size: A3	Date: 2026-04-11	Rev: A
KiCad E.D.A. 9.0.8		Id: 1/1