MCU

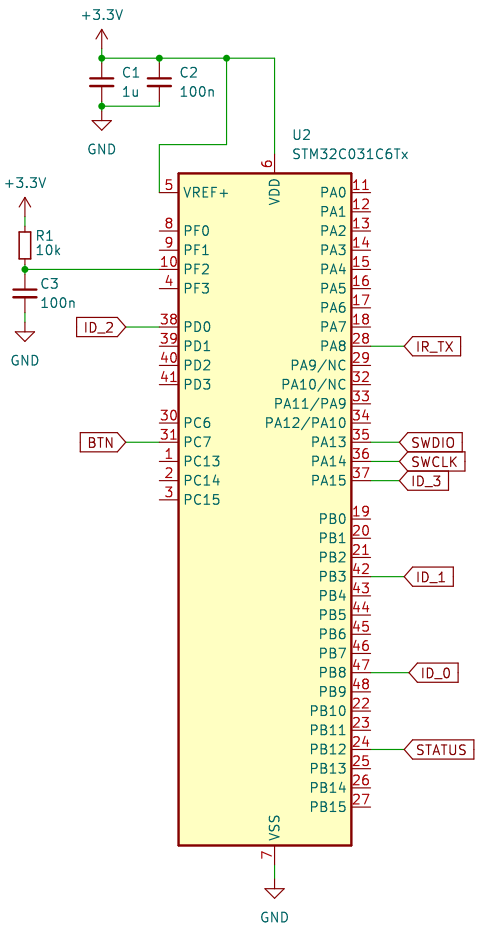

LEDs

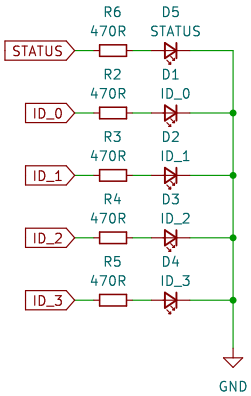

I/O

Input voltage: 1s, 3.7–4.2V,
from 4s balance plug connector.
This allows 1–4s balance plugs

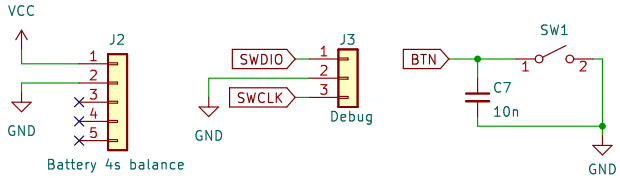

IR TX

VCC is about 3.7–4.2V
IR forward voltage 1.3–1.7V, current: 600 mA

Voltage across resistor is max: 4.2V – 1.3V = 2.9V
Max current through IR: 2.9V / 5.1R = 0.57A

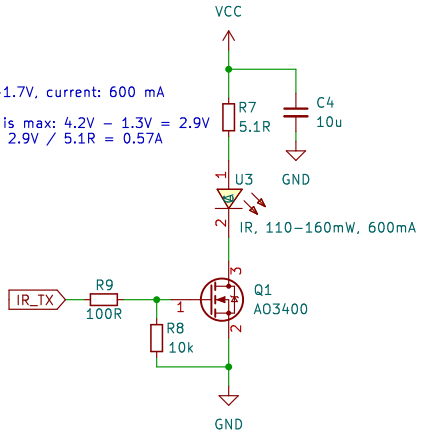

Power

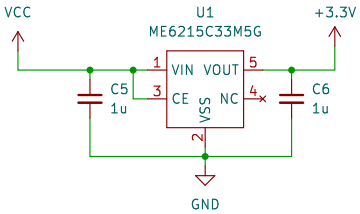

AeroMender

Sheet: /
File: aeromendtag.kicad_sch

Title: aeromendtag

Size: A4	Date: 2023-10-13	**Rev: A**
KiCad E.D.A. kicad 7.0.8		Id: 1/1