USB Type C with ESD Protection

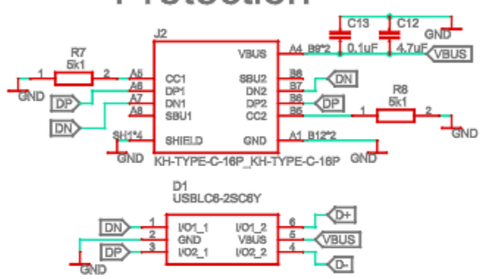

LiPo Charger

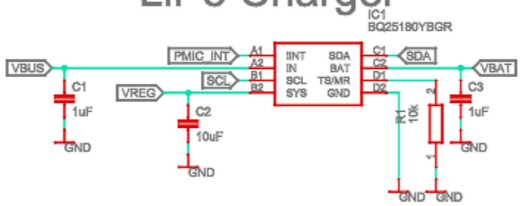

DC/DC

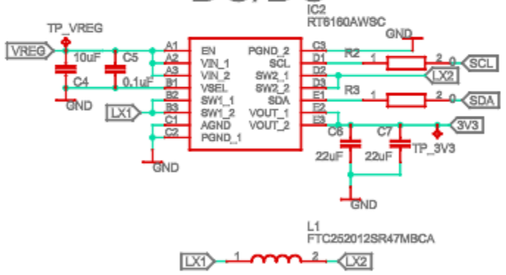

Buttons

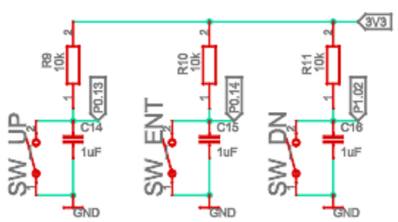

MCU

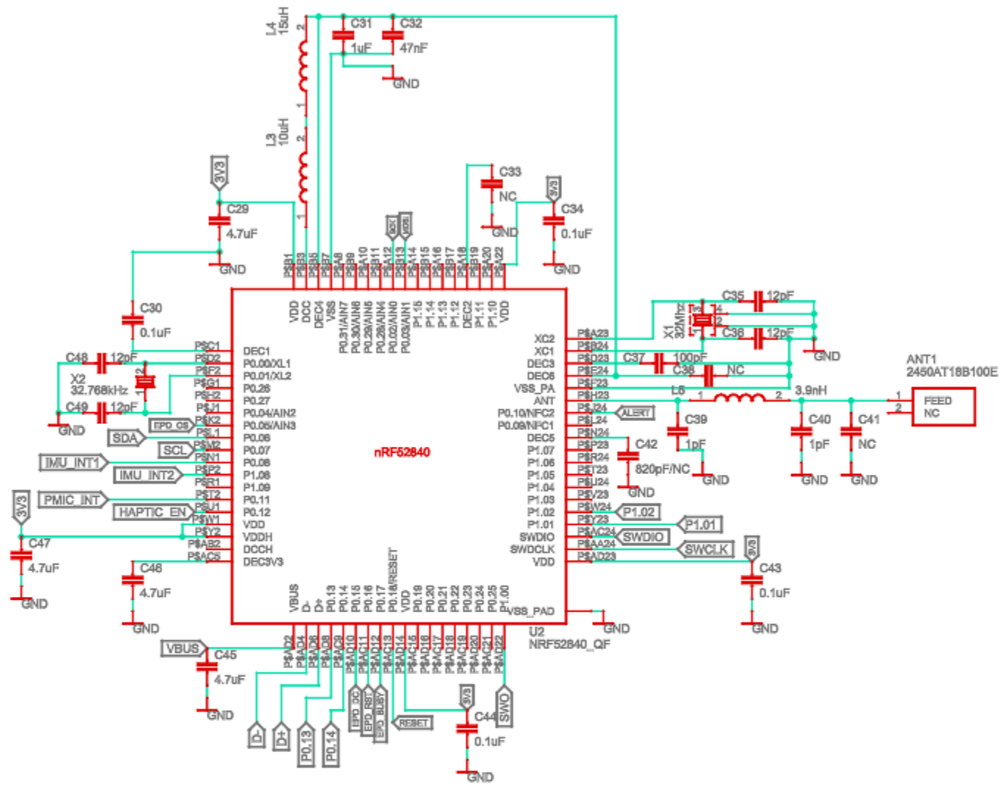

I2c Pullups

IMU

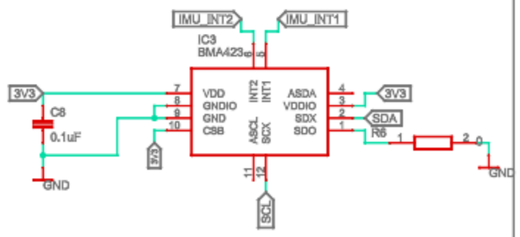

SWD

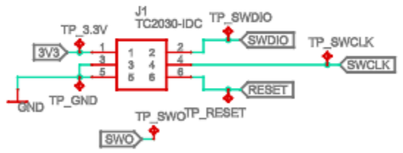

Fuel Gauge

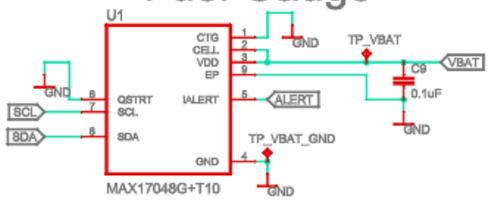

E-Paper Drive Circuit

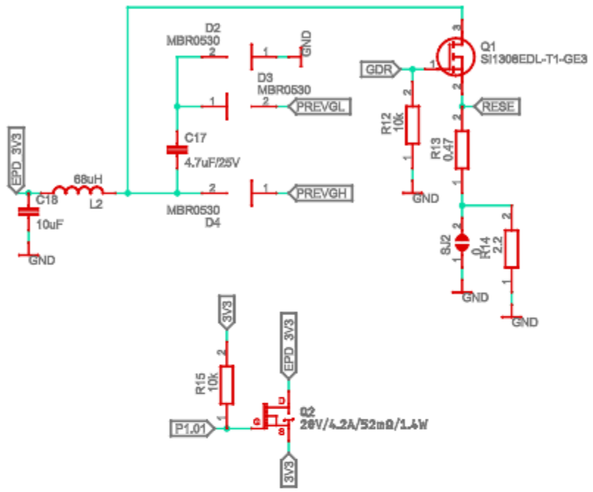

E-Paper Display Connector

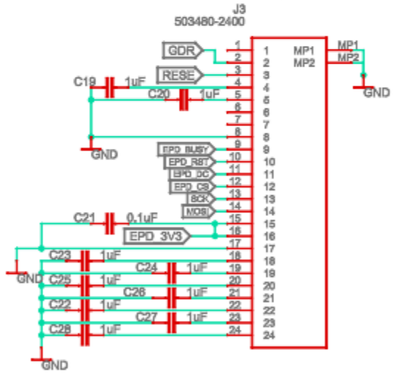
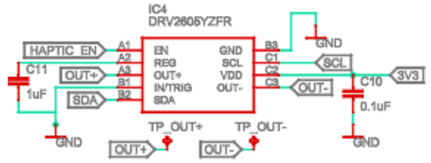
Haptic Driver