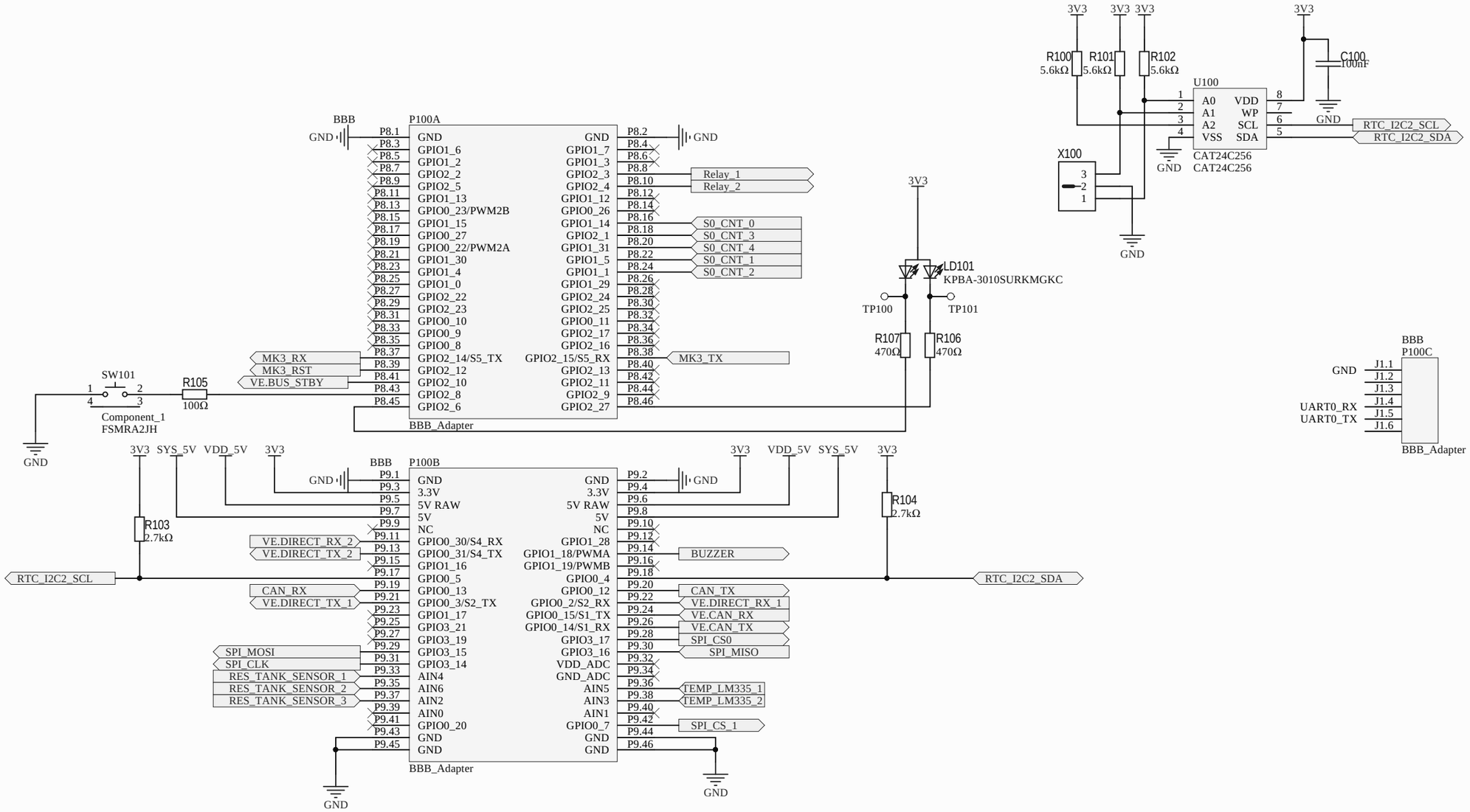

Victron Energy B.V.
De Paal 35, 1351 JG
Almere-Haven The Netherlands
Tel.: +31 (0)36 535 9700

Project: VE BBB Cape.PrjPcb		Desc: Top Level.SchDoc	
Designed by: *	Date: *	Sheet 1 of 5	SVN Rev: Not in version control PCB V.0.4 Size A3

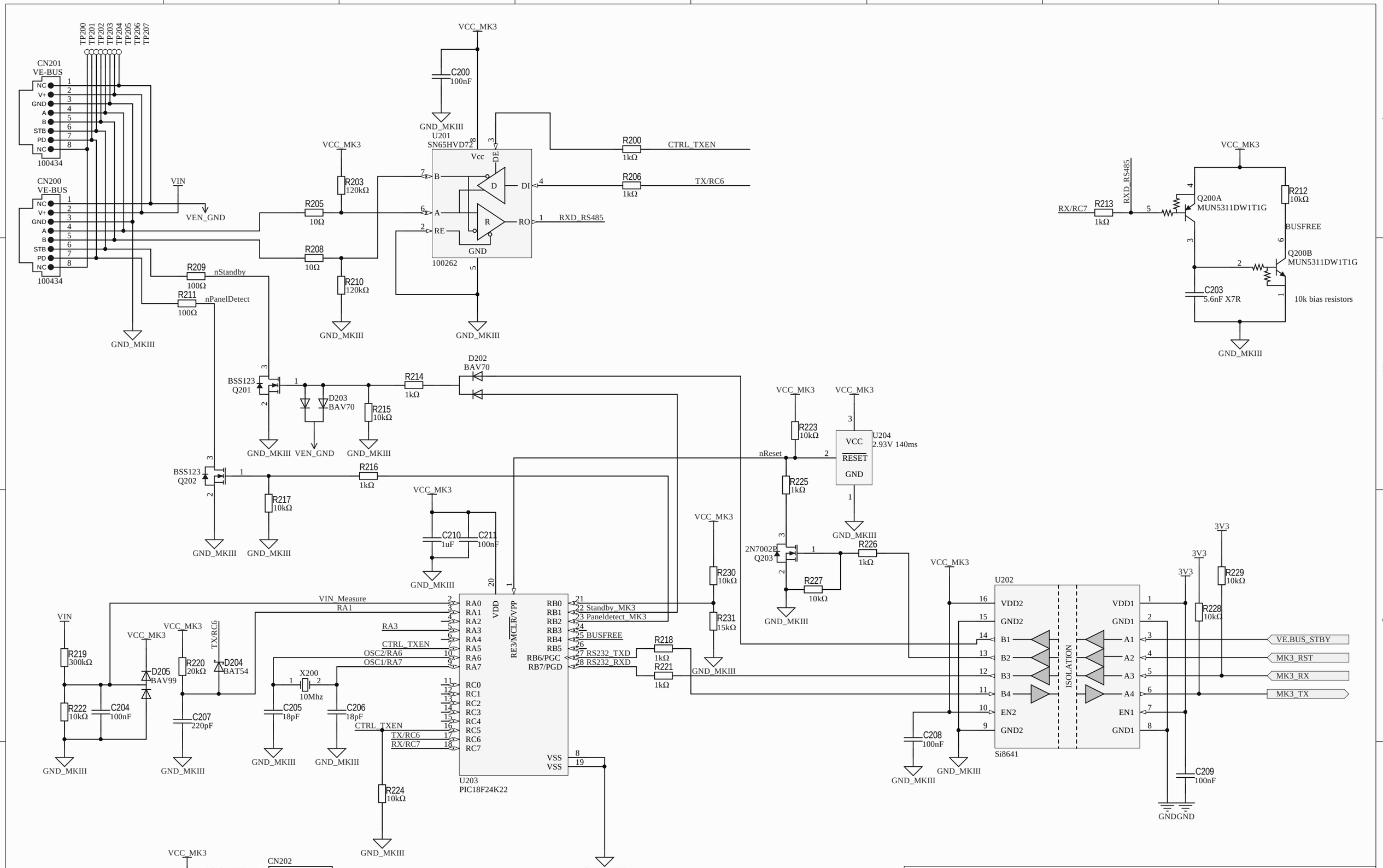

Victron Energy B.V.
De Paal 35, 1351 JG
Almere-Haven The Netherlands
Tel.: +31 (0)36 535 9700

Project: VE BBB Cape.PrjPcb		Desc: MKIII.SchDoc	
Designed by: Thijs Oosterbaan	ModDate: 15-9-2016	Sheet 2 of 5	SVN Rev: Not in version control PCB V.0.4 Size A3

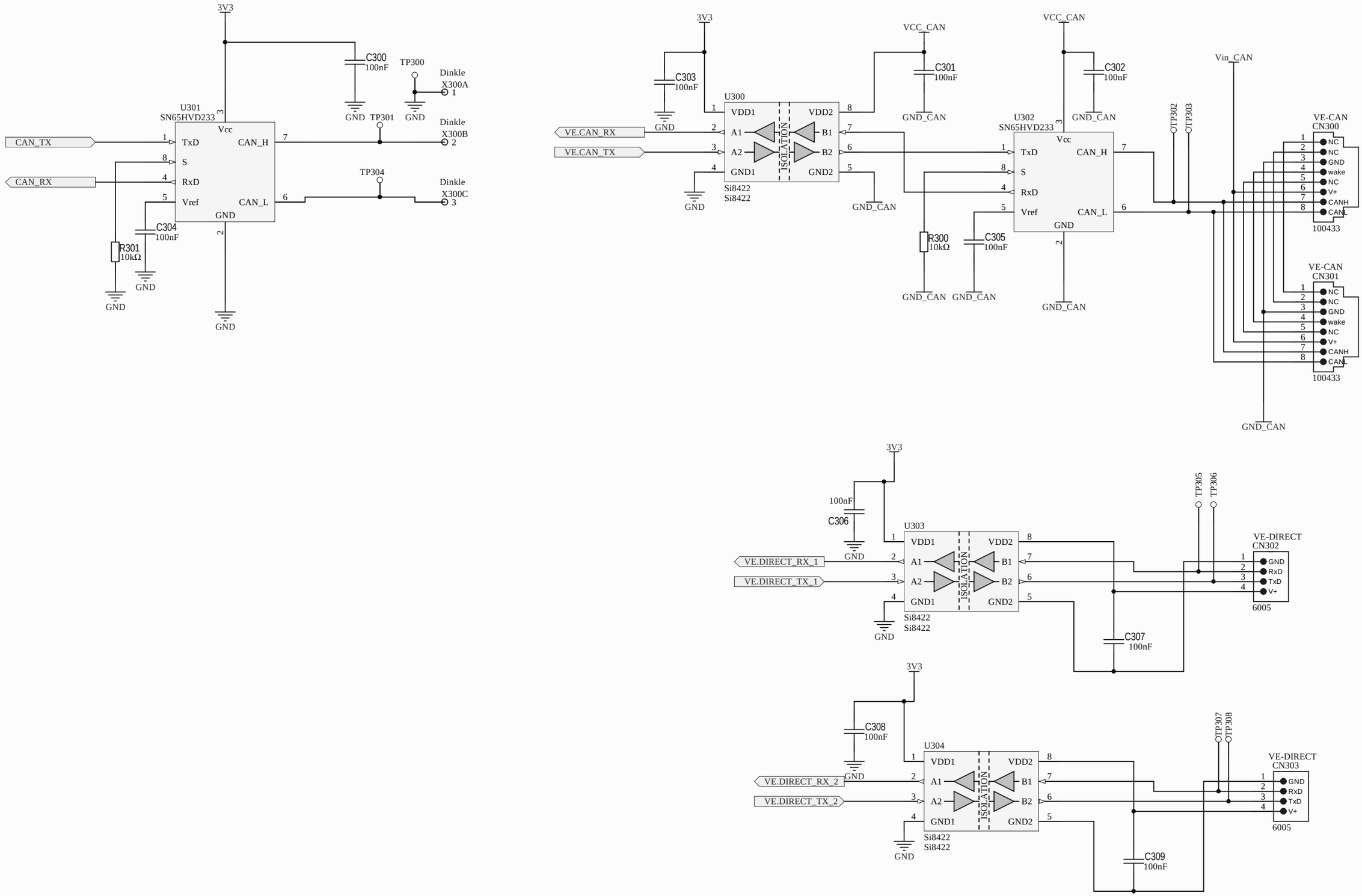

Victron Energy B.V.
De Paal 35, 1351 JG
Almere-Haven The Netherlands
Tel.: +31 (0)36 535 9700

Project: VE BBB Cape.PrjPcb		Desc: CAN and VE.Direct.SchDoc	
Designed by: *	Date: *	Sheet 3 of 5	SVN Rev: Not in version control PCB V.0.4 Size A3

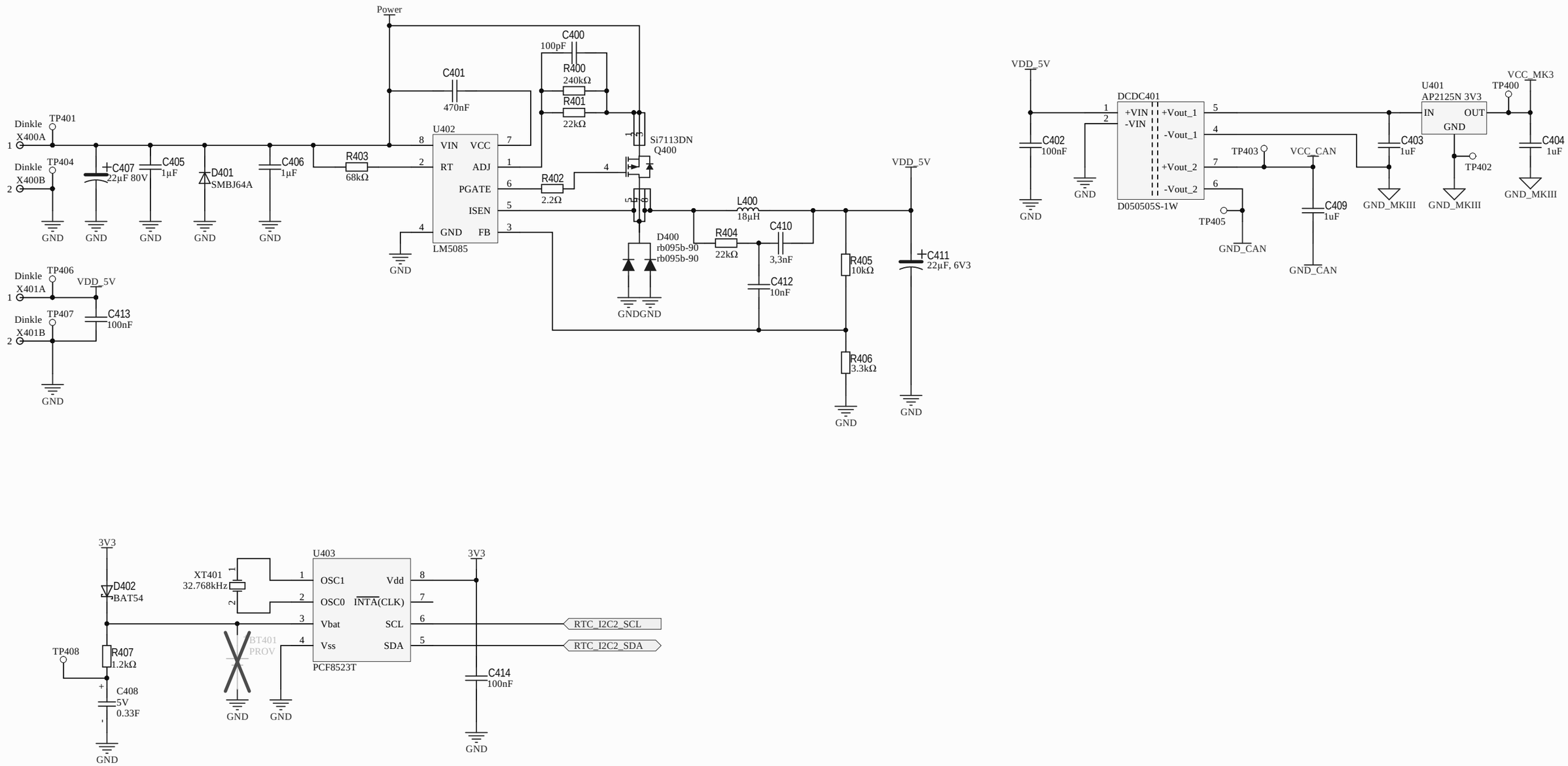

Victron Energy B.V.
De Paal 35, 1351 JG
Almere-Haven The Netherlands
Tel.: +31 (0)36 535 9700

victron energy
BLUE POWER

Project: VE BBB Cape.PrjPcb		Desc: PSU + RTC.SchDoc	
Designed by: *	Date: *	Sheet 4 of 5	SVN Rev: Not in version control PCB V.0.4 Size A3

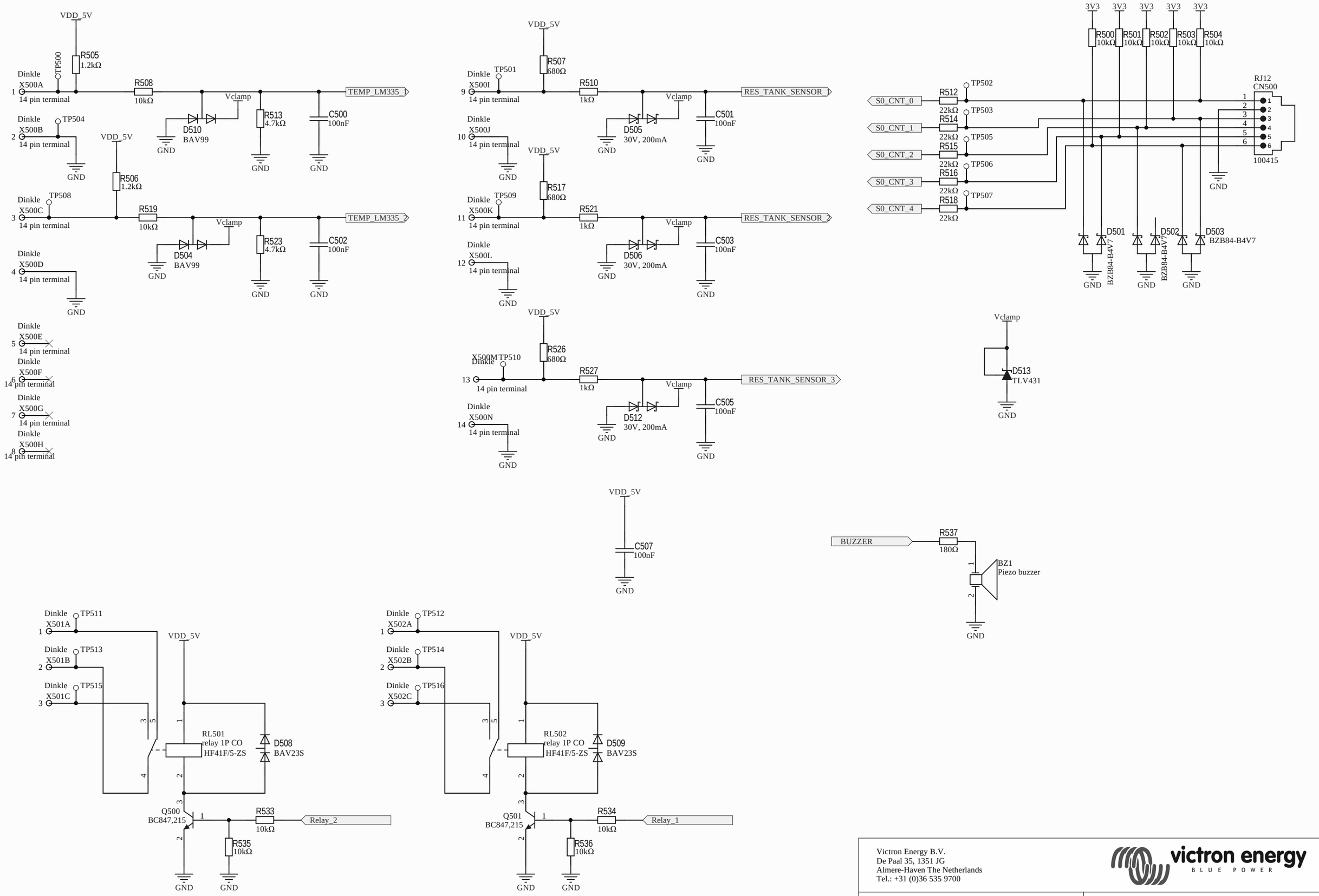

Victron Energy B.V.
De Paal 35, 1351 JG
Almere-Haven The Netherlands
Tel.: +31 (0)36 535 9700

Project: VE BBB Cape.PrjPcb		Desc: Sensor inputs.SchDoc	
Designed by: *	Date: *	Sheet 5 of 5	SVN Rev: Not in version control PCB V.0.4 Size A3

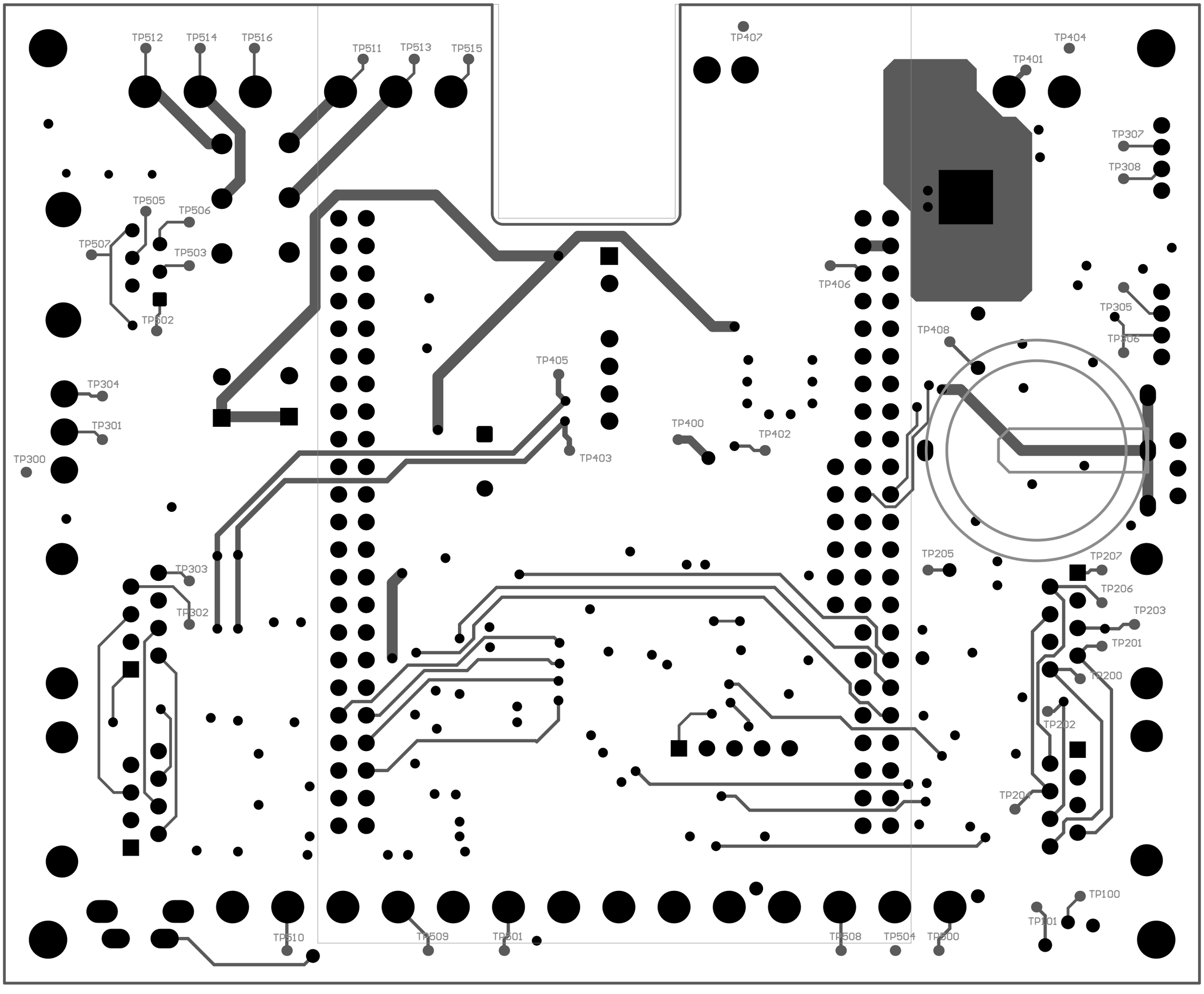
TP512
TP514
TP516
TP511
TP513
TP515
TP407
TP404
TP401
TP307
TP308
TP505
TP506
TP507
TP503
TP502
TP406
TP305
TP306
TP408
TP405
TP304
TP301
TP300
TP400
TP402
TP403
TP205
TP207
TP303
TP206
TP302
TP203
TP201
TP200
TP202
TP204
TP100
TP101
TP510
TP509
TP501
TP508
TP504
TP500

TOO_BBB_CAPE
PCB V0.4
BZ1
CN303
CN302
CN201
CN202
CN200
CN300
CN301
CN500
X400
X401
X501
X502
X300
X500
X100
D400
U304
U303
U403
U401
U402
U301
U300
U302
U201
U202
U204
Q200
Q202
Q203
Q500
Q501
DCDC401
L400
Q400
P100
RL501
RL502
XT401
BT401
SW101
V?