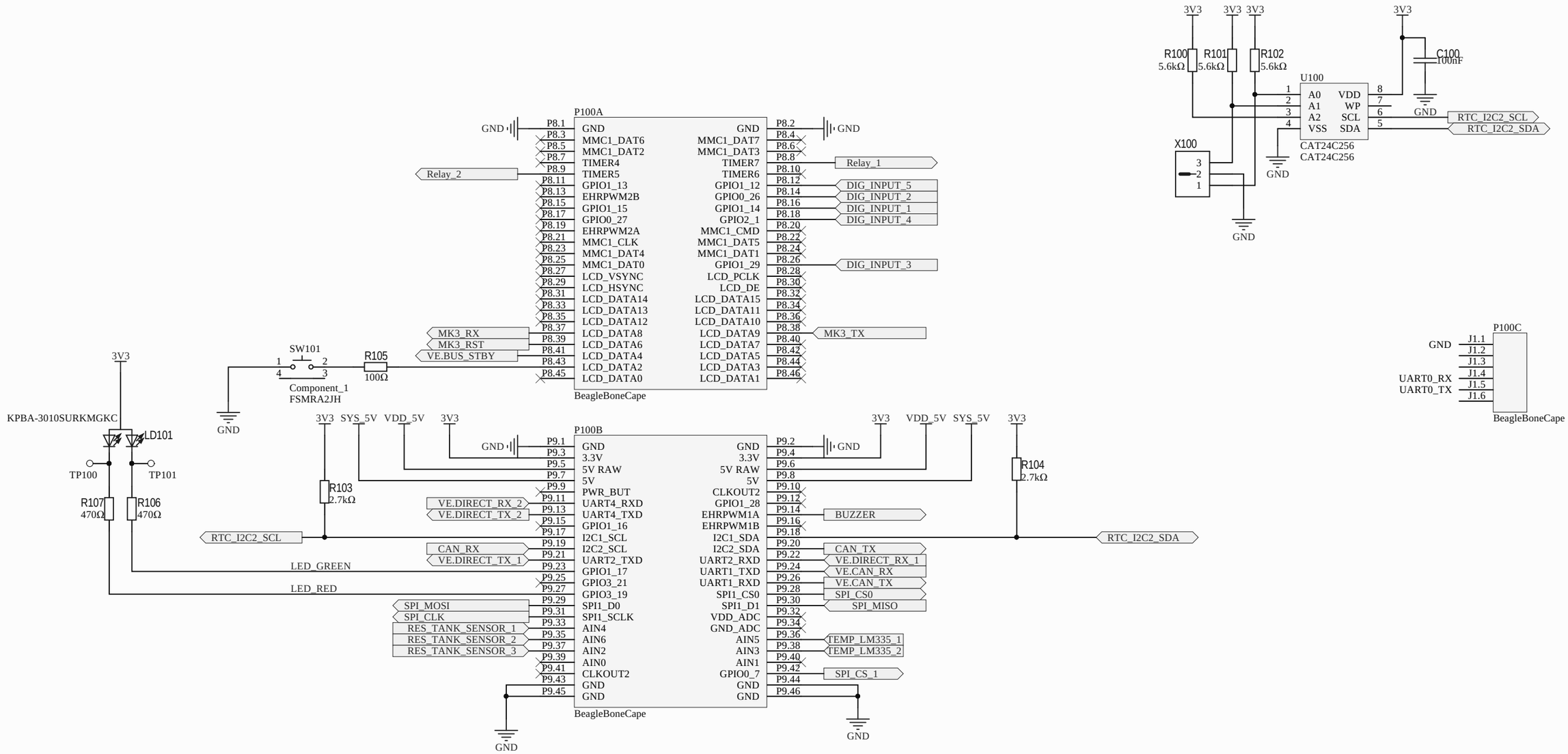

Victron Energy B.V.
De Paal 35, 1351 JG
Almere-Haven The Netherlands
Tel.: +31 (0)36 535 9700

Project: VE BBB Cape.PrjPcb		Desc: Top Level.SchDoc		
Designed by: *	Date: *	Sheet 1 of 5	SVN Rev: 34 PCB V.0.62	Size A3

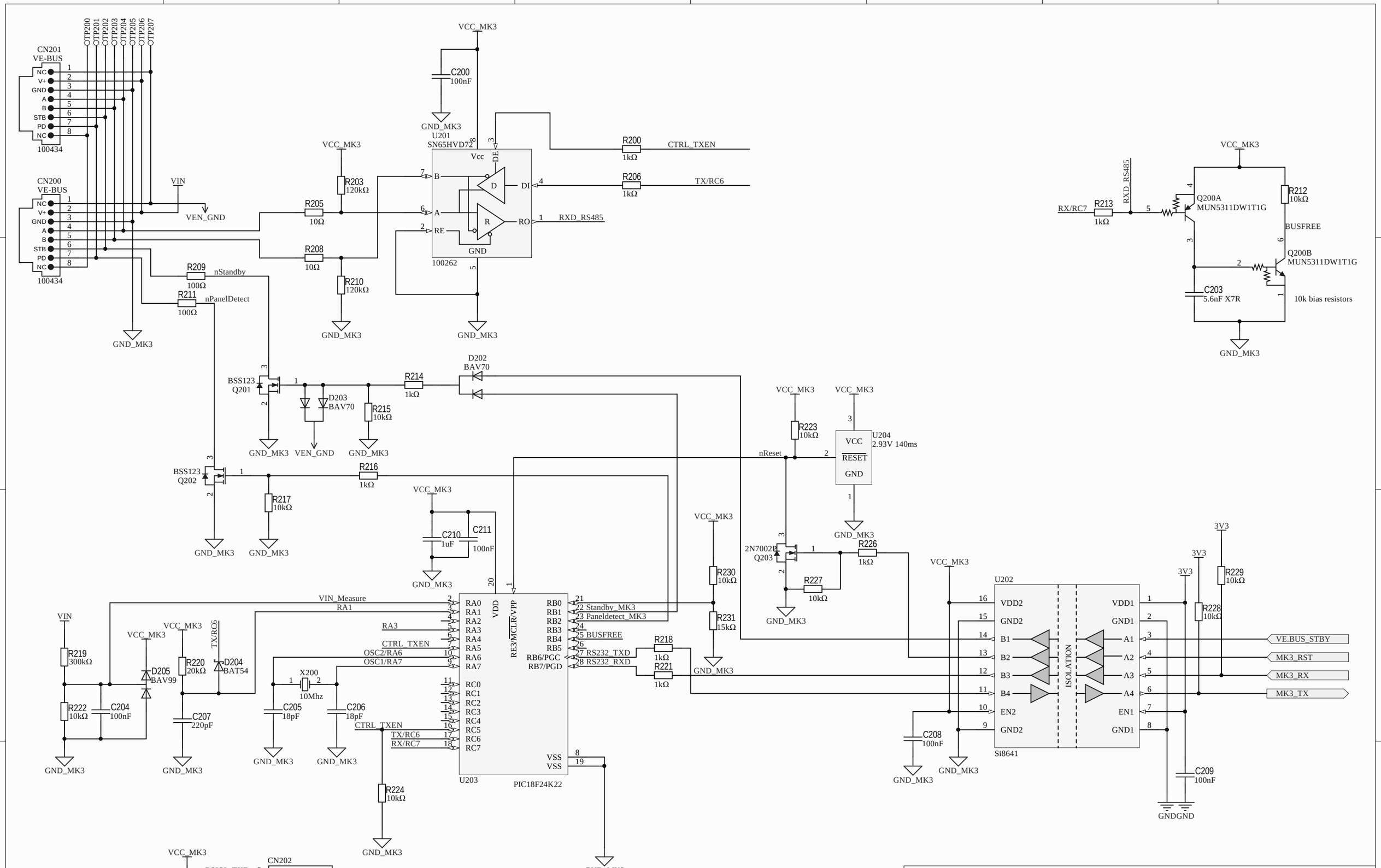

Victron Energy B.V.
De Paal 35, 1351 JG
Almere-Haven The Netherlands
Tel.: +31 (0)36 535 9700

Project: VE BBB Cape.PrjPcb		Desc: MKIII.SchDoc	
Designed by: Thijs Oosterbaan	ModDate: 23-11-2016	Sheet 2 of 5	SVN Rev: 34 PCB V.0.62	Size A3

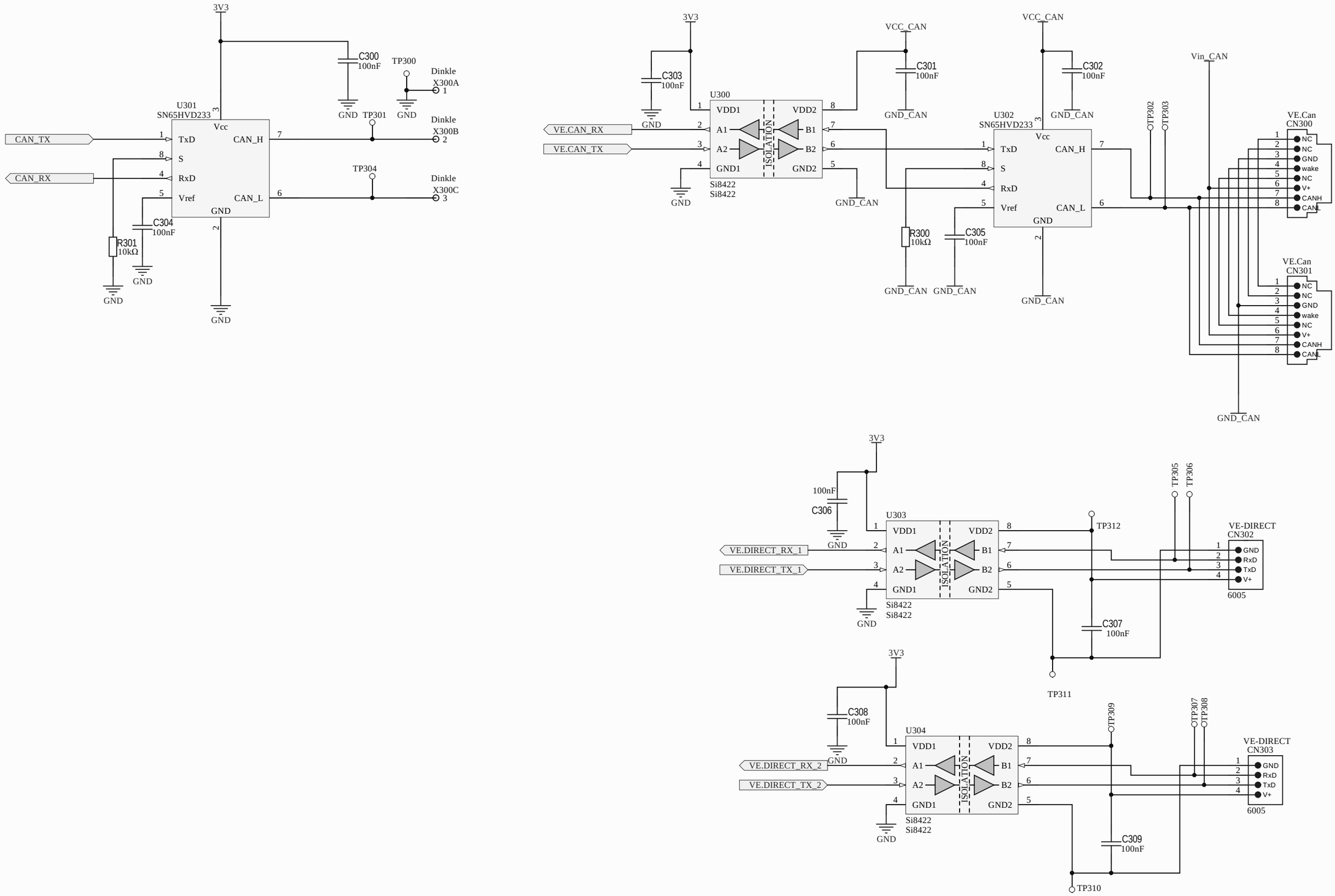

Victron Energy B.V.
De Paal 35, 1351 JG
Almere-Haven The Netherlands
Tel.: +31 (0)36 535 9700

Project: VE BBB Cape.PrjPcb		Desc: CAN and VE.Direct.SchDoc		
Designed by: *	Date: *	Sheet 3 of 5	SVN Rev: 33 PCB V.0.62	Size A3

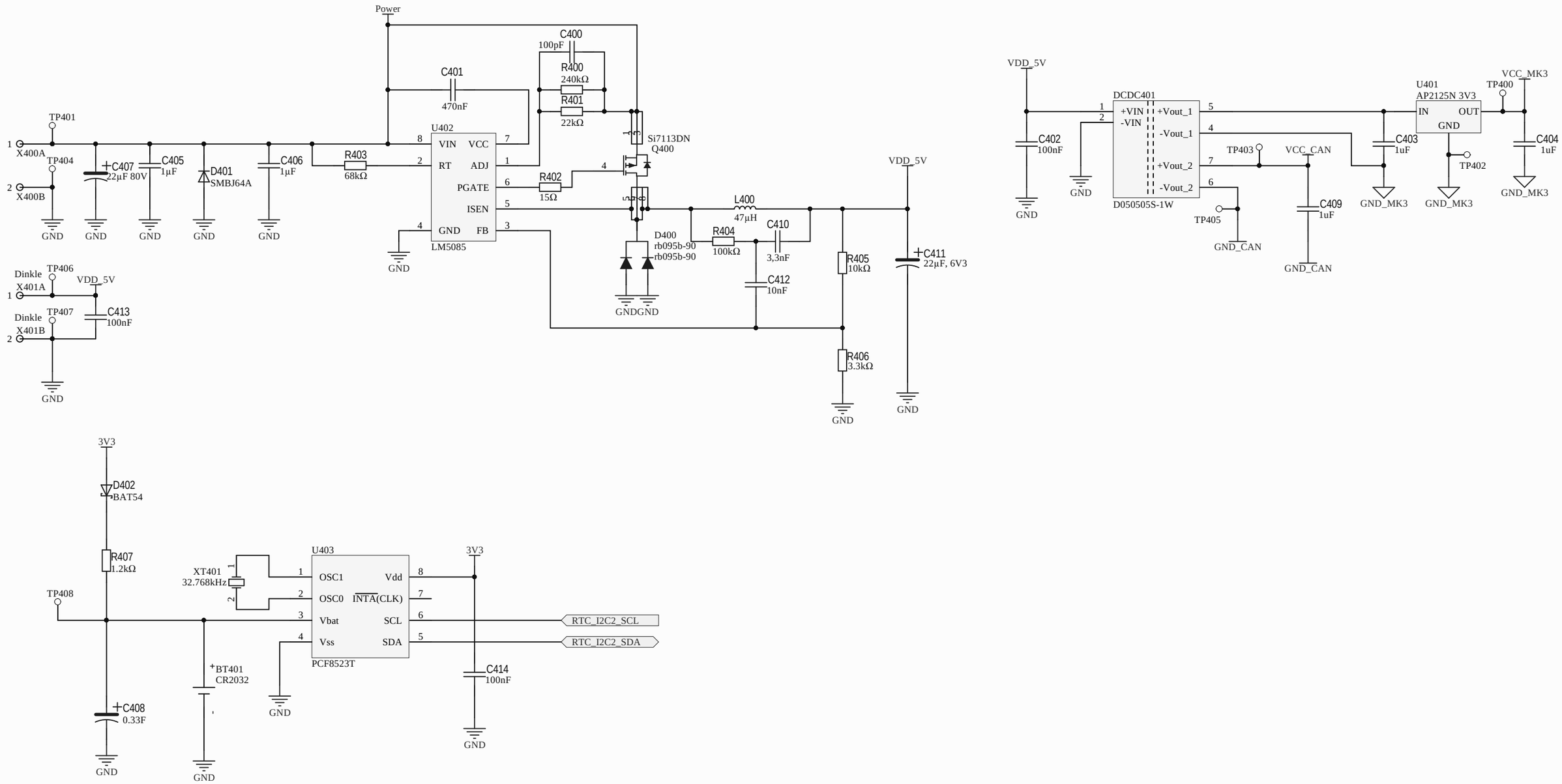

Victron Energy B.V.
De Paal 35, 1351 JG
Almere-Haven The Netherlands
Tel.: +31 (0)36 535 9700

Project: VE BBB Cape.PrjPcb		Desc: PSU + RTC.SchDoc	
Designed by: *	Date: *	Sheet 4 of 5	SVN Rev: 34 PCB V.0.62	Size A3

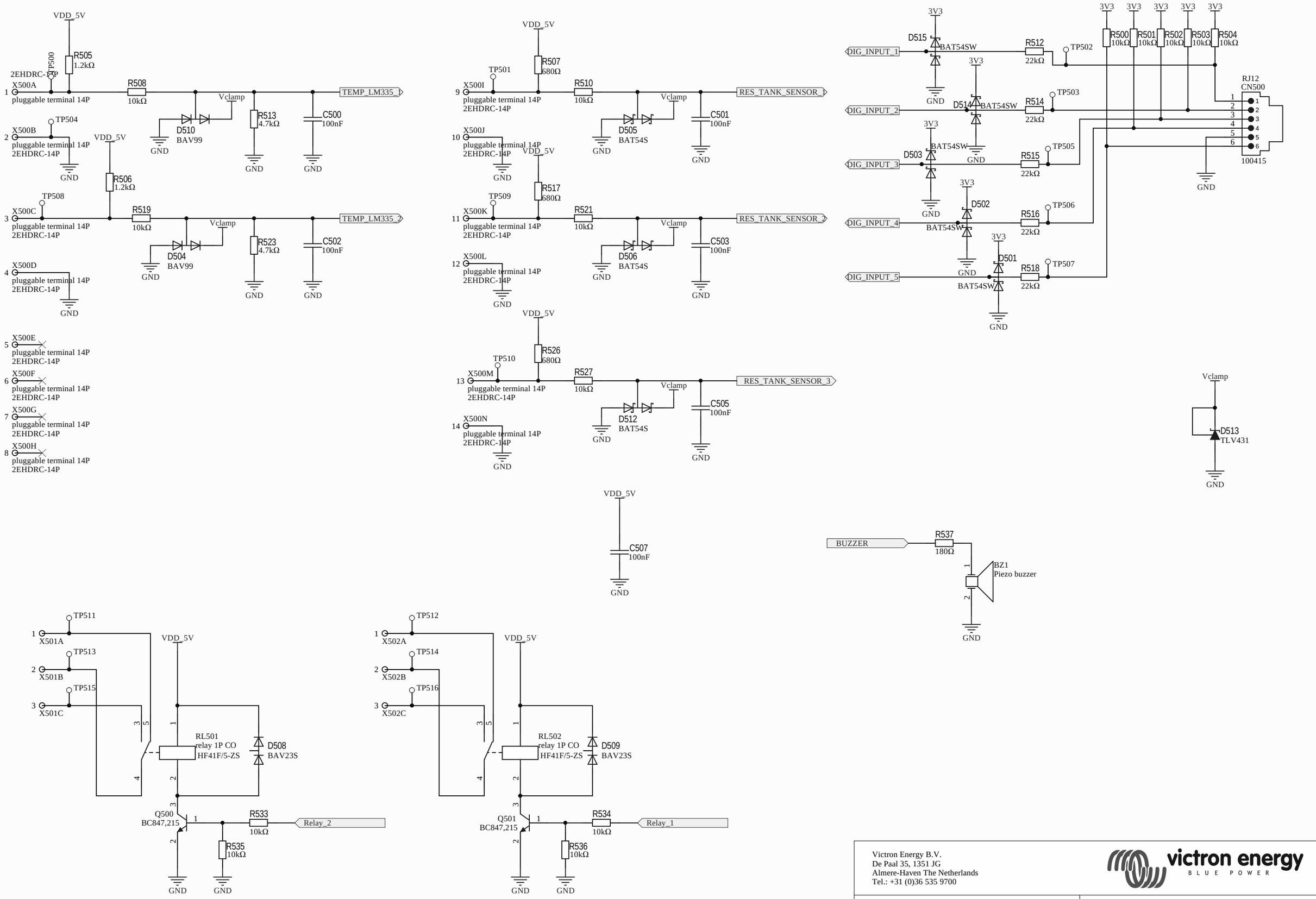

Victron Energy B.V.
De Paal 35, 1351 JG
Almere-Haven The Netherlands
Tel.: +31 (0)36 535 9700

victron energy
BLUE POWER

Project: VE BBB Cape.PrjPcb		Desc: Sensor inputs.SchDoc	
Designed by: *	Date: *	Sheet 5 of 5	SVN Rev: 34 PCB V.0.62	Size A3