4

AC AND DC MEASUREMENTS

4.1 MEASUREMENT

It plays an important role in all branches of engineering and science. It involves detection, acquisition, control and analysis of data. The reliability of a system is directly related to the reliability of measurement. Measuring instruments enable us to examine physical events which are not apparent to our senses. They convert one kind of stimulus to which we are insensitive, into another that can be detected with our eyes or ears, for example a neon tester converts invisible current into light.

Measurement can be defined as an act or result of comparison between the quantity whose magnitude is unknown and a pre-defined standard.

The results of measurement are meaningful if the standard used for comparison purposes are accurately defined and commonly accepted. The apparatus and the method used must be provable.

4.2 SIGNIFICANCE OF MEASUREMENT

(a) It converts one kind of stimulus to which we are insensitive to one that can be detected by our eyes or ears. **Example :** Neon tester.

(b) "When you can measure what you are speaking and express it in numbers, you know something about it," said *Lord Kelvin*. Without measurement we can't say what we are speaking about.

(c) The advancement of science and technology is dependent upon the measurement techniques. The nation's progress is dependent upon how the measurements are made and how the data acquired by measurement is processed.

(d) The reliability of a system is dependent upon the measurement techniques used.

4.3 METHODS OF MEASUREMENT

There are two types of measurement :

1. Direct methods : In this method the unknown quantity is directly compared against a standard. The result is expressed as a numerical number and unit. Direct methods are used for measurement of physical quantities like length, mass and time. The direct method for measurement of length can be utilized with a good degree of accuracy.

2. Indirect methods : Sometimes direct methods are not always possible and feasible. In direct methods humans are involved and so the chances of error are more and it is less sensitive. Therefore direct methods are rarely used.

Measurement system are used.

In the indirect methods a transducer is used which converts the quantity to be measured in analogous form. The analogous signal is now processed and is fed to the end devices.

4.4 TERMS RELATED TO MEASUREMENT

Instrument : It is a device used for determining the value or magnitude of a quantity or variable.

Accuracy : It is the closeness with which an instrument reading approaches the true value of the variable being measured.

Precision : It is a measure of reproducibility of measurements. It is a measure of the degree to which successive measurements differ from one another.

Sensitivity : It is defined as the ratio of the output signal or response of the instrument to a change of input or measured variable.

Resolution : It is the smallest change in measured value to which instrument will respond.

Error : It is the deviation from the true value of the measured variable.

4.5 ACCURACY AND PRECISION

describe the common

Accuracy refers to closeness with which instrument reading approaches the true value whereas precision refers to the reproducibility of the measurements. Accuracy and precision are two totally different terms so a system which is precise need not be accurate and vice versa.

The difference between accuracy and precision can be given by the following example.

Consider two voltmeters of the same model and make to be compared. Both meters have knife edge pointers and mirror backed scales to avoid parallax and have carefully calibrated scales so both the meters can be read to the same precision. If the value of series resistance in one meter changes considerably its readings will be in error by a large amount. Thus the accuracy of two meters may be quite different. Thus in the above, precision of two meters is same but the accuracy is different. Accuracy of system is influenced by intrinsic error, environment and instability of electrical zero. The accuracy of a complete system is dependent upon the individual accuracies.

If ± a, ± b, ± c are accuracy limits and A is the overall accuracy then the lowest limit of accuracy is expressed as

$$A = \pm (a + b + c)$$

and the root mean square accuracy is given as

$$A = \sqrt{a^2 + b^2 + c^2}$$

Precision of a system depends upto the precision error, conformity and number of significant figures.

4.6 ERRORS

The accuracy of a system depends upon the errors. Errors are classified into three types. Gross errors, systematic errors and random errors.

1. **Gross errors :** It occurs due to human mistakes like using the instruments, recording and measurement of results. These errors can be avoided by studying how to use the instrument and where the instrument is suitable, while using a voltmeter the loading effect should be taken into account. At least two to three readings should be taken and while taking the readings the parallax should be avoided.

2. **Systematic errors :** These errors occur due to the shortcomings of the instruments. These errors are directly proportional to the age of instruments and depends upon other factors like environment and how the instrument is used by the user.

Instrumental errors occur due to change in sensitivity, zero drift, calibration error etc. Instrumental errors can be avoided by selecting a suitable instrument for a particular measurement, applying correction factor after determining the error and calibrating the instrument against a standard.

Environmental errors occurs due to changes in environmental conditions like temperature, pressure, humidity, magnetic and electric fields. These errors can be minimized by the use of compensation circuits, hermetically sealing and magnetic shields.

3. Random errors : These errors occur due to unknown causes and occur even when all the errors have been accounted for. The magnitude and direction of these errors is not known. They are caused due to friction, noise and other phenomena. These errors can be taken care of upto some extent by the use of statistical analysis.

4.7 PROBLEMS

(a) *Add 826 ± 5 to 620 ± 3.*

Solution :

$N_1 = 826 \pm 5 \ (= \pm 0.605\%)$

$N_2 = 620 \pm 3 \ (= \pm 0.483\%)$

Sum $= 1446 \pm 8 \ (= \pm 0.553\%)$.

(b) *Subtract 430 ± 4 from 500 ± 4 and express the range of doubt in the answer as percentage.*

Solution :

$N_1 = 500 \pm 4 \ (= \pm 0.8\%)$

$N_2 = 430 \pm 4 \ (= \pm 0.93\%)$

Difference $= 70 \pm 8 \ (= \pm 11.42\%)$.

(c) *A set of independent voltage measurements are taken by 5 observers as 110.01, 110.11, 110.08, 110.21 and 110.9. Calculate (i) the average voltage (ii) the range of error.*

Solution :

(i) $$E_{av} = \frac{E_1 + E_2 + E_3 + E_4 + E_5}{5}$$

$$= \frac{110.01 + 110.11 + 110.08 + 110.21 + 110.9}{5}$$

$$= 110.262 \text{ V}$$

(ii) Range $= E_{max} - E_{av} = 110.9 - 110.262 = 0.638$ and

Range $= E_{av} - E_{min} = 110.262 - 110.01 = 0.252$

Average range of error $= \dfrac{0.638 + 0.252}{2} = \pm 0.445$ V.

A voltmeter having a sensitivity of $\frac{2000\ \Omega}{V}$, reads 200 v on its 300 v when connected across unknown resistance in series with milliammeter. the milliammeter reads 10 mA, calculate

) the apparent resistance of the unknown resistor

) the actual resistance of the unknown resistor

) the error due to loading effect of voltmeter.

olution :

) The total circuit resistance is

$$R_T = \frac{V_T}{I_T} = \frac{200\ v}{10\ mA} = 20\ K\Omega$$

Neglecting the resistance of voltmeter, the value of unknown resistance is

$$R_x = 20\ K\Omega$$

ii) The voltmeter resistance is

$$R_v = \frac{2000\ \Omega}{V} \times 200 = 4 \times 10^5\ \Omega$$

The voltmeter is in parallel with unknown resistance

$$\therefore\ R_T = \frac{R_x - R_v}{R_x + R_v},\quad R_x = \frac{R_T R_v}{R_v - R_T}$$

$$R_x = \frac{20 \times 10^3 \times 4 \times 10^5}{4 \times 10^5 - 20 \times 10^3} = 21.052\ K\Omega$$

(iii) % error $= \frac{\text{Actual} - \text{Apparent}}{\text{Actual}} \times 100$

$$= \frac{(21.052 - 20) \times 10^3}{21.052 \times 10^3} \times 100$$

$$= 5\%.$$

(e) *Three resistors have the following ratings :*

$R_1 = 37\ \Omega \pm 5\%$, $R_2 = 100 \pm 5\%$, $R_3 = 20 \pm 5\%$.

Determine the magnitude and limiting error in ohm and in percent of sistance of these resistances connected in series.

Solution :

The value of the resistances are

$$R_1 = 37 \pm \frac{5}{100} \times 37 = 37 \pm 1.85\ \Omega$$

$$R_2 = 100 \pm \frac{5}{100} \times 100 = 100 \pm 5\ \Omega$$

$$R_3 = 20 \pm \frac{5}{100} \times 20 = 20 \pm 1\ \Omega$$

The resultant resistance is

$$R = (37 + 100 + 20) \pm (1.85 + 5 + 1)$$

$\therefore$ Magnitude of resistance = $157 \pm (7.85)$

Error in ohm = $\pm$ 7.85

Percent limiting error = $\frac{\pm 7.85}{157} \times 100 = \pm 5\%$.

4.8 GALVANOMETER

It is an instrument used for detecting presence of small voltages and currents. Galvanometer is very useful in bridge circuits to indicate current.

Principle : A coil of fine wire is suspended in a magnetic field produced by a permanent magnet. As per the law of electromagnetic the coil will rotate in magnetic field when it carries electric current. The coil continues to deflect until its electromagnetic torque balances the mechanical counter torque so the coil deflection is a measure of the current carried by the coil.

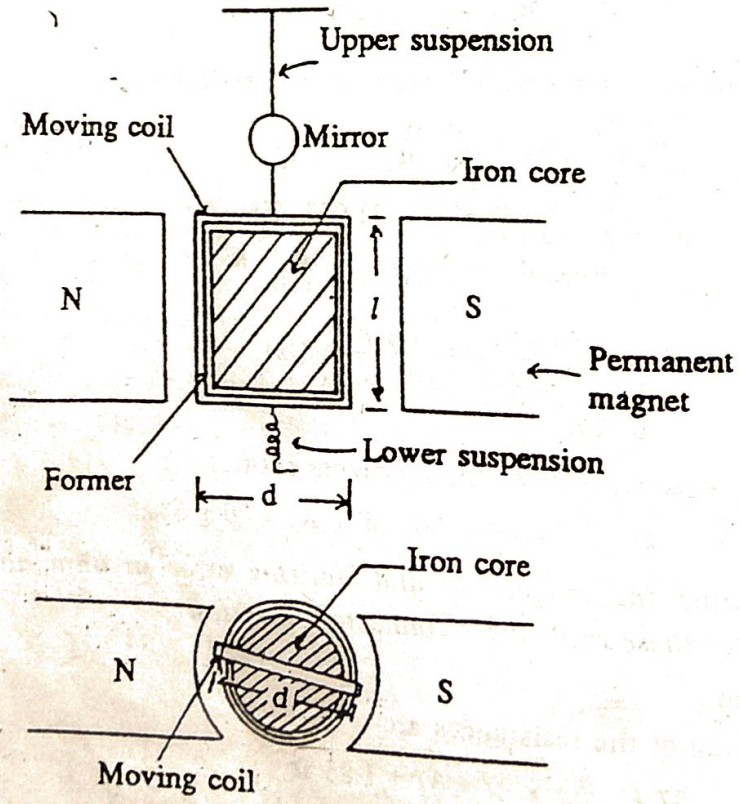

Fig. 4.1 Galvanometer

Construction : It consists of moving coil, damping, suspension, indication and zero setting.

1. **Moving coil :** It is current carrying element. It is either rectangular or circular in shape and is consisting of number of turns of fine wire. It is suspended so that it can rotate in vertical axis and coil is placed in a horizontal magnetic field. The shape of the iron core depends upon the shape of the coil. If the coil is circular the iron core is spherical and if the coil is rectangular the iron core is cylindrical.

2. **Damping :** Due to the production of eddy currents in the former a damping torque is obtained. One can obtain critical damping, over damping or under damping depending upon the value of resistance connected in series with the galvanometer.

3. **Suspension :** The upper suspension is consisting of gold or copper wire, it is not so strong hence it must be handled carefully.

4. **Indication and zero setting :** The suspension carries a small mirror and a scale is provided to measure the reading.

If T = Torque

B = flux density in the air gap

A = ld = effective coil area

I = current in coil

N = No. of turns

l = length of vertical side of coil

d = length of horizontal side of coil

K = spring constant

θ = final deflection

The deflecting torque is given by

$$T = BAIN \quad \ldots (1)$$

because of this torque the coil is going to deflect and it will come to rest only when the deflecting torque becomes equal to the restoring torque of the spring.

$$\text{Restoring torque} = K\theta \quad \ldots (2)$$

i.e. $$BAIN = K\theta \quad \ldots (3)$$

From (1) and (2) we see that the deflecting torque is directly proportional to the current and the restoring torque is directly proportional to the deflection. So we may say

$$\theta \propto I$$

So the deflection produced is directly proportional to the current.

4.9 PMMC (PERMANENT MAGNET MOVING COIL)

It is called as PMMC or d'Arsonval meter.

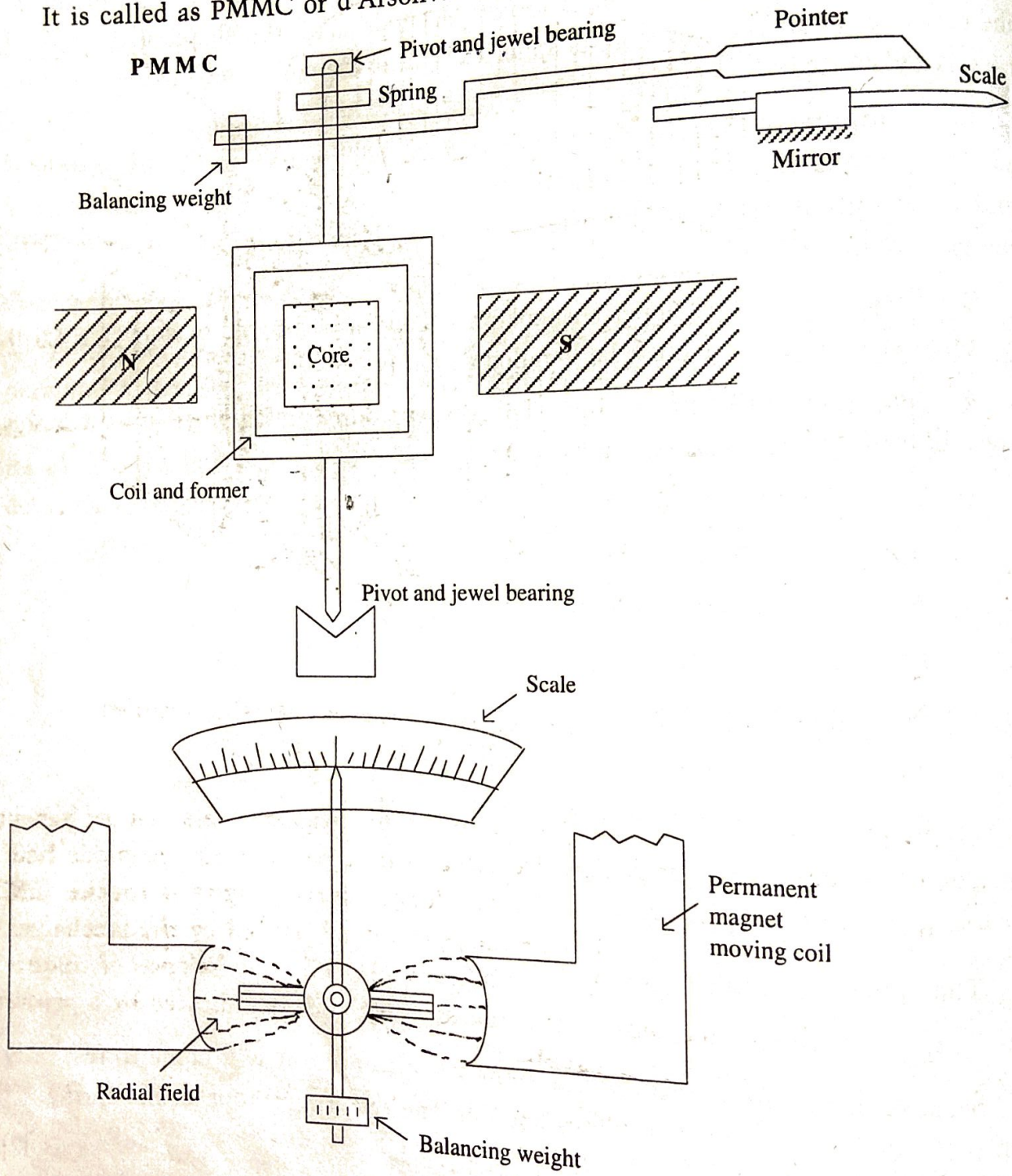

Fig. 4.2 Permanent magnet moving coil instrument

The permanent magnet coil instrument is the most accurate type for d.c. measurements. The working principle of those instruments is the same as that of the d'Arsonval type of galvanometers, the difference being that a direct reading instrument provided with a pointer and safe.

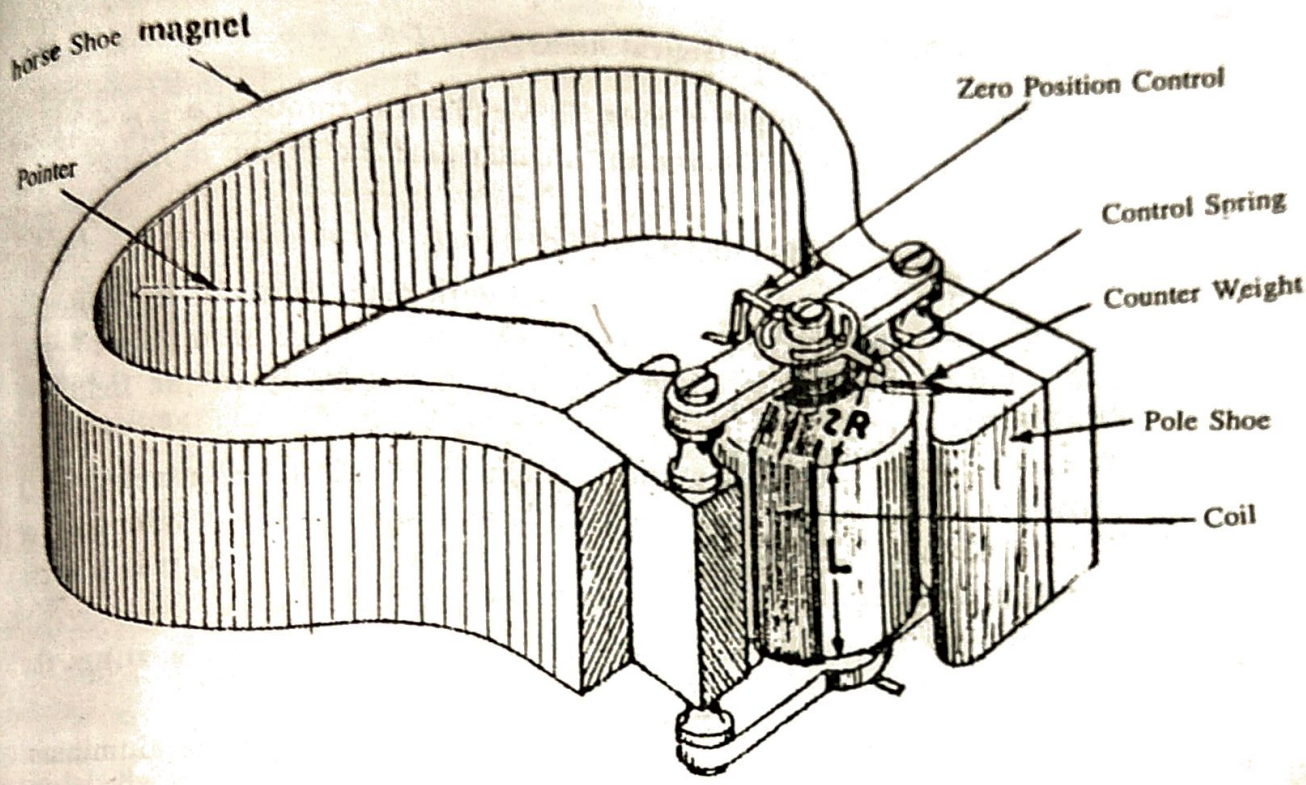

Construction details of the external magnet PMMC movement.

Fig. 4.3

Principle Operation : A coil is suspended in the magnetic field of a permanent magnet. The coil is suspended so that it can rotate freely in the magnetic field. When current flaws in the coil, the developed **electromagnetic torque** (EM) causes the coil to rotate. The EM torque is counter balanced by the mechanical torque of control springs attached to the movable coil. The balance of torques, and therefore the **angular position** of the movable coil, is indicated by a pointer against a fixed reference called **scale**.

The equation for the developed torque, derived from the basic law for electromagnetic torque is

$$T = B \times A \times I \times N$$

where, T = torque (N – M)

B = flux density in the air gap [Webers/Square meter (testor)]

A = effective coil area (m^2)

I = current in the movable coil (A)

N = turns of wire on the coil.

Mechanical torque or Restoring torque is developed by spring control as,

$$T_C = K\theta$$

where, K = spring constant

For final steady deflection $T_C = T$.

When Electromagnetic torque is equal to Mechanical torque (i.e. $T_C = T$), the moving coil will stop the rotation and the angular position of the movable coil is indicated by a pointer.

Construction of PMMC instruments :

1. **Moving coil :** The moving coil is wound with many turns of enamelled or silk covered copper wire. The coil is mounted on a rectangular aluminium firmer which is pivoted on jewelled bearings. The coil moves freely in the field of a permanent magnet.

2. **Magnet system :** Old style magnet system consisted of a relatively long U shaped permanent magnets having soft iron pole pieces. Owing to development of materials like **Alcomax** and **Alnico**, which have a high coercive force, it is possible to use smaller magnet lengths and high field intensities.

3. **Control :** When the coil is supported between two jewel bearings the control torque is provided by two phosphor bronze hair springs.

4. **Damping :** Damping torque is produced by movement of the aluminium former moving in the magnetic field of the permeant magnet.

5. **Pointer and Scale :** The pointer is carried by the spindle and moves over a graduated scale.

Advantages of PMMC :

(a) It has a linear scale.

(b) Power consumption is low.

(c) Range of the meter can be increased further by introducing resistors in shunt or series.

(d) High torque/weight ratio.

(e) No hysteresis loss.

(f) Not affected by stray magnetic field.

Disadvantages of PMMC :

(a) They are used for DC measurements. They can used for AC measurement only after introducing a rectifier circuit.

(b) They are costly than moving iron instruments.

(c) Errors are introduced due to temperature and friction.

4.10 PROBLEMS

(a) *The full scale deflection current of a moving coil meter is 100 μA. The internal resistance of the meter is 1 KΩ. Find the maximum voltage this meter can read directly.*

Solution :

Full scale deflection current = 100×10^{-6} A

Meter resistance = 1 KΩ

As per Ohm's law V = IR

Maximum voltage read = $100 \times 10^{-6} \times 1 \times 10^{3}$

= 100×10^{-3} = 100 mV.

(b) *A moving coil voltmeter with a resistance of 20 Ω gives a full scale deflection with a potential of 50 mV. The coil has 100 turns and depth of 4 cm and width of 3 cm. The controlling torque exerted by the spring is 50×10^{-6} N-m for full scale deflection. Calculate the flux density.*

Solution :

$$\text{Full scale deflection current} = \frac{\text{Full scale deflection voltage}}{\text{Meter resistance}}$$

$$= \frac{50 \times 10^{-3}}{20}$$

$$= 2.5 \times 10^{-3} \text{ A}$$

Full scale deflecting torque = BAIN = Restoring or controlling torque

$$50 \times 10^{-6} = B \times 3 \times 10^{-2} \times 4 \times 10^{-2} \times 2.5 \times 10^{-3} \times 100$$

$$\therefore B = \frac{50 \times 10^{-6}}{3 \times 10^{-2} \times 4 \times 10^{-2} \times 100 \times 2.5 \times 10^{-3}}$$

$$= 0.166 \text{ Wb/m}^2.$$

4.11 DC AMMETER

The basic movement of a DC ammeter is d'Arsonval movement or PMMC galvanometer. The coil winding of basic movement is small and light so it can carry only small currents. The ammeter is connected in series with the circuit and the shunts of suitable resistance are connected in parallel to bypass the current which is in excess of the meter's full scale deflection current. Shunt resistors for low ranges of current are connected internally. For higher ranges of current the shunts are connected externally. In multirange ammeters a tapped resistor is used as a shunt. For the lowest range of current the whole of tapped resistor is used as shunt. For the highest range of current the tapping with the lowest value resistance is used.

Let

R_m = Internal resistance of the movement

R_s = Resistance of shunt

I_m = Full scale deflection current

I_s = Current flowing through shunt resistor

I = $I_m + I_s$ = Total current

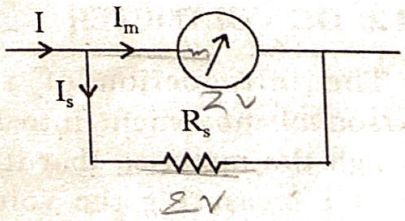

Fig. 4.4 DC ammeter

Since the resistor is connected across the meter, the voltage across the shunt is equal to the voltage across the meter.

$$\therefore \; I_s R_s = I_m R_m$$

$$\therefore \; R_s = \frac{I_m R_m}{I_s}$$

$$I = I_s + I_m$$

$$\therefore \; I_s = I - I_m$$

$\therefore$ the value of resistance which should be connected in order to measure currents upto I ampere is

$$\boxed{R_s = \frac{I_m R_m}{I - I_m}}$$

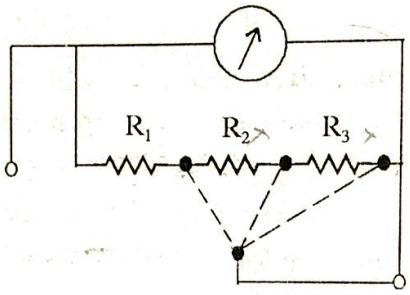

Fig. 4.5 DC ammeter with tapped resistor

The following points should be considered while selecting shunt resistors are :

(a) The temperature co-efficient of shunt and instrument should be low and same.

(b) The resistance of shunt should not be time dependent.

(c) Their temperature should not increase.

Usually Manganin is used for DC shunts and constantan is used for AC shunts.

Disadvantages of shunt :

(a) The use of shunt resistors reduces the accuracy for AC measurements.

(b) The ohmic value of shunt for measurement of current in excess of 100 A is very low and it has to dissipate large power.

(c) For higher value of currents there is problem in providing good electrical insulation.

4.12 DC VOLTMETER

The introduction of a series resistor or multiplier converts the basic d'Arsonval movement into DC voltmeter. The series resistor limits the current through the meter so that it doesn't exceed the full scale deflection current. It is used for measuring the voltage between two points so it should be connected across a source of e.m.f. The terminals of DC voltmeter are marked as "pos" and "neg" with "pos" indicating positive and "neg" indicating negative.

= Full scale deflection current of the meter
= Internal resistance of the meter
= Multiplier resistance
= Full range voltage

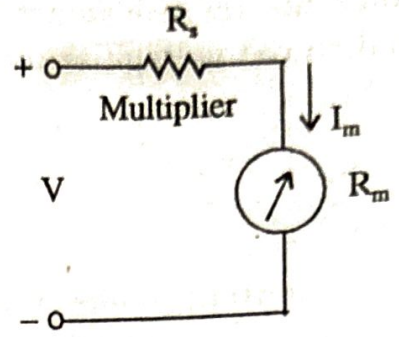

Fig. 4.6 DC voltmeter

om Fig. 4.6 we have

$$V = I_m (R_m + R_s)$$

$$\boxed{R_s = \frac{V}{I_m} - R_m}$$

his is the value of the multiplier resistance which should be connected in with the meter in order to enable the meter to measure a maximum voltage which is having a full scale deflection current of I_m.

or ranges upto 500V the multiplier resistance is mounted internally, above range the multiplier resistance is connected externally.

Multirange voltmeters : Different voltage ranges can be obtained by the oduction of a number of multiplier resistors. These are called as multirange meters and there are two types :

1. Individual multipliers
2. Potential divider arrangement

1. Individual multipliers : Fig. 4.7 shows a multirange voltmeter. It consists our multiplier resistors, four position switch and the basic d'Arsonval movement.

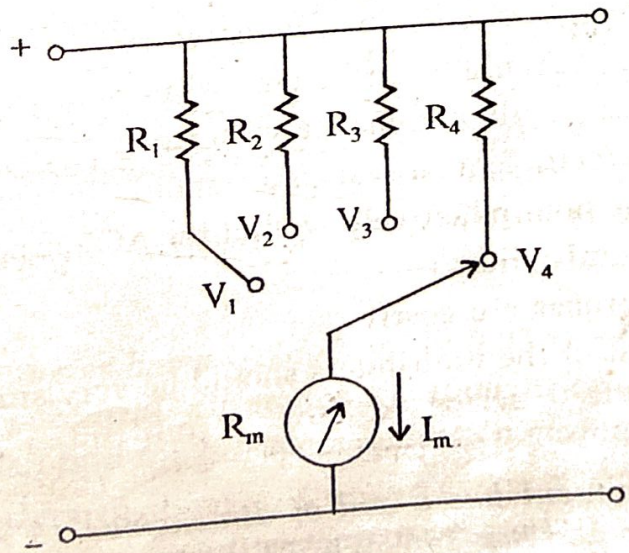

Fig. 4.7 Multirange voltmeter with individual resistances

If V_1, V_2, V_3 and V_4 are the individual voltage ranges which are required then the individual multiplier resistances are given by

$$R_1 = \frac{V_1}{I_m} - R_m, \quad R_2 = \frac{V_2}{I_m} - R_m$$

$$R_3 = \frac{V_3}{I_m} - R_m, \quad R_4 = \frac{V_4}{I_m} - R_m$$

2. Potential divider arrangement : Fig. 4.8 shows more practical arrangement of multiplier resistors in a multirange voltmeter.

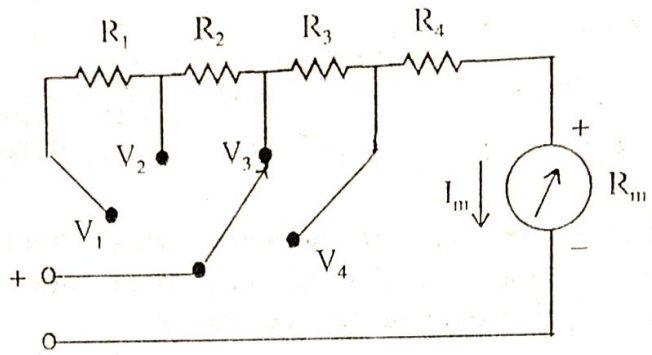

Fig. 4.8 Multirange voltmeter with potential divider

The connectors are made at the junctions of the resistors R_1, R_2, R_3 and R_4 in series to obtain the voltage ranges V_1, V_2, V_3 and V_4. The value of multiplier resistors are given as follows :

$$R_1 = \frac{V_1}{I_m} - R_m, \quad R_2 = \frac{V_2}{I_m} - R_m \text{ and so on.}$$

Voltmeter sensitivity : This is the most important factor to be considered while selecting a voltmeter. It is also called as the ohms per volt rating. It is equal to the reciprocal of the full scale deflection current.

$$S = \frac{1}{I_{fsd}} \frac{\Omega}{V}$$

$\therefore$ the multiplier resistance can be calculated as $R_s = (S \times V) - R_m$.

The following points should be considered while selecting multipliers :

(a) Their resistance should not change with time.

(b) Temperature co-efficient of resistance should be very less.

(c) They should be non-inductively wound for AC purpose.

Disadvantages of multipliers :

(a) High voltage probes are costly.

(b) Leakage current of the multipliers should be very small.

4.13 PROBLEMS

(a) *A PMMC instrument has a coil of dimensions 15 × 12 sq.mm. The flux density in the air gap is 1.8×10^{-3} Wb/m² and spring constant is 0.14×10^{-6} N/rad. Determine the number of turns required to produce a deflection of 90° with a current of 5 mA.*

tion :

ection = $\theta = 90^o = \frac{\pi}{2}$ rad.

pointer becomes steady when

lecting torque = Restoring torque

$IN = K\theta$

$\times 10^{-3} \times 15 \times 12 \times 10^{-6} \times 5 \times 10^{-3} \times N = 0.14 \times 10^{-6} \times \frac{\pi}{2}$

$\boxed{N = 136 \text{ turns}}$.

) *The full scale deflection current of PMMC instrument is 1 mA and its ance is 10 Ω, find the resistance of the shunt for measuring currents upto 20A.*

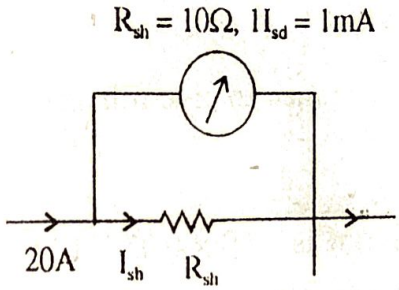

Solution :

The current through shunt = I_{sh} = 20 – 1 mA = 19.999A

Voltage across shunt = Voltage across meter = 10 × 1 mA = 0.01V

$\therefore$ Shunt resistance = $R_{sh} = \frac{I_c \times R_c}{I_1 - I_c}$

$$R_{sh} = \frac{0.01}{19.999}$$

$$= 5 \times 10^{-4}\ \Omega.$$

(c) *A 10 mA meter movement with an internal resistance of 100 Ω is to be onnected into 0-100 mA ammeter. Calculate the value of shunt resistance.*

Solution :

Current through shunt resistance = $I_{sh} = I - I_m = 100 - 10 = 90$ mA

$$R_{sh} = \frac{I_m R_m}{I_{sh}} = \frac{10 \times 100}{90}$$

$$= 11.11\ \Omega.$$

(d) *A moving coil ammeter has a fixed shunt of 0.02 Ω, with a coil resistance of R = 1000 Ω and a potential difference of 1000 mV across it, full scale deflection is obtained then find the full scale deflection current.*

(i) *Find the current through shunt*

(ii) *Find the value of R to give full scale deflection when the current through shunt is (1) 10 A (2) 20 A*

(iii) *Find the value of R for which 40% deflection is obtained when I = 50 A.*

Solution :

Full scale deflection current = $I_{fsd} = \frac{1000 \text{ mV}}{1000} = 1 \text{ mA}$

(i) Current through shunt = $I_{sh} = \frac{1000 \text{ mV}}{0.02} = 50 \text{ A}$

(ii) (1) Voltage across shunt for a current of 10 A is

$V = 10 \times 0.02 = 0.2 \text{ V}$

$\therefore$ Value of meter resistance to give full scale deflection is $R_m = \frac{0.2}{1 \times 10^{-3}}$

$= 200 \ \Omega$

(2) Voltage across shunt for current of 20 A is

$V = 20 \times 0.02 = 0.4 \text{ V}$

$\therefore$ Value of meter resistance to give full scale deflection is $R_m = \frac{0.4}{1 \times 10^{-3}}$

$= 400 \ \Omega$

(iii) Voltage across shunt is = $50 \times 0.02 = 1 \text{ V}$

Current through meter = $0.4 \times I_{fsd} = 0.4 \times 1 \text{ mA} = 0.4 \text{ mA}$

$\therefore$ Value of meter resistance is = $\frac{1}{0.4} \times 10^3 = \frac{1000 \times 10}{4} = 2500 \ \Omega.$

(e) *A PMMC whose resistance is 20 Ω gives a full scale deflection for a voltage of 20 mV. It is to be converted into multirange DC voltmeter with ranges of 0-10 V, 0-50 V, 0-100 V, 0-500 V. Find the value of resistances using potential divider arrangement.*

Solution :

Voltage across meter = $20 \times 20 \text{ mV} = 400 \text{ mV}$

The voltage multiplying factors are

$m_1 = \frac{10}{400 \text{ mV}} = 25$; $m_2 = \frac{50}{400 \text{ mV}} = 125$

$m_3 = \frac{100}{400 \text{ mV}} = 250$; $m_4 = \frac{500}{400 \text{ mV}} = 1250$

The values of the resistances are

$R_1 = (m_1 - 1) R_m = (25 - 1) \times 20 = 480 \ \Omega$

$R_2 = (m_2 - m_1) R_m = (125 - 25) \times 20 = 2 \text{ K}\Omega$

$R_3 = (m_3 - m_2) R_m = (250 - 125) \times 20 = 2.5 \text{ K}\Omega$

$R_4 = (m_4 - m_3) R_m = (1250 - 250) \times 20 = 20 \text{ K}\Omega.$

t is desired to measure the voltage across the 100 KΩ resistor in the shown.

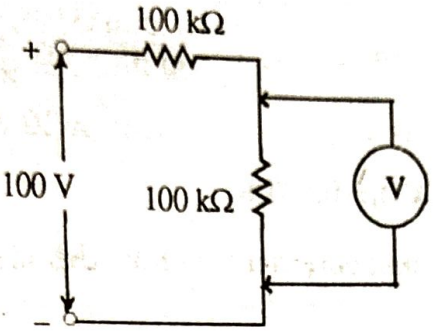

voltmeters are available for this purpose :

meter A with sensitivity of 1000 Ω/V

meter B with sensitivity of 10000 Ω/V

d (i) the reading of each voltmeter

error of each meter expressed as a percentage of true value.

ution :

true voltage across the 100 KΩ resistor is = $\frac{100 \times 100}{(100 + 100)} = 50$ V

Resistance of voltmeter A is

$R_a = S_a V = 1000 \times 50 = 50$ KΩ

w this resistance is in parallel with resistance of 100 KΩ, so the resistance

lel combination is = $\frac{50 \times 100}{150} = 33.33$ KΩ

tage across the combination of voltmeter and resistor = $\frac{33.33}{133.33} \times 100$

= 25 V

tmeter A indicates a voltage of 25 V

$$\text{centage error of voltmeter A} = \frac{\text{Indicated voltage} - \text{True voltage}}{\text{True voltage}} \times 100$$

$$= \frac{25 - 50}{50} \times 100 = -50\%$$

Resistance of voltmeter B is

$R_b = S_b V = 10000 \times 50 = 0.5$ MΩ

w this resistance is in parallel with resistance of 100 KΩ. So the resistance

llel combination is

$$= \frac{0.5 \times 10^6 \times 100 \times 10^3}{100 \times 10^3 + 0.5 \times 10^6} = 83.33 \text{ K}\Omega$$

tage across the combination of voltmeter and resistor

$$= \frac{83.33}{183.33} \times 100 = 45.45 \text{ V}$$

Voltmeter B indicates a voltage of 45.45 V

$$\text{Percentage error of voltmeter B} = \frac{\left(\text{Indicated voltage}\right) - \left(\text{True voltage}\right)}{\text{True voltage}} \times 100$$

$$= \frac{45.45 - 50}{50} \times 100 = -9.1\%.$$

4.14 DIFFERENTIAL VOLTMETER

Basic differential measurement : It is the accurate method for measuring unknown voltage. It indicates the difference between a unknown voltage and known voltage. It is also called as potentiometric voltmeter since the operation is similar to a potentiometer.

Figure shows the basic differential voltage measurement. A null meter is connected between unknown voltage source and the output of standard reference voltage through a voltage divider. The voltage divider can be adjusted to provide accurate voltage of reference source.

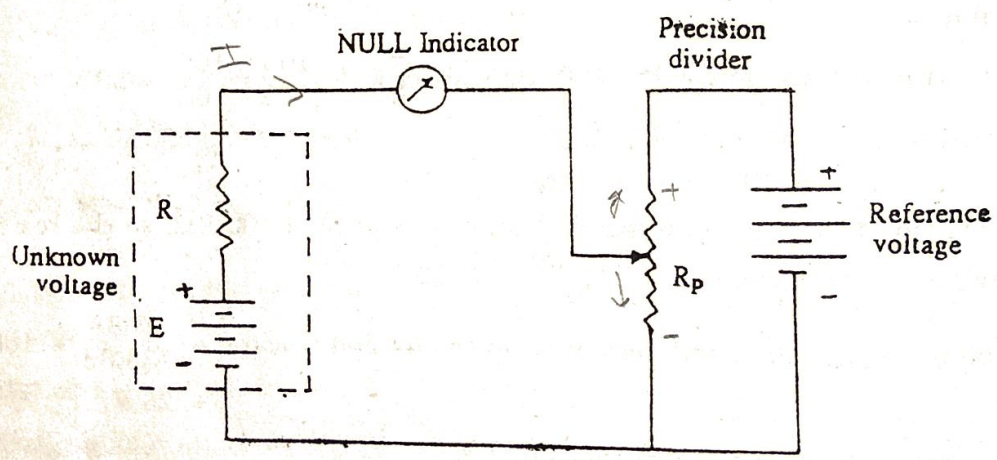

Fig. 4.9 Basic differential voltage measurement

To perform a measurement the output of the reference voltage is so adjusted that it becomes equal to the unknown voltage.

The input resistance is very essential and it may result in loading effect.

DC standard/differential voltmeter :

It can be used for three purposes

(a) DC voltage standard

(b) DC differential voltmeter

(c) DC voltmeter.

(a) Standard mode : In this mode the instrument generates voltage from 0 to 1000 V. This voltage is applied to high DC amplifier with a degenerative voltage feedback so that the output is controlled.

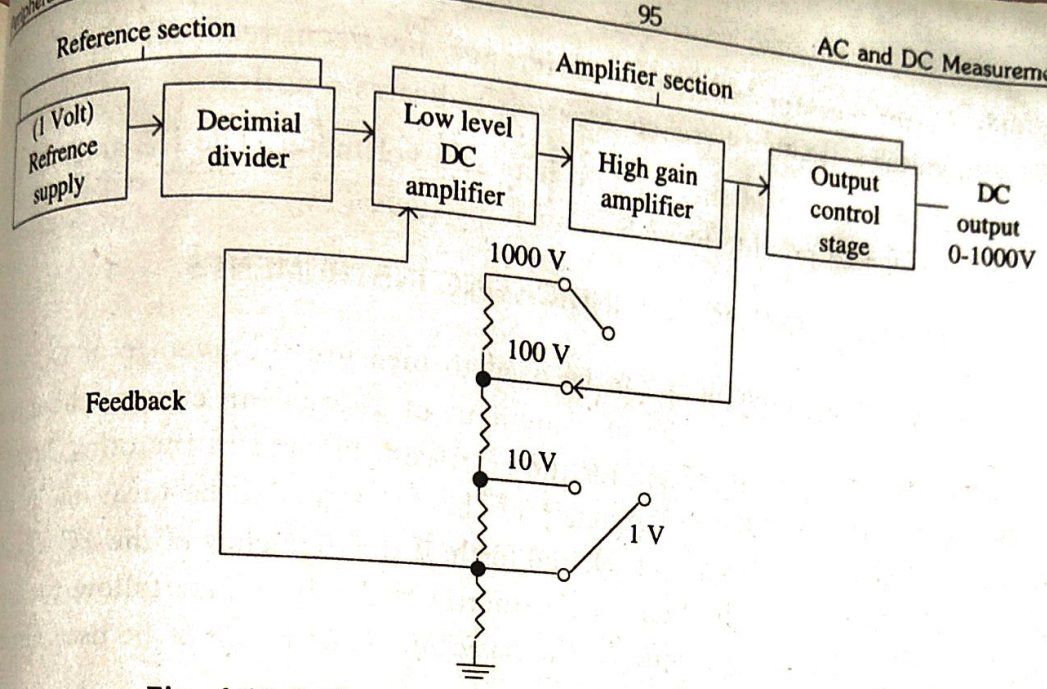

Fig. 4.10 Differential voltmeter in standard mode

(b) Differential voltmeter mode : In this mode the unknown DC voltage is applied to input terminal of amplifier. Half of divider network feeds a part of output voltage to input which in turn controls closed loop gain of the amplifier.

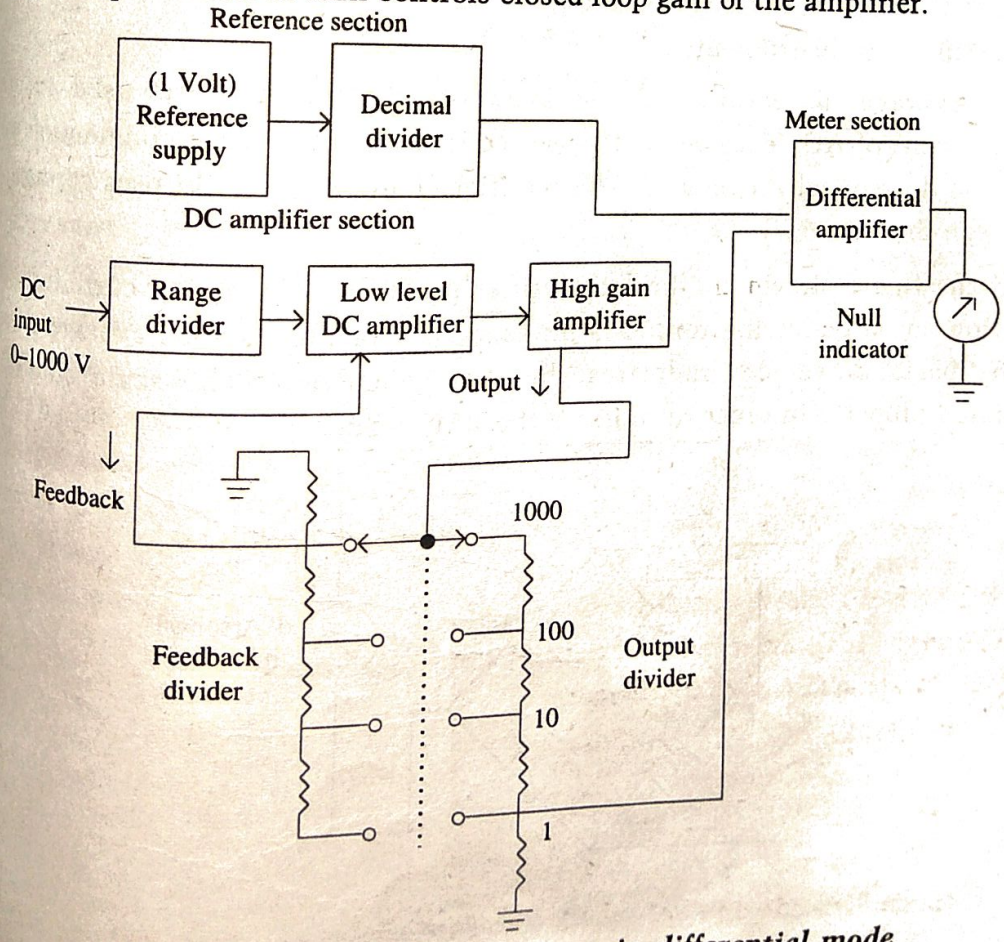

Fig. 4.11 DC differential voltmeter in differential mode

The meter section indicates difference between feedback voltage and reference voltage, if the difference is zero it indicates a null.

(c) DC voltmeter : In this mode it acts as a voltmeter. The DC amplifier acts as a buffer stage to provide to high input impedance.

4.15 ALTERNATING CURRENT INDICATING INSTRUMENTS

The d'Arsonval movement can be used to measure the average or DC value of current. If it is used for the measurement of alternating current the driving torque would be in one direction for the positive cycle and in the other direction for the negative cycle. If the frequency of the AC signal to be measured is very low then the pointer will swing back and forth. If the frequency of the AC signal to be measured is very high then due to inertia the coil cannot follow the rapid reversal of the deflecting torque so the basic movement cannot be used directly for AC measurement.

However it can be used for the measurement of AC also if the torque produced is unidirectional. This can be achieved by rectifying the AC signal or by using the heating effect of AC signal.

Rectifier type instruments :

1. Average detector : These type of instruments are used for the measurement of AC. They generally use rectifier type circuit in conjunction with the basic d'Arsonval movement. The rectifier element generally uses germanium or silicon diode.

In the figure shown the bridge rectifier produces a pulsating current in one direction and a deflecting torque is produced proportional to the average current so the basic movement indicates the average current. The scale should be calibrated properly in order to indicate the RMS value.

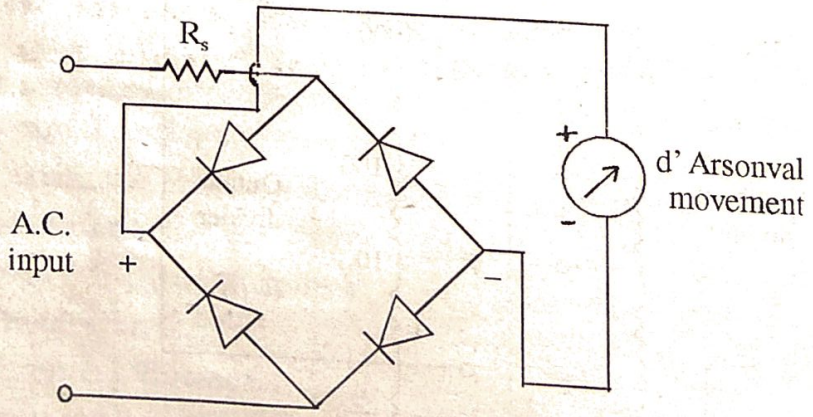

Fig. 4.12

relation between the average and rms value of current (or voltage) is sed by form factor.

form factor is defined as the rms value of the AC wave to the average of the AC wave.

the waveform is sinusoidal the form factor is given by

$$\text{Form factor} = \frac{E_{rms}}{E_{av}} = \frac{\left(\frac{\sqrt{2}}{2}\right) E_m}{\left(\frac{2}{\pi}\right) E_m} = 1.11.$$

Peak detector : As the name indicates this meter is used for measuring the value of the AC signal. It uses a rectifier and storage element like diode. detector is shown in Fig. 4.13.

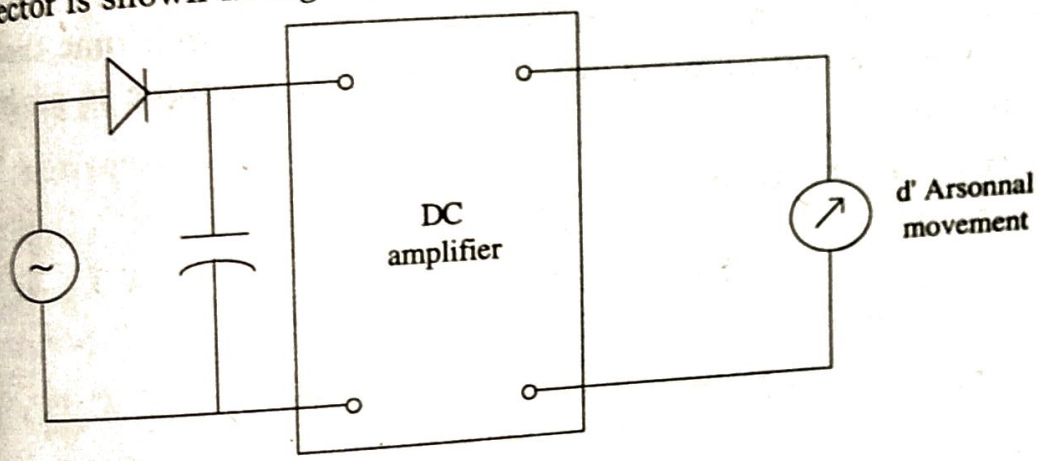

Fig. 4.13 Peak detector

The capacitor charges through the diode to the peak value of the applied tage, the DC amplifier develops the necessary meter current and the meter ows a reading corresponding to the peak value of the applied voltage.

3. **Peak to peak detector :** The peak detector can be used for measuring the ak to peak value by multiplying the meter reading by 2 but this method is plicable only when the waveform is symmetrical. So the peak to peak detector useful for measuring the peak to peak value when the waveform is not mmetrical. Fig. 4.13 shows the peak to peak detector. It is also called as tage doubler.

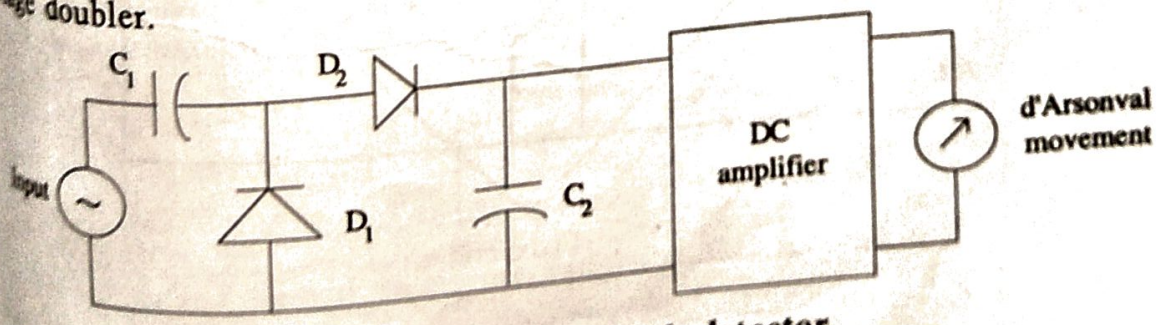

Fig. 4.14 Peak to peak detector

In the negative cycle of the input the diode D_1 is forward biased and the capacitor C_1 charges to the peak value of the negative voltage. During the positive half cycle the diode D_1 is reverse biased and the diode d_2 is forward biased in the steady state the voltage across C_2 is the sum of the voltage across C_1 and the positive peak of the input.

Electrodynamometer : These type of instruments are used as AC voltmeters and ammeters. It can be used as a wattmeter, VAR meter, power factor meter or frequency meter with little modifications. It can be calibrated on DC and then used directly on AC thus establishing a relation between AC and DC so it can be used as a transfer instrument. It can be used at low audio frequencies as well as power frequencies.

Principle : The direction of the field flux is reversed each time the current through the movable coil reverses and a unidirectional torque is produced for both the half cycles.

Construction : It consists of,

1. Fixed coil
2. Moving coil
3. Control
4. Moving system and damping
5. Shielding
6. Cases and scales.

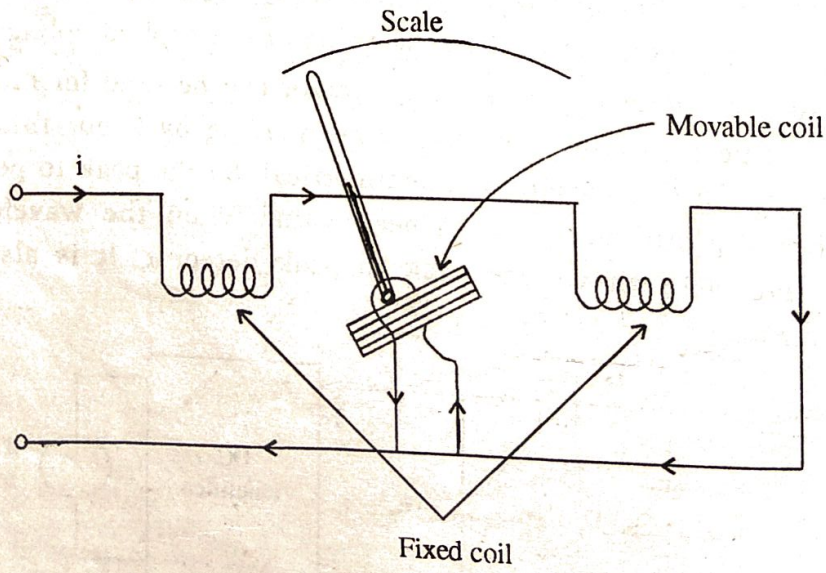

Fig. 4.15 Dynamometer

1. **Fixed coil :** It produces the field and is divided into two sections to produce a uniform field at the centre and allow passage of instrument shaft. They are stranded to minimize the eddy current losses. The coils are clamped against supports which are usually made of ceramic.

2. **Moving coil :** It has one moving coil and is wound on non-metallic former. A non metallic former is used because eddy currents are induced in a metallic former. The moving coil is rigid but light. The fixed and moving coils are air cored.

3. **Control :** Two control springs provide the controlling torque and these springs act as lead to the moving coil.

4. **Moving system and damping :** The moving coil is mounted on an aluminium spindle. It also carries a pointer. Suspension may also be used to provide high sensitivity. For a dynamometer air friction damping is used.

5. **Shielding :** The field produced by the fixed coils is very weak so there are more chances that the reading gets affected by stray magnetic field and earth's magnetic field. They are protected against external magnetic fields by enclosing them in casing of high permeability alloy.

6. **Cases and scales :** The case is highly polished so that it remains dimensionally stable. The case is provided with adjustable levelling screws and spirit level for proper levelling. Scales are hand drawn using machine.

AC differential voltmeter : The AC differential voltmeter is a modification of DC instrument. The unknown AC input voltage is applied to the input alternator which alternates the input signal. The output of the alternator is fed to a amplifier which amplifies the signal.

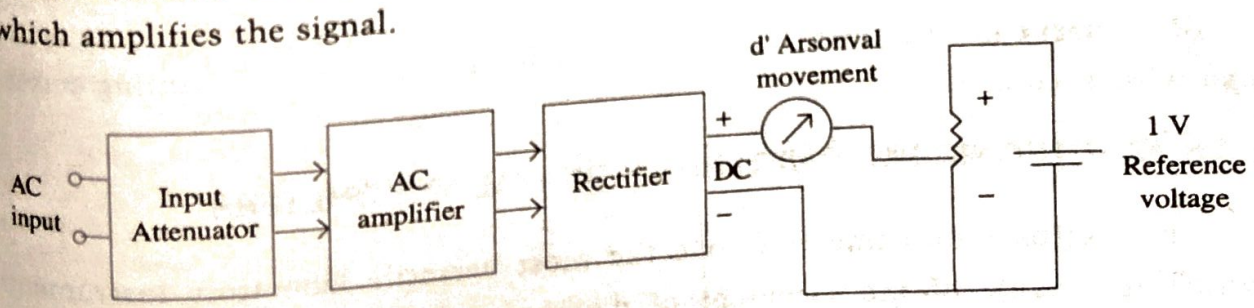

Fig. 4.16 AC differential voltmeter

The amplified output is connected into DC by the rectifier. This DC is proportional to the unknown input AC signal. Now the indication on the d'Arsonval movement is the difference between the two signals.

Factors to be considered while choosing analog voltmeter :

The selection of instrument for practical voltage measurement depends on the situation where it is used. The following factors should be considered while selecting a voltmeter.

1. **Input impedance :** To avoid loading effects the input impedance of voltmeter should be very high in magnitude. It should be atleast higher in magnitude than the circuit whose impedance is to be measured.

The input impedance is a function of shunt capacitance which in turn is inversely proportional to frequency. Therefore at high frequencies the loading effect increases due to decrease in shunt capacitance.

2. **Voltage ranges :** The voltmeter should be provided with sufficient ranges, microvolt, millivolt and volt respectively for measuring the voltage accurately. The scale of the meter should be backed by a meter in order to avoid parallax.

3. **Decibel :** If we want to use the instrument over wide range of voltages then one should use a voltmeter which is provided with a decibel scale.

4. **Sensitivity versus bandwidth :** Noise is a function of bandwidth and the sensitivity of the instrument decreases with an increase in bandwidth. Therefore while selecting a meter for particular sensitivity the bandwidth should also be considered.

5. **Battery operation :** The instrument should be capable of working on a battery. This factor is useful especially for field operation and in areas where there are ground loops.

6. **Current measurement :** The meter should be capable of measuring current also with accuracy.

4.16 ELECTRONIC MULTIMETERS OR DIGITAL MULTIMETERS

An electronic multimeter is one the most versatile laboratory instruments which is capable of measurement of d.c. and AC currents and voltages and resistances. The multimeter generally consists of the following elements,

1. A balanced bridge d.c. amplifier and PMMC indicating instrument.

2. A **RANGE** switch which is an attenuator to limit the value of input voltage to the desired value.

3. A rectifier to convert AC to a proportionate d.c value.

4. An internal battery and additional circuitry for the measurement of resistance.

5. A **Function** switch to select various measurement function of the instrument like current, voltage and resistance.

In addition, the instrument has a built in power supply for operation on power mains, and many cases on or more batteries for operation as a portable test instrument.

A basic digital multimeter (DMM) is made up of several A/D converters, circuitry for counting and an attenuation circuit. A basic block diagram of a DMM is shown in Fig. 4.17.

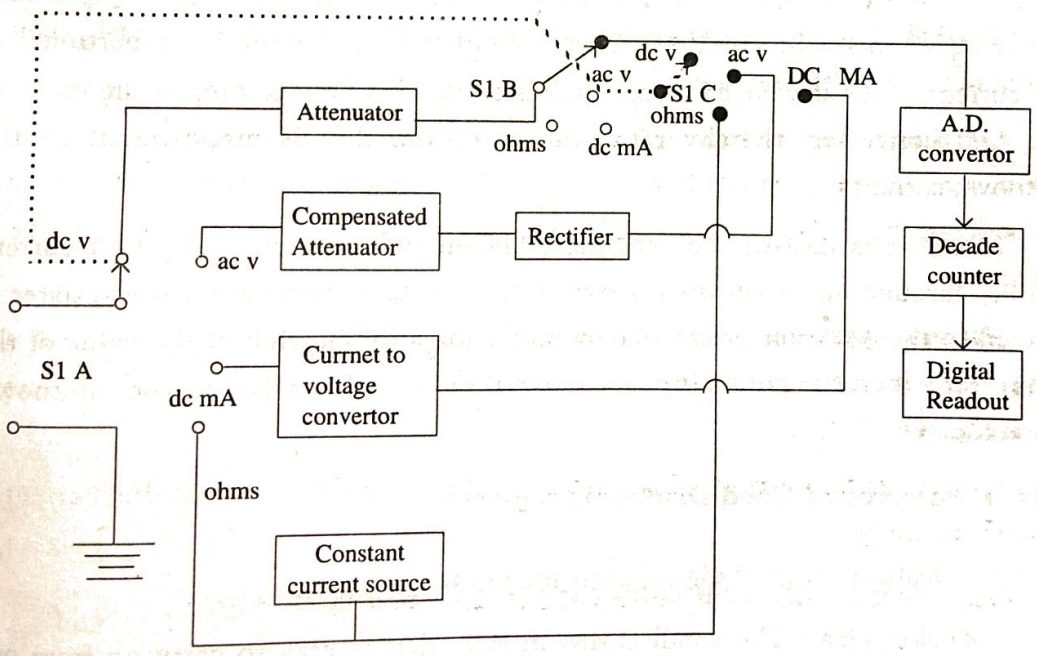

Fig. 4.17 Basic block diagram of DMM

The current to voltage converter shown in the block diagram of Fig. 4.17 can be implemented with the circuit shown in Fig. 4.18.

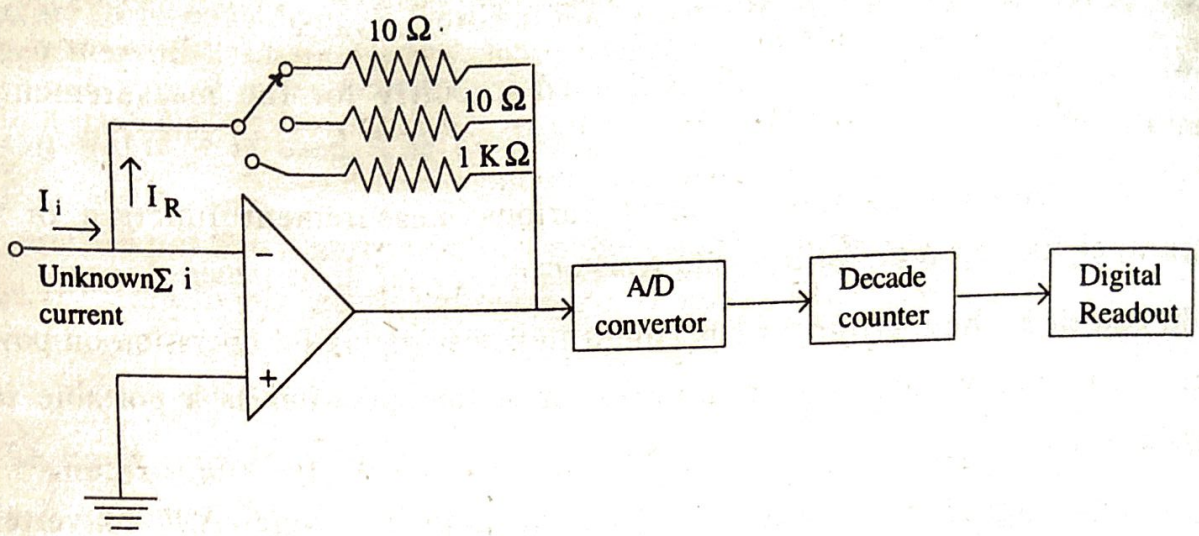

Fig. 4.18 Current to Voltage converter

The current to be measured is applied to the summing junction (Σi) at the input of the op-amp. Since the current at the input of the amplifier is close to zero because of the very high input impendence of the amplifier, the current I_R is very nearly equal to I_i, the current I_R causes a voltage drop which is proportional to the current, to be developed across the resisters. This **voltage drop** is the input to the A/D converter, thereby providing a reading that is proportional to the unknown current.

Resistance is measured by passing 0 known current, from a constant current source, through an unknown resistance. The voltage drop across the resister is applied to the A/D converter, thereby producing an indication of the value of the converter, thereby producing an indication of the value of the unknown resistance.

4.16.1 Features of Good Digital Multimeters

Some features of good digital multimeter are :

1. **Pocket size** : The small DMM in size, that is easy to carry on from one place to another.

2. **Overload protection** : The meter protect itself from overload current or voltages beyond the capability of the meter's measurements.

3. **Autoranging** : The meter automatically selects the proper voltage or resistance range when making measurements.

4. **Detachable probe leads** : The leads can be easily damaged, and sometimes a variety of differently shaped probes are required for different tests.

5.. **Audible continuity test** : A continuity test function causes a beep noise to be heard when continuity exist between the meter test leads.

6. **Automatic power off** : These meters run on batteries, and the batteries can easily be worn down if the meter is accidentally left on. Good meters have an automatic shutoff that turns off the meter if no readings are sensed for a predetermined period of time.

7. **Automatic display hold** : This feature enables the last stable reading to be held on the display even after the reading is taken.

8. **Minimum and maximum trap** : This feature enables the lowest and highest readings to be trapped in memory and held for later display. This is especially useful if you have readings that are fluctuating too quickly to see on the display.

QUESTIONS • 4

1. Explain measurement, its significance and methods of measurement.
2. Define the following terms :
   (a) Accuracy
   (b) Precision
   (c) Sensitivity
   (d) Resolution
   (e) Error.
3. Explain the various types of errors.
4. Explain the working principle of PMMC and its working.
5. Write short notes on :
   (a) DC ammeter
   (b) DC voltmeter
   (c) AC indicating instruments.
6. Give the principle and construction of electrodynamometer.

7. Write short notes on :

   (a) AC differential voltmeter

   (b) DC differential voltmeter.

8. What are the factors to be considered while selecting a voltmeter?

9. Explain the working principle of Galvanometer.

10. Explain the operating principle of PMMC meters.

11. Explain the working principle of DC voltmeter.

12. Explain the working principle of DC ammeter.

13. Draw sketch of galvanometer and explain its operational features.

14. Explain the need of measurement.

15. Explain the working principle of digital Multi-meter.

16. Draw block diagram of digital Multimeter and explain.

Intro

Basic
Std

5

9869524991

OSCILLOSCOPE

INTRODUCTION

It is an electronic instrument which displays electrical signals on the vertical axis compared with time on the horizontal axis. It is very useful in analysis of waveforms. The voltage to be measured is applied to the Y axis or the vertical input of the CRO thus moving the spot up and down in accordance with the instantaneous value of the applied voltage. It can be used to study other physical quantities like pressure, temperature, acceleration, strain etc by converting these quantities into voltages by the use of transducers.

5.1 OPERATION OF CRO

Cathode ray oscilloscope consists of

(a) Cathode ray tube

(b) Vertical amplifier

(c) Delay line

(d) Time base generator

(e) Horizontal amplifier

(f) Trigger circuit

(g) Power supply

The CRT is the heart of the oscilloscope. It produces sharp focused beam of electrons which are accelerated to a very high velocity. The electron beam passes from electron gun to the screen through a set of vertical deflection plates and horizontal deflection plate. The vertical deflection system moves the electron beam on vertical direction and the horizontal deflection system moves the electron beam in horizontal direction.

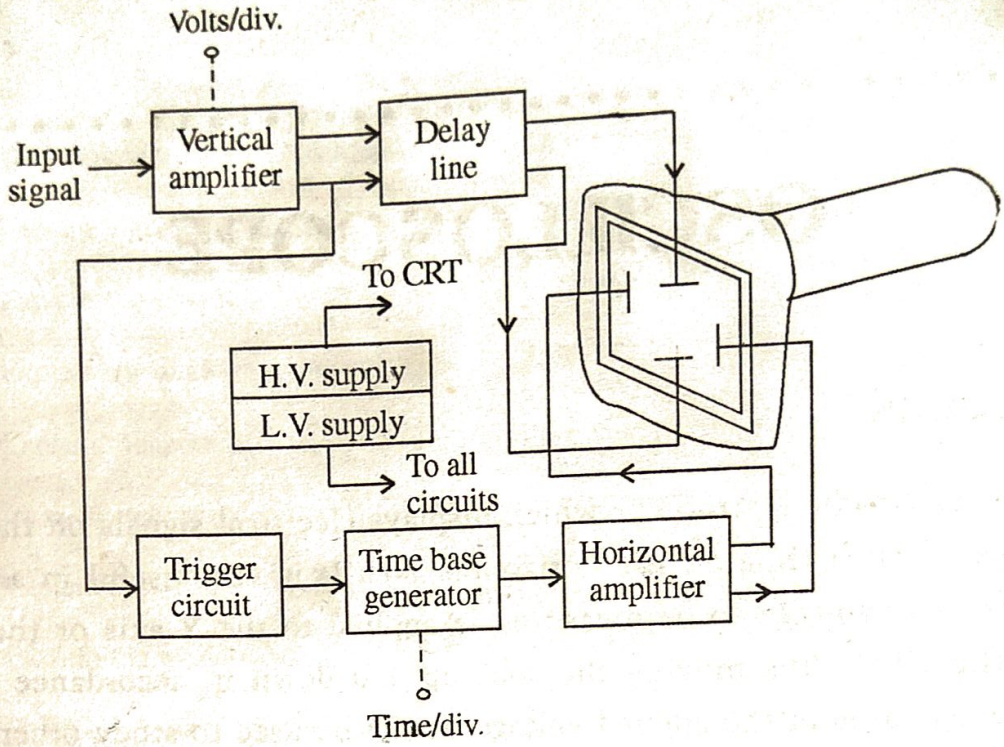

Fig. 5.1 Block diagram of general purpose oscilloscope

The waveform to be analysed is applied to the input of the vertical amplifier. The gain of this vertical amplifier can be adjusted by Volt/Div knob. A saw tooth waveform is generated by the time base generator, the rate of rise of the sawtooth waveform is controlled by the Time/Div knob. Trigger circuit produces a trigger pulse which is used to start the time base generator; which in turn starts the horizontal sweep of the CRT. The purpose of the delay line is to retard the arrival of the input waveforms at the vertical deflection plates until the trigger and time base circuits have a chance to start the sweep of the beam. The power supply section generates high voltage for operating the CRT and low voltages for operating the electronic circuit of the CRT.

Fig. 5.2 shows the tracing of image on the oscilloscope when horizontal and vertical deflection voltages are applied. A sawtooth or sweep voltage is applied to the horizontal plates and the signal to be analysed is applied to the vertical deflection plates of the CRT, which in this case is a sine wave. As the sweep voltage increases linearly with time, the CRT spot moves across the screen at a constant velocity from left to right. When the sawtooth voltage drops suddenly from maximum to zero the CRT spot returns back to starting position on the extreme left side of the screen. This is how a waveform traced on a CRO screen.

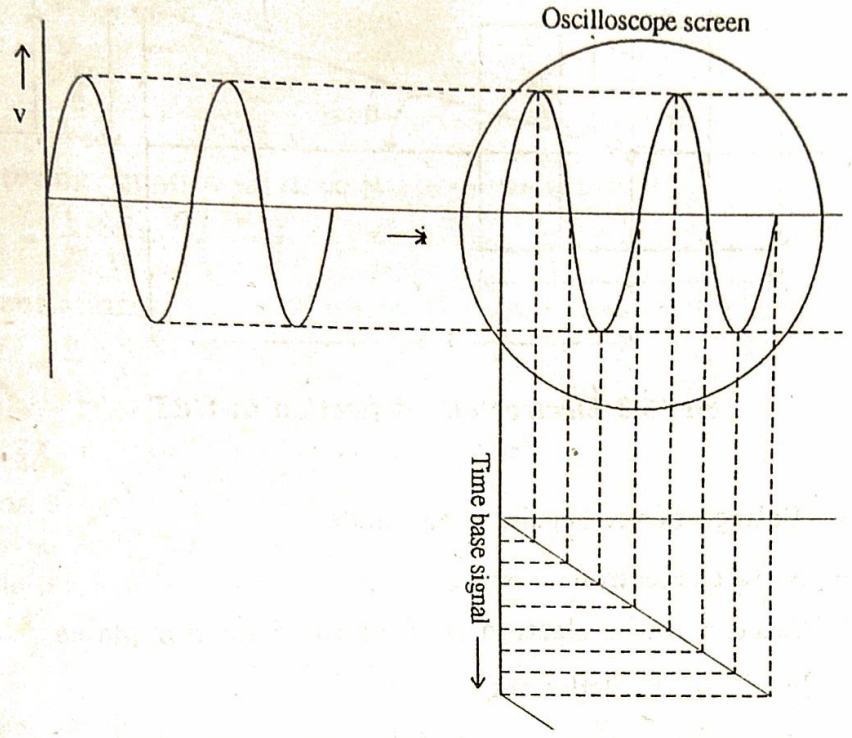

Fig. 5.2 CRO Tracing an image on the screen when horizontal and vertical voltages are applied

Usually phosphor is used on the inside of the screen. Some crystalline materials (e.g. phosphor, zinc oxide) emit light when stimulated to radiation. This property is called as fluorescence.

Phosphorescence : Some materials continue to emit light even after the source of excitation is cut off this is called as phosphorescence.

Persistence : The time for which phosphorescence occurs is called as persistence.

Luminance : The intensity of the light emitted from CRT screen is called as Luminance.

5.2 ELECTROSTATIC DEFLECTION

Consider two plates separated by a distance d. A electrostatic field will be produced due to the applied potential in the Y direction. A electron entering the field will experience a force in the Y direction and will be deflected in that direction.

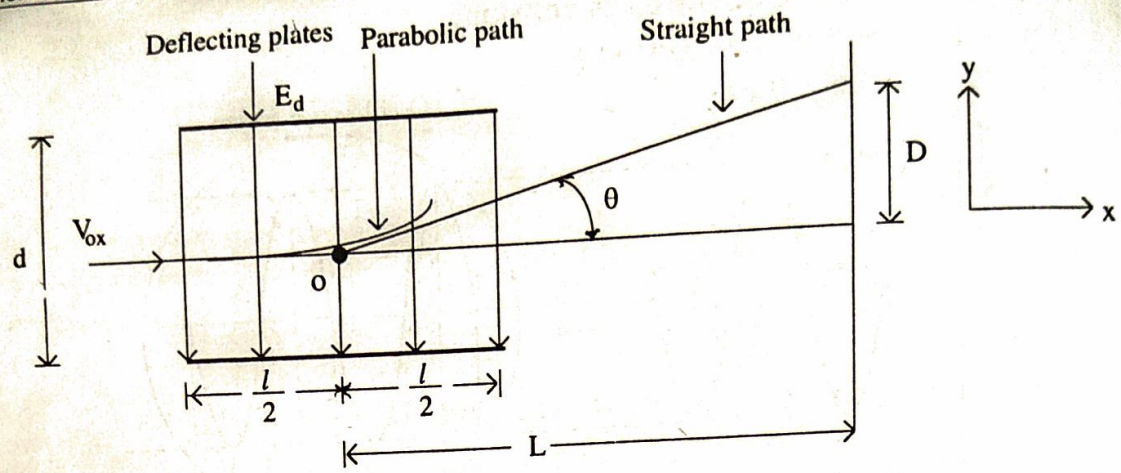

Fig. 5.3 Electrostatic deflection in CRT

Let,

E_a = Voltage of pre-accelerating anode.

m = Mass of electron

V_{ox} = Velocity of the electron entering the deflecting plates

l = length of the deflecting plates

L = Distance between centre of deflecting plates and screen.

d = Distance between deflecting plates

E_d = Voltage between plates.

D = Deflection of electron beam on the screen in Y direction.

e = Change on electron.

Loss in Potential energy of the electron is = eE_a ... (1)

Thus loss in potential energy is converted into kinetic energy.

Kinetic energy of electron is = $\frac{1}{2} mV_{ox}^2$ ... (2)

Electric field intensity in the y direction = $E_y = \frac{E_d}{d}$ ... (3)

Force on the electron in the y direction = $F_y = eE_y = \frac{eE_d}{d}$ ... (4)

$F_y = m\,a_y$ where a_y is acceleration

$$\therefore \quad a_y = \frac{eE_y}{m} \qquad \text{... (5)}$$

As the initial velocity is zero the displacement y at any instant in Y direction is

$$y = \frac{1}{2} a_y t^2 = \frac{1}{2} \frac{eE_y t^2}{m} \qquad \text{... (6)}$$

The velocity in the x direction is constant

∴ distance travelled in X direction is

Distance = Speed × Time

$$\therefore \quad x = V_{ox} \times t \qquad \ldots (7)$$

$$t = \frac{x}{V_{ox}} \qquad \ldots (8)$$

Substituting equation (8) in equation (6) we get

$$y = \frac{1}{2}\frac{eE_y}{m} \times \left(\frac{x}{V_{ox}}\right)^2 \qquad \ldots (9)$$

Differentiating equation (9) we get the slope at any point (x,y)

$$\therefore \quad \frac{dy}{dx} = \frac{eE_y x}{mV_{ox}^2} \qquad \ldots (10)$$

Putting x = l in equation (10) we get the value of tan θ

$$\tan\theta = \frac{eE_y\, l}{mV_{ox}^2} = \frac{eE_d\, l}{mdV_{ox}^2} \qquad \ldots (11)$$

The deflection D on the screen is given by

$$D = L\tan\theta = \frac{LeE_d l}{mdV_{ox}^2} = \frac{Ll\,E_d}{2dE_a} \qquad \ldots (12)$$

From equation (12) we see the deflection on the screen is

(a) It is directly proportional to the deflecting voltage E_d.

(b) It is independent of $\frac{e}{m}$ ratio.

Deflection sensitivity : It is defined as the deflection on the screen per unit deflection voltage. Deflection factor is defined as the reciprocal of deflection sensitivity.

$$\text{Deflection sensitivity} = S = \frac{D}{E_d} = \frac{Ll}{2dE_a} \qquad \ldots (13)$$

$$\text{Deflection factor} = G = \frac{1}{S} = \frac{2dE_a}{Ll} \qquad \ldots (14)$$

Example 1 : *The distance between the deflecting plates in a CRT is 1 cm, the length of the deflecting plates is 4.5 cm. The accelerating supply voltage is 300 volt and the distance of the screen from the centre of the deflecting plates is 33 cm. calculate the deflecting sensitivity of the tube.*

Solution :

L = 33 cm, l = 4.5 cm, d = 1 cm, E_a = 300V

Deflection sensitivity is given by,

$$S = \frac{D}{E_d}$$

$$= \frac{Ll}{2dE_a}$$

$$\therefore \quad S = \frac{0.33 \times 0.045}{2 \times 0.01 \times 300} = 2.48 \text{ mm/V}$$

$$\boxed{\text{Deflection sensitivity} = S = 2.48 \text{ mm/V}}.$$

Example 2 : *Calculate the maximum velocity of the beam of electrons having a cathode voltage of 1000V. Assume that the electrons leave the cathode with zero velocity.*

Solution :

We have

$$E_a = 1000V, m = 9.1 \times 10^{-31} \text{ Kg}$$

$$e = 1.6 \times 10^{-19}C, V = ?$$

$$\frac{1}{2} mV^2 = eE_a$$

$$\therefore V = \sqrt{\frac{2eE_a}{m}}$$

$$= \sqrt{\frac{2 \times 1.6 \times 10^{-19} \times 1000}{9.1 \times 10^{-31}}}$$

$$V = 18.75 \times 10^6 \text{ m/s.}$$

Example 3 : *In an CRT the anode voltage is 1000V and deflecting plates are 1.5 cm long and placed 5 mm apart. If the distance of screen from the centre of deflecting plates is 50 cm. Find*

(a) The velocity of electron beam

(b) The deflection sensitivity of tube

(c) The deflection factor of tube.

Solution :

We have $E_a = 1000V$, $l = 1.5$ cm, $d = 5$ mm, $L = 50$ cm, $V = ?$, $S = ?$, $G = ?$

We have $\frac{1}{2} mV^2 = eE_a$

$$\therefore V = \sqrt{\frac{2eE_a}{m}}$$

$$= \sqrt{\frac{2 \times 1.6 \times 10^{-19} \times 1000}{9.1 \times 10^{-31}}}$$

$$V = 18.75 \times 10^6 \text{ m/s.}$$

$$\text{Deflection sensitivity} = S = \frac{Ll}{2dE_a}$$

$$S = \frac{50 \times 10^{-2} \times 1.5 \times 10^{-2}}{2 \times 5 \times 10^{-3} \times 1000}$$

$$\therefore S = 0.75 \text{ mm/V}$$

$$\text{Deflection factor} = G = \frac{1}{S} = \frac{1}{0.75} = 1.33 \text{ V/mm.}$$

Example 4 : *A CRT has a anode voltage of 1000V and deflecting plates are 1.5 cm long and placed 5 mm apart. If the distance of screen from the centre of deflecting plates is 50 cm. Find the input voltage required to deflect the beam through 3 cm. The input voltage is applied to the deflecting plates through amplifier having overall gain of 100.*

Solution :

$$D = \frac{Ll\,E_d}{2dE_a}$$

$$\therefore \quad E_d = \frac{2dE_aD}{Ll}$$

$$= \frac{2 \times 5 \times 10^{-3} \times 1000 \times 3 \times 10^{-2}}{50 \times 10^{-2} \times 1.5 \times 10^{-2}}$$

$$= 40 \text{ V}$$

$\therefore$ input voltage required for deflection of 3 cm $= \dfrac{Ed}{\text{gain}} = \dfrac{40}{100} = 0.4$ V.

Example 5 : *In the Lissajous pattern shown below find the phase difference.*

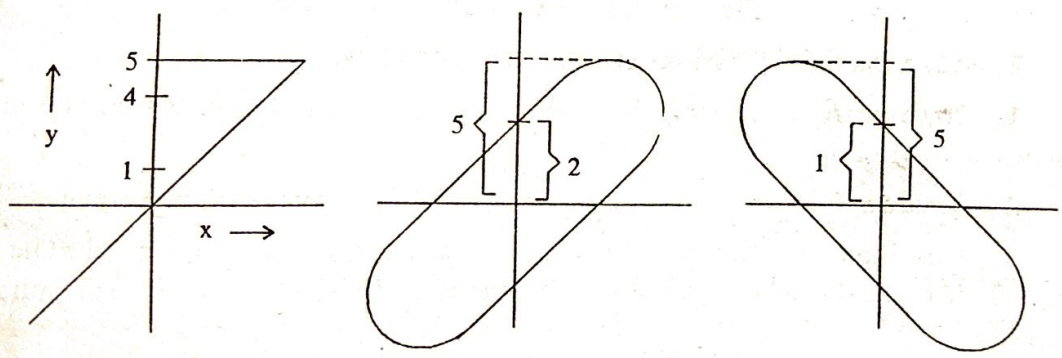

(a) (b) (c)

Solution :

In Fig. (a)

$$\sin\theta = \frac{y_1}{y_2} = \frac{0}{5} = 0 \quad \therefore \theta = 0^\circ$$

In Fig. (b)

$$\sin\theta = \frac{y_1}{y_2} = \frac{2}{5} \quad \therefore \theta = 23.57^\circ$$

In Fig. (c)

$$\sin\theta = \frac{y_1}{y_2} = \frac{1}{5} \quad \therefore \theta = 180 - \sin^{-1}\left(\frac{1}{5}\right) = 168.46^\circ$$

(As the major axis is in 2nd and 4th quadrant).

5.3 FRONT PANEL OF OSCILLOSCOPE

The front panel of oscilloscope consists of screen for displaying the waveform and knobs/switches for controlling the displayed waveform.

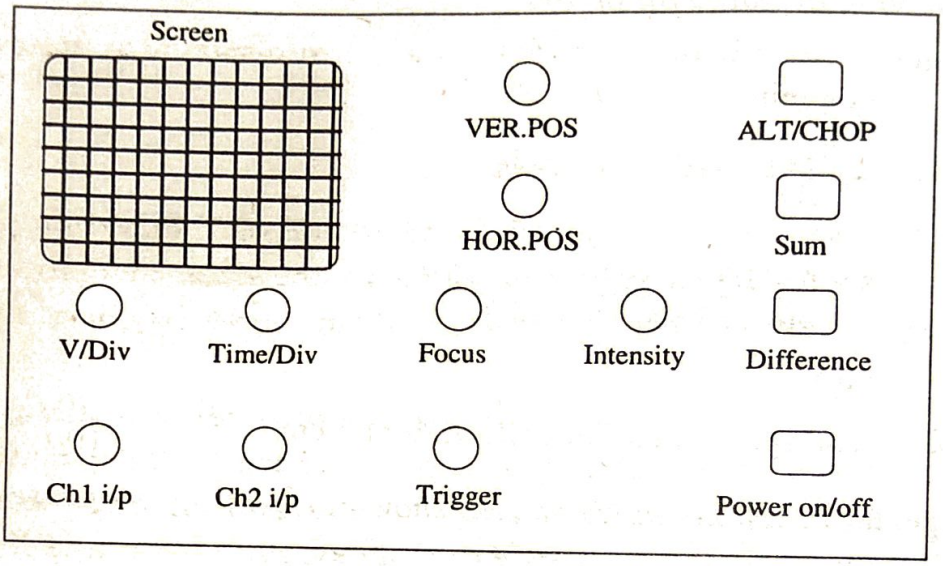

Fig. 5.4 Front panel of oscilloscope

The functions of the various switches are as follows :

1. **Power on/off :** The supply to the oscilloscope can be turned on and off by using this switch.

2. **Screen :** The waveforms to be analysed is displayed on the screen.

3. **Ch1 input, Ch2 input :** At a time two signals can be analyzed. The first signal to be analyzed is applied to Ch1 input and the other signal is applied to Ch2.

4. **Intensity :** Using this knob we can adjust the intensity of the waveform.

5. **Focus :** Using this knob we can adjust the focus of the screen.

6. **V/Div :** By using this knob we can magnify the waveform in vertical direction.

7. **Time/Div :** By using this knob we can magnify the waveform in horizontal direction.

8. **Ver Pos :** By using this knob we can shift the waveform in vertical direction.

9. **Hor Pos :** By using this knob we can shift the waveform in horizontal direction.

10. **Trigger :** This knob is used for examination of transients.

11. **Alt mode :** In this mode different inputs are fetched for one cycle of horizontal sweep and displayed on the screen.

12. Chop mode : In this mode inputs are fetched with electronic switch which is operated at frequency higher than horizontal sweep rate and then the chopped signals are displayed on screen.

13. Sum : In this mode resultant waveform displayed is addition of Ch1 input and Ch2 input.

14. Difference : In this mode resultant waveform displayed is subtraction of Ch1 input and Ch2 input.

5.4 VERTICAL DEFLECTION SYSTEM

The signal to be analyzed is applied to the vertical or Y deflection plates and function of vertical deflection system is to amplify the signal to a proper level in order to drive the vertical deflection system without introducing distortion in the system.

It consists of an attenuator usually a compensated attenuator is used Attenuator is followed by amplifier. The response of the amplifier must be wide enough to pass faithfully the entire band of frequencies which are to be measured. The vertical amplifier output is applied to the synchronizing amplifier which permits the horizontal sweep circuit to be triggered by the signal under analysis.

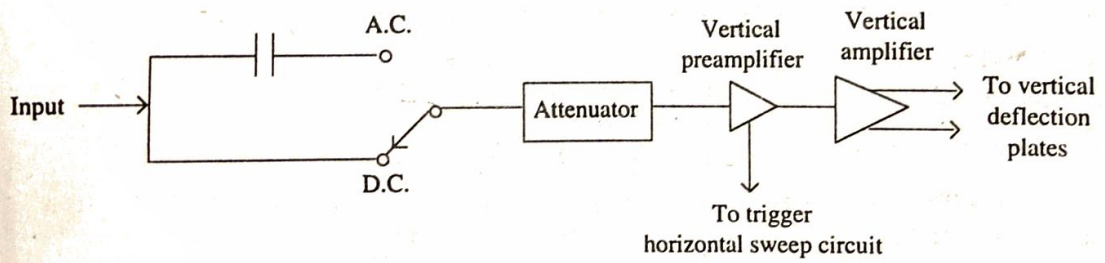

Fig. 5.5 Vertical deflection system of oscilloscope

5.5 HORIZONTAL DEFLECTION SYSTEM

It consists of a trigger circuit, time base generator and horizontal amplifier. The purpose of the trigger circuit is for synchronization. It sees that the horizontal sweep starts at the same point as that of the vertical input signal. The time base generator controls the rate at which the beam is scanned.

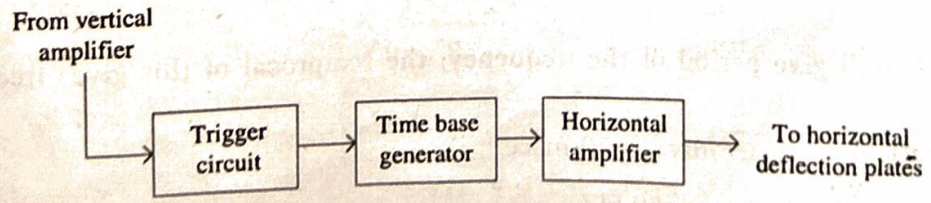

Fig. 5.6 Horizontal deflection system of oscilloscope

The horizontal amplifier is used to increase the amplitude of the signals generated by sweep generator to drive horizontal plates. The gain of horizontal amplifier is larger than vertical amplifier because the horizontal deflection sensitivity is smaller than vertical deflection sensitivity. The amplifier includes a phase invertor which produces two simultaneous output waveform, a positive going sawtooth is applied to one plate and negative going to another place so that beam is swept across the CRT screen from left to right.

5.6 APPLICATION OF OSCILLOSCOPES

1. Measurement of voltage and current : It is used for measurement of voltages and currents. It can also be used for measurement of pressure, temperature etc. by converting these quantities into voltages by the use of suitable transducers. The rms value can also be determined by dividing the peak to peak voltage by $2\sqrt{2}$. The value of current can be determined by measuring the voltage across known resistance connected in the circuit.

2. Determining frequency : It is the most useful instrument for frequency measurement. Any high frequency A.C signal can be measured with better accuracy.

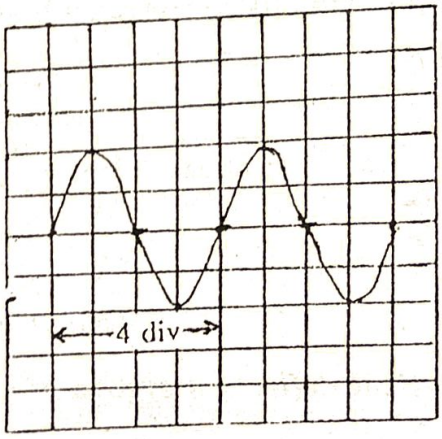

Fig. 5.7

Method 1 :

(a) Apply the unknown frequency to Y–input.

(b) Adjust the waveform on the screen so that it will show one or two cycles.

(c) Measure the number of division on X–axis and multiply this by Time/Div scale.

(d) It will give period of the frequency, the reciprocal of this gives frequency of input.

$$4 \text{ Div} \times 5 \text{ msec/div} = 20 \text{ msec}$$

$$F = \frac{1}{20} \text{ msec} = 50 \text{ HZ}$$

Method 2 : Lissajous pattern may be used for measurement of frequency. The signal whose frequency is to be measured is applied to Y plates and an accurate standard calibrated oscillator is applied to X plate. The frequency of unknown signal is calculated by measuring no. of tangencies on horizontal and vertical lines.

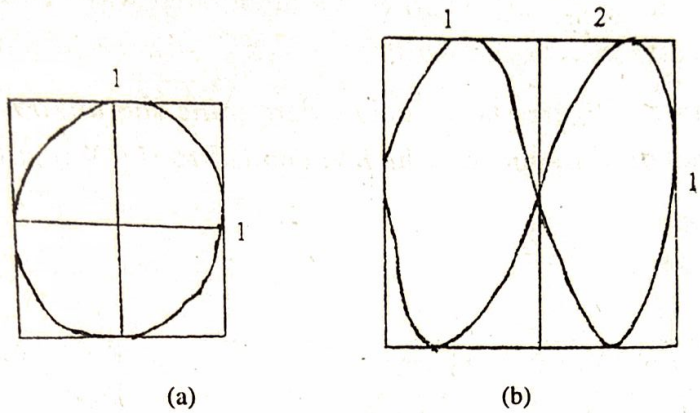

Fig. 5.8

F_y = related to frequency of unknown signal.

F_x = related to frequency of standard oscillator.

The ratio $\frac{F_x}{F_y}$ gives frequency of unknown signal.

For Fig. (a), $\frac{F_x}{F_y} = \frac{1}{1}$

∴ unknown frequency = Standard frequency

For Fig. (b),

$$\frac{F_y}{F_x} = \frac{\text{No. of horizontal tangencies}}{\text{No. of vertical tangencies}}$$

x axis / y axis

$$\therefore \frac{F_y}{F_x} = \frac{2}{1}$$

∴ Unknown frequency = 2 × standard frequency

3. Phase Measurement : The phase difference between two sine waves can be calculated by applying one wave to X plate and other to Y plate. The resulting pattern should be ellipse. The ratio $\frac{y_1}{y_2}$ gives sin θ.

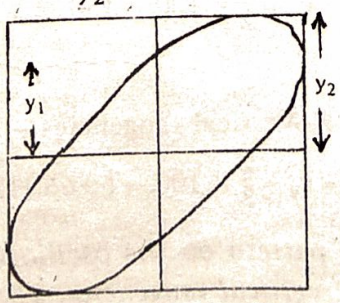

Fig. 5.9

$$\sin\theta = \frac{y_1}{y_2} \text{ if } \frac{y_1}{y_2} = 0.5 \text{ then } \theta = 30^o$$

4. Determination of modulation index : It is useful in communication purposes. In amplitude modulation we can determine the modulation index of the modulated wave and determine whether the modulated wave is under–modulated or over–modulated.

Example 1 : *In the figure shown below determine the unknown frequency in each case. The standard frequency which is applied to the X input is 100 HZ.*

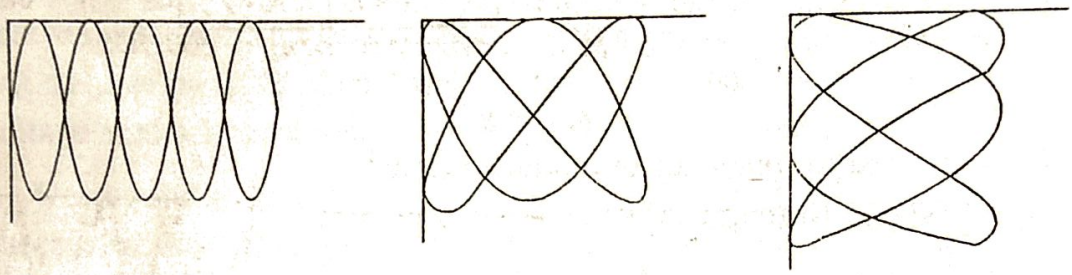

(a) (b) (c)

Solution :

In Fig. (a)

Horizontal tangencies = 5, vertical tangencies = 1

$$\therefore \frac{F_y}{F_x} = \frac{\text{Horizontal tangencies}}{\text{Vertical tangencies}}$$

$$F_y = \text{Unknown frequency} = \frac{5}{1} \times 100 = 500 \text{ HZ}$$

In Fig. (b)

Horizontal tangencies = 3, Vertical tangencies = 2

$$\therefore \text{ Unknown frequency} = F_y = \frac{3}{2} \times 100 = 150 \text{ HZ}$$

In Fig. (c)

Horizontal tangencies = 2, Vertical tangencies = 3

$$\therefore \text{ Unknown frequency} = F_y = \frac{2}{3} \times 100 = 66.66 \text{ HZ}$$

Example 2 : *A lissajous pattern on the oscilloscope is stationery and has 5 horizontal tangencies and 2 vertical tangencies. The frequency of the horizontal input is 2000 HZ. Determine the frequency of the vertical input.*

Solution :

Horizontal tangencies = 5

Vertical tangencies = 2

Horizontal input frequency = 2000 HZ

$$\therefore \frac{\text{Unknown frequency}}{\text{Horizontal frequency}} = \frac{F_y}{F_x} = \frac{\text{Horizontal tangencies}}{\text{Vertical tangencies}}$$

$$\frac{F_y}{F_x} = \frac{5}{2}$$

$$\therefore F_y = \frac{5}{2} \times 2000 = 5 \text{ KHZ}$$

Vertical input frequency = F_y = 5 KHZ.

Example 3 : *In the lissajous pattern shown below find the unknown frequency if the frequency applied to the horizontal input is 200 HZ.*

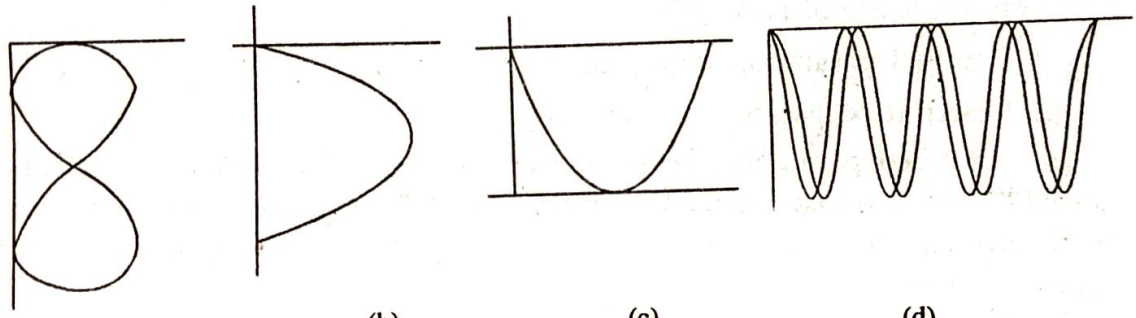

(a) (b) (c) (d)

Solution :

In Fig. (a)

Horizontal tangencies = 1

Vertical tangencies = 2

$$\therefore \text{Unknown frequency} = F_y = \frac{1}{2} \times 200 = 100 \text{ HZ}$$

In Fig. (b)

Horizontal tangencies = 1

Vertical tangencies = 2

$$\therefore \text{Unknown frequency} = F_y = \frac{1}{2} \times 200 = 100 \text{ HZ}$$

In Fig. (c)

Horizontal tangencies = 2

Vertical tangencies = 1

$$\therefore \text{Unknown frequency} = F_y = \frac{2}{1} \times 200 = 400 \text{ HZ}$$

In Fig. (d)

Horizontal tangencies = 8

Vertical tangencies = 1

$\therefore$ Unknown frequency $= F_y = \frac{8}{1} \times 200 = 1.6$ KHZ.

5.7 DELAY LINE

The electronic circuit present in the oscilloscope causes a certain amount of time delay in transmitting signal voltages to the deflection plates. Signal processing in the horizontal channel consists of generating and shaping the trigger pulse that starts the sweep generator the output of which is fed to horizontal amplifier. The whole process takes upto 80 ns, so in order to enable the user to observe the leading edge of the waveform under analyzis the signal drive for the vertical CRT plates must be delayed by the same amount. The delay line can be introduced anywhere but it should be introduced only after the trigger pick off.

Delay lines are of two types :

(a) Lumped parameter delay line

(b) Distributed parameter delay line

(a) Lumped parameter delay line : It consists of a number of T sections (LC sections) which are cascaded. The property of T section is, if it is terminated in its characteristic impedance Z_0 then the impedance by looking back into the input terminals is also Z_0.

The cut off frequency of the filter is given by

$$F_c = \frac{1}{\pi\sqrt{LC}}$$

If the input to the filter is much less than cut off frequency than the output will be a faithful reproduction of the input but it will be delayed by a time

$$t_s = \frac{1}{\pi F_c} = \sqrt{LC}$$

If the total number of sections is n then the delay introduced is

$$t_d = nt_s$$

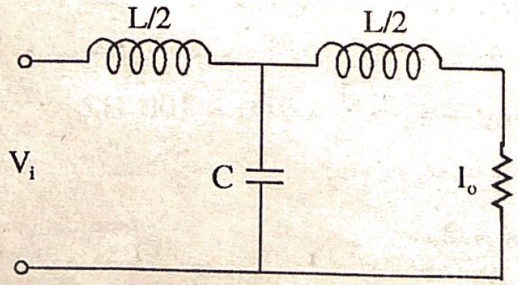

Fig. 5.10 Lumped parameter delay line

(b) Distributed parameter delay line : It consists of specially manufactured coaxial cable with high value of inductance per unit length. The straight center conductor of normal coaxial cable is replaced with a continuous coil of wire wound in form of helix on flexible inner core. To reduce eddy currents the outer conductor is made of braided insulated wire.

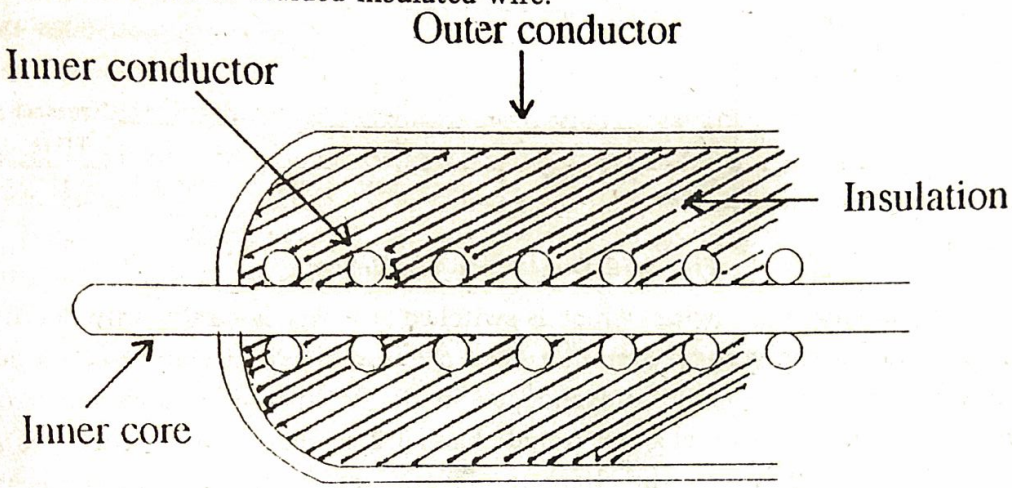

Fig. 5.11 High impedance delay line

5.8 SINGLE BEAM, MULTI BEAM AND MULTI TRACE OSCILLOSCOPE

An oscilloscope having single electron beam is called single beam oscilloscope. It is used to view or measure frequency and current of single waveform at a time.

An oscilloscope having more than one electron beam is called as a multi beam oscilloscope. Actual beam oscilloscope has two beams. It can be used as a single beam and it can measure phase difference, frequency difference between two or more waveforms at a time. The time base is usually common.

In multi trace oscilloscope, the oscilloscope uses a single electron gun and produces multiple traces by switching the Y deflection plates from one input signal to another. The eyes interpret this as a continuous display although it is a sampled display. It is less expensive.

5.9 DUAL TRACE OSCILLOSCOPE

There are two separate vertical input channels channel A and channel B. There is a separate Attenuator and Preamplifier due to which amplitude of each input viewed on the oscilloscope can be controlled individually.

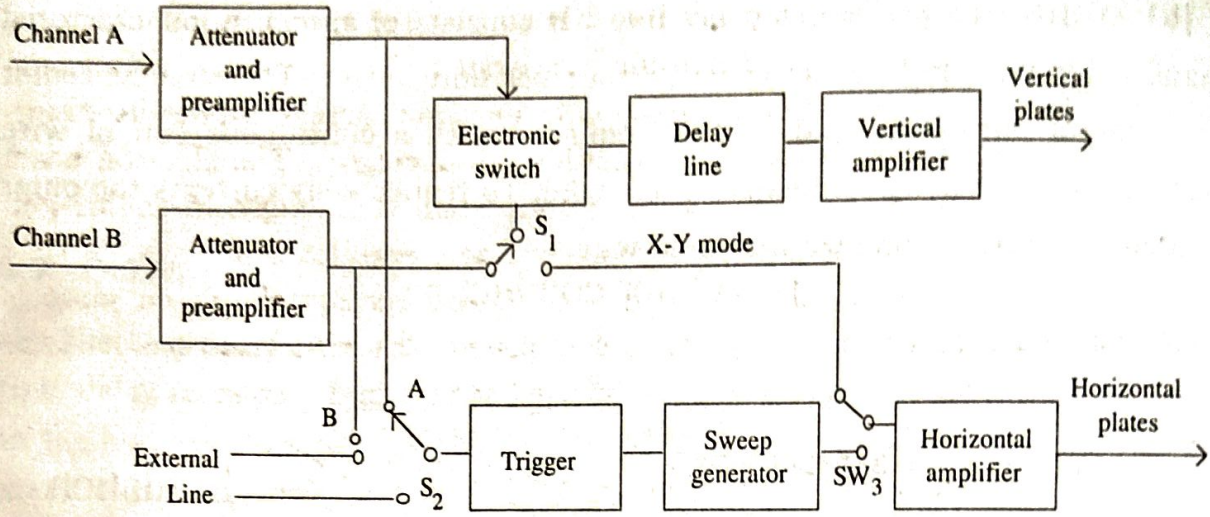

Fig. 5.12 Dual trace oscilloscope

Using an electronic switch which is switched at a very fast rate, only one input is passed on to the vertical amplifier. The electronic switch can be operated in two ways. Alternate mode and chopped mode. In alternate mode electronic switch switches between channel A and channel B so that each channel gets one cycle of horizontal sweep. The alternate mode is not suitable for displaying very low frequencies. In chopped mode the switch runs at a very high frequency between the two channels because of which small segments from both the channels are connected alternately to the vertical amplifier. The display shows a continuous line as the chopping rate is very much fast.

5.10 DUAL BEAM OSCILLOSCOPE

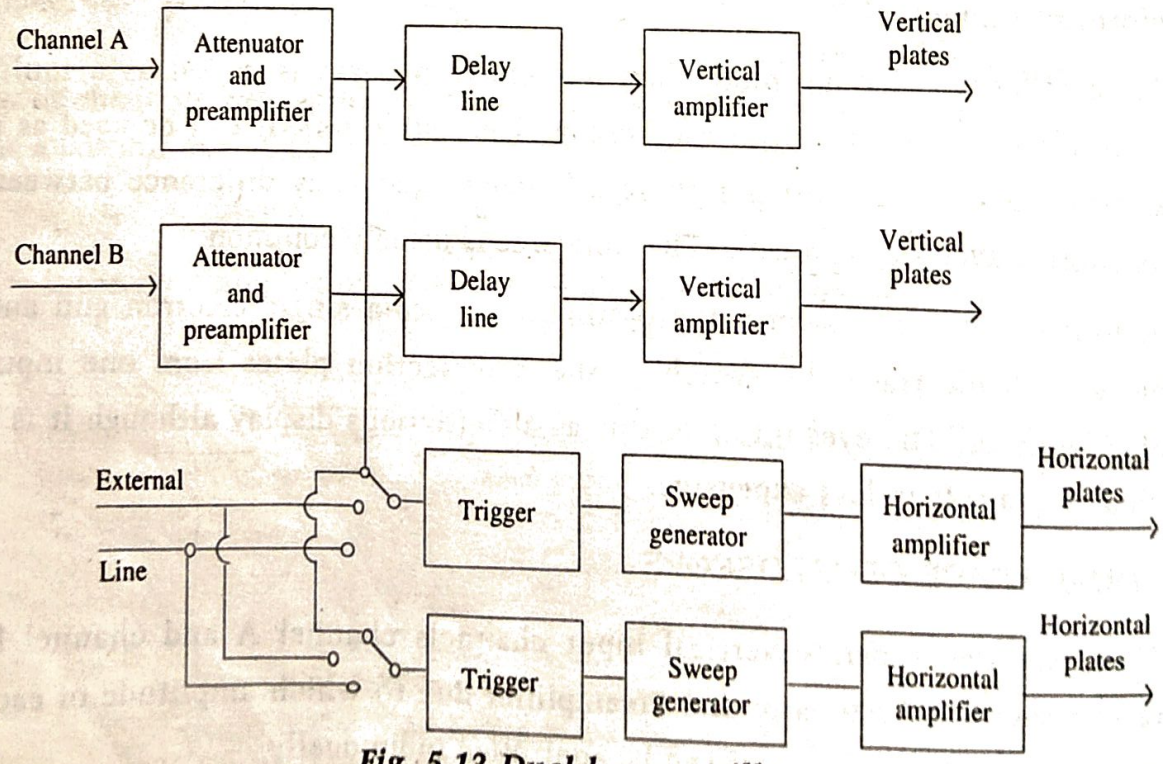

Fig. 5.13 Dual beam oscilloscope

It has two separate electron beams, that is two separate vertical channels. The two channels have independent time base system. The advantage of independent time base is it allows different sweep rates for two channels but the disadvantage is that the weight and size of the oscilloscope increases. The electron beam is generated by using a double gun tube or split beam technology. In double gun tube, the brightness and focus of each beam can be controlled separately. In split beam technology, a single electron gun is used and horizontal splitter plate is placed between the last anode and deflection plates. The split beam has half the brightness of a single beam so it cannot be used at very high frequency.

5.11 SAMPLING OSCILLOSCOPE

Necessity : The ordinary oscilloscopes can be used in 50–300 MHZ range, as the frequency of vertical deflection signal increases the writing speed of the electron beam increases resulting a reduction in image brilliance. The same brilliance can be achieved by increasing the velocity of the electron beam. Deflection Potential also increases thus putting greater demands on the vertical amplifier.

So for high frequencies the sampling oscilloscope is used. It uses sampling techniques and the sampling oscilloscope is able to respond and store rapid bits of information and present them in a continuous display.

Principle : In a sampling oscilloscope, the input waveform is reconstructed from many samples which are taken of the input waveform. During the reconstruction process, the sampling pulse turns the sampling circuit on for an extremely short time interval, the waveform voltage at that instant is measured. The spot on the CRT is moved horizontally over short distance and is positioned to the new value of input voltage.

Working : Fig. 5.14 shows the sampling circuit which is used in a sampling oscilloscope.

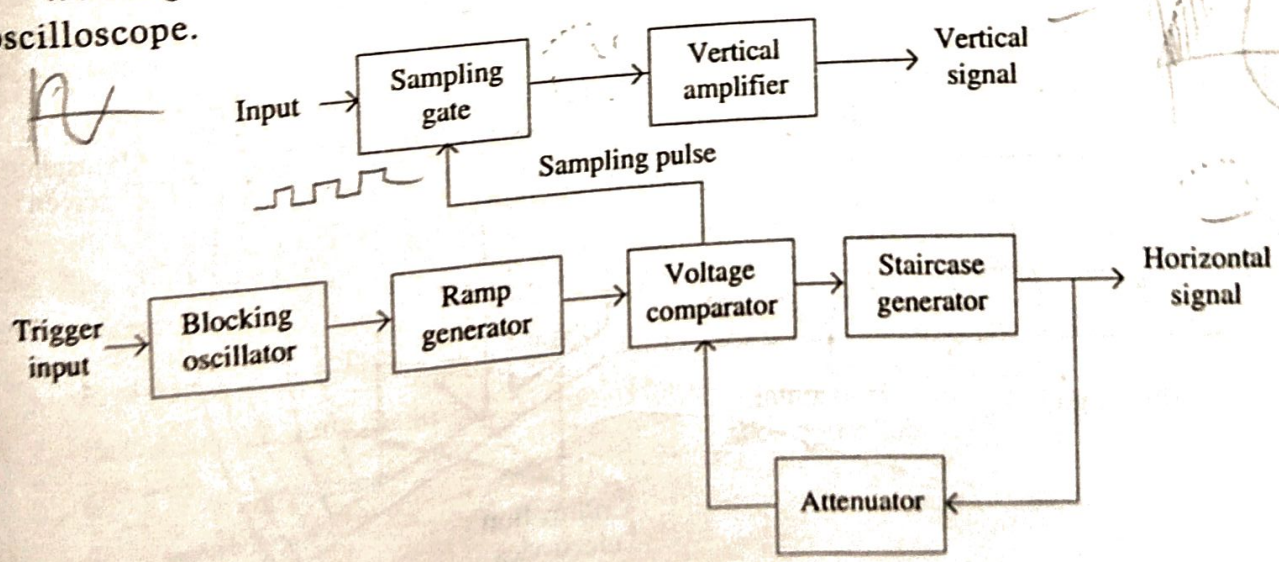

Fig. 5.14 Sampling circuit

The input waveform of very high frequency is applied to the sampling gate. The diodes which are present in the sampling gate are forward biased by the sampling pulse. During this period the capacitances are slightly charged towards the voltage level of the input circuit. This capacitor voltage is amplified by the vertical amplifier and applied to the vertical deflection plates. A part of vertical amplifier output is used to trigger the Blocking oscillator. The blocking oscillator uses Avalanche transistors. The blocking oscillator on receiving a trigger pulse starts a ramp generator which is applied to a voltage comparator. The other output to the voltage comparator comes from staircase generator. When the two voltages at the input of voltage comparator become equal, a sampling pulse is applied to the sampling gate. On receiving a sampling pulse again the sample of the input voltage is taken, amplified and applied to the vertical deflection plates.

The resolution of the image on the CRT screen depends upon the stepsize of the staircase generator.

5.12 STORAGE OSCILLOSCOPE

Necessity : In the conventional CRT the persistence of the phosphor is in the range millisecond to second because of this an event which occurs once will disappear in a short period of time.

The storage oscilloscope is used for this purpose, it finds application in mechanical and biomedical fields.

The storage oscilloscopes are capable of retaining image on the screen for sometime even after the input has changed.

Principle : Storage CRTs are of two types, bistable tubes and halftone tubes. Storage CRT uses the phenomenon of secondary electron emission to build up and store electrostatic charge on the surface of an insulated target.

Construction and Working : It is capable of writing, storing and erasing a image.

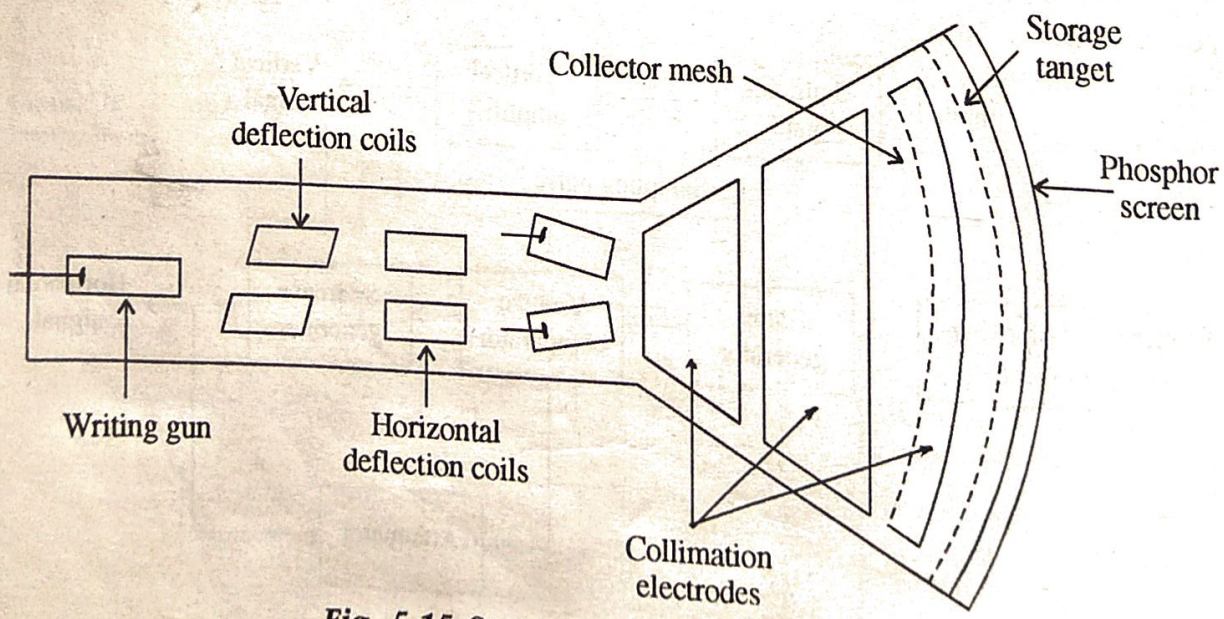

Fig. 5.15 Storage type CRT (Bistable)

The storage target mounted behind the phosphor screen is a conductive mesh which is covered with a highly resistive coating of magnesium fluoride. The write gun gives a narrow focussed beam and is used for writing the information to be stored. The second electron gun is called the flood gun, it emits low velocity primary electrons that flood the entire area. The flood gun floods the target at all time. The write gun etches a positively changed pattern on the storage target by knocking off secondary emission electrons. Magnesium fluoride has excellent insulating properties because of which the positively charged pattern remains exactly in the same position on the storage target where it was first deposited.

The storage pattern can be viewed later by making use of flood guns. When the flood guns are switched on, they emit low velocity electrons over large area on the entire screen. Majority of the flood electrons are collected by the collector mesh and therefore they never reach the phosphor screen. In the area near the stored positive charge on the storage target, some of the flood electrons are attracted by the positive field and these electrons continue to bombard the phosphor because of which the CRT display will be an exact replica of the pattern which was initially stored on the target and the display will be on, as long as the flood guns are on. The stored pattern can be erased by applying a negative voltage to the storage target.

Sampling oscilloscope	Storage oscilloscope
1. It takes samples at different portion of the waveform and display them as continuous wave on screen.	1. They are capable of retaining the image on the screen for sometime after the input has changed.
2. It is used to examine very fast signals.	2. It is used to examine very low frequency signals.

QUESTIONS • 5

1. Explain basic construction of oscilloscope.
2. Define the following terms :
   (a) Phosphorescence
   (b) Persistence
   (c) Luminance.

3. In a CRT derive the expression for the deflection produced on the screen and prove it is independent of e/m ratio.

4. Explain front panel of oscilloscope with the various controls.

5. Write short notes on :

   (a) Vertical deflection system

   (b) Horizontal deflection system

   (c) Dual trace oscilloscope

   (d) Dual beam oscilloscope

   (e) Sampling oscilloscope

   (f) Storage oscilloscope.

6. What is a delay line, give its necessity and where is the delay line introduced?

7. Explain the operational features of oscilloscopes. Explain in detail block diagram of oscilloscopes?

8. Explain the application of oscilloscopes.

9. Explain the construction of cathode ray tube.

10. State the differences between dual trace CRO and dual beam CRO.

11. Draw block diagram of dual-beam CRO and explain its working.

12. Draw block diagram of general purpose CRO and explain its working.

13. What is storage oscilloscope? On what principle it works? Explain.

14. Explain the working of a storage oscilloscope.

15. Draw block diagram of dual-trace CRO and explain its functioning.

16. Explain how sampling oscilloscope differ from other oscilloscopes.