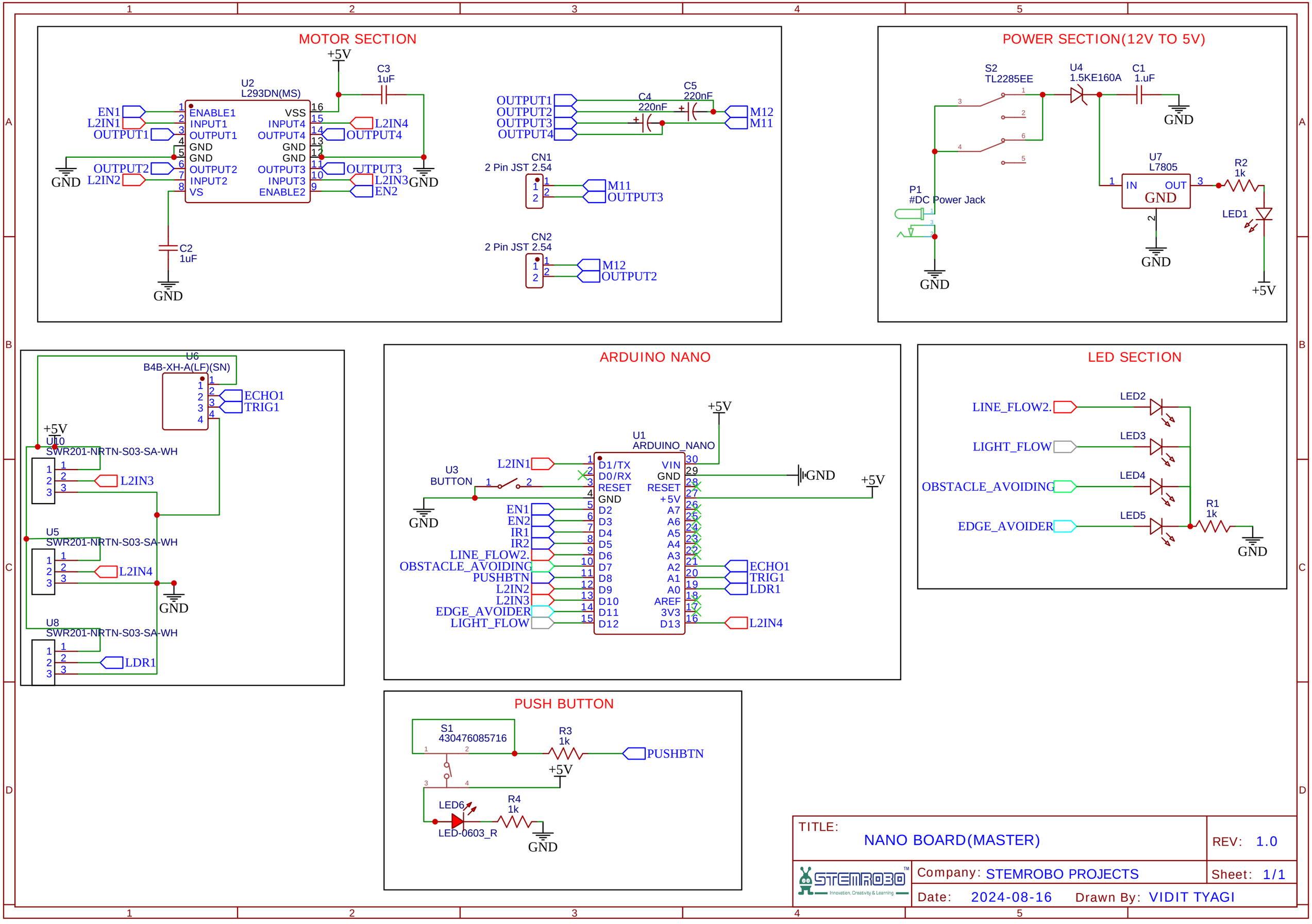

TITLE: NANO BOARD(MASTER)		REV: 1.0
STEMROBO Innovation, Creativity & Learning	Company: STEMROBO PROJECTS	Sheet: 1/1
	Date: 2024-08-16 Drawn By: VIDIT TYAGI	