Locate your nine-digit student identification number in the table below and you will see the circuit schematics that have been assigned to you for Assignment 3. If you are unable to locate your student number below, then you must contact your instructor at robert.collier@scs.carleton.ca, ASAP and no later than Wednesday, October 6th by 11:59pm EST.

100834090	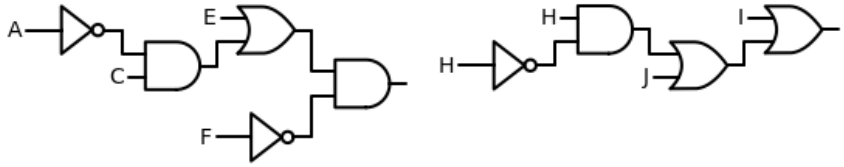
100834699	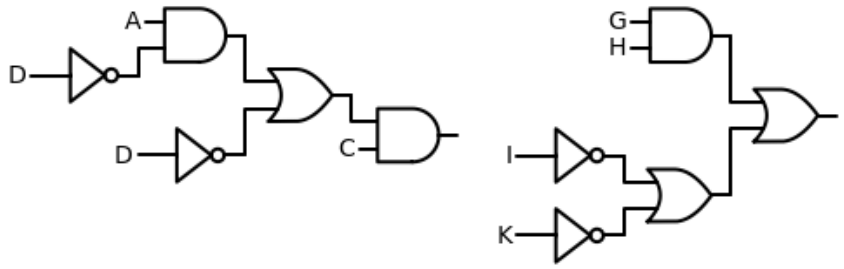
100942358	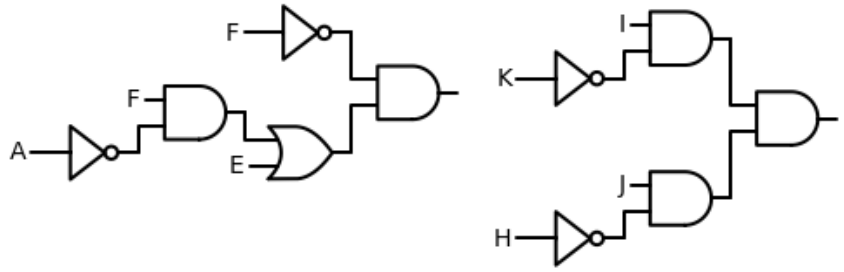
100961704	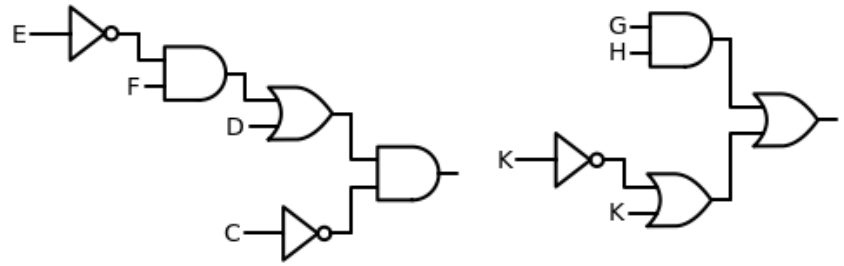
100996906	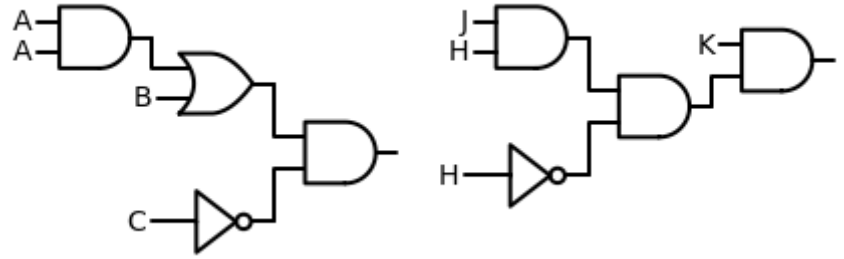

Locate your nine-digit student identification number in the table below and you will see the circuit schematics that have been assigned to you for Assignment 3. If you are unable to locate your student number below, then you must contact your instructor at robert.collier@scs.carleton.ca, ASAP and no later than Wednesday, October 6th by 11:59pm EST.

101000228	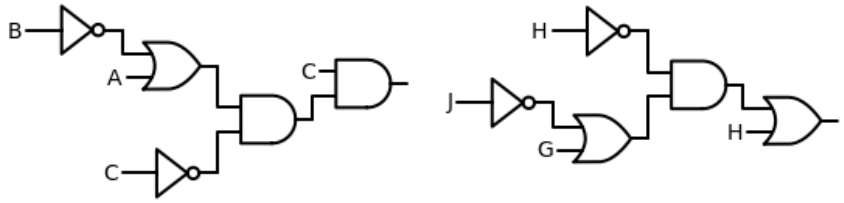
101003878	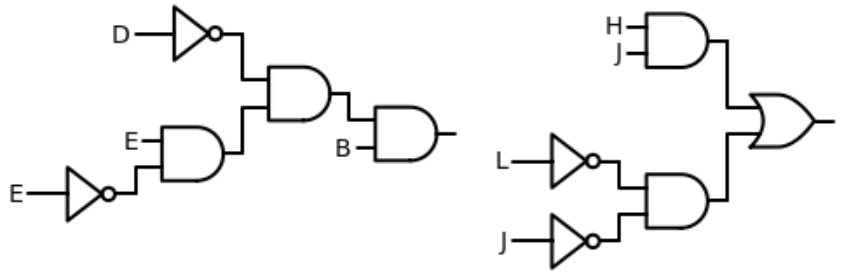
101015691	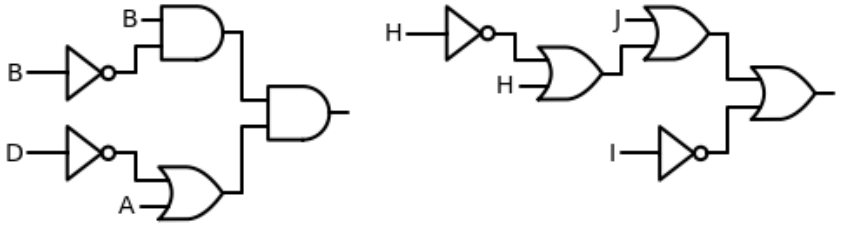
101035886	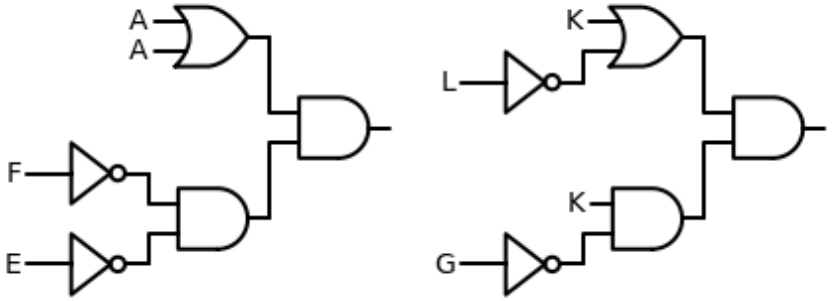
101051190	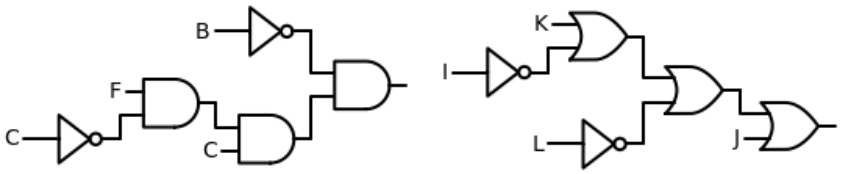

Locate your nine-digit student identification number in the table below and you will see the circuit schematics that have been assigned to you for Assignment 3. If you are unable to locate your student number below, then you must contact your instructor at robert.collier@scs.carleton.ca, ASAP and no later than Wednesday, October 6th by 11:59pm EST.

101054657	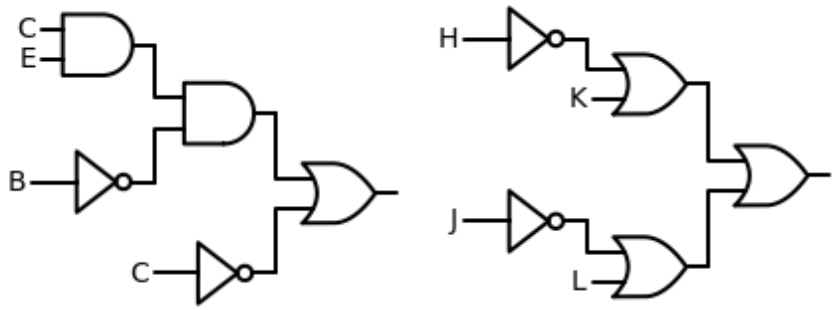
101058799	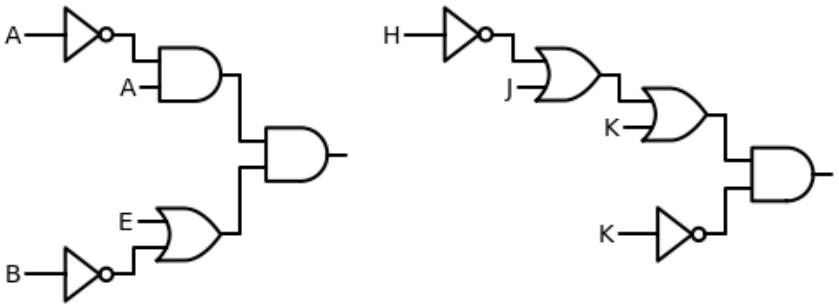
101059937	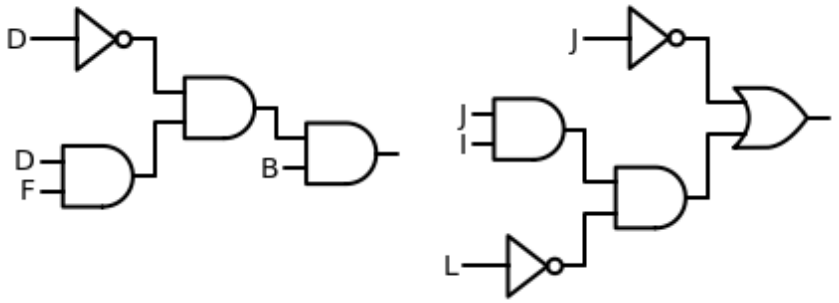
101077243	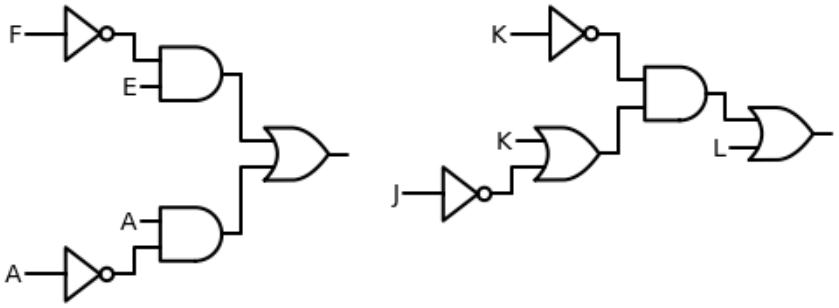

Locate your nine-digit student identification number in the table below and you will see the circuit schematics that have been assigned to you for Assignment 3. If you are unable to locate your student number below, then you must contact your instructor at robert.collier@scs.carleton.ca, ASAP and no later than Wednesday, October 6th by 11:59pm EST.

101082936	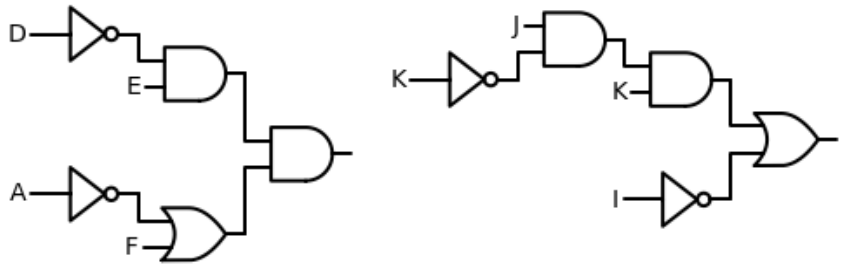
101111179	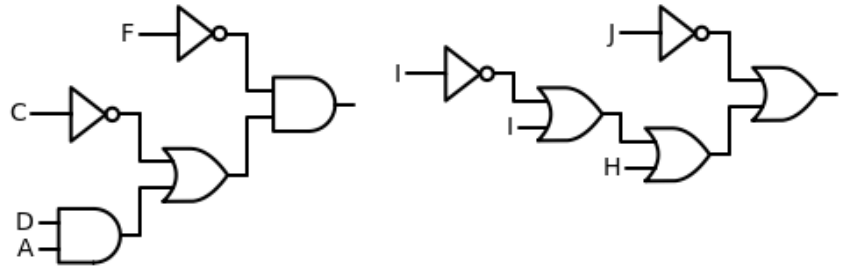
101111722	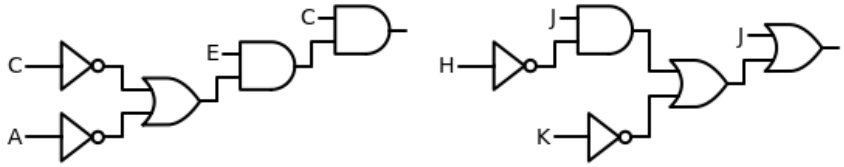
101116564	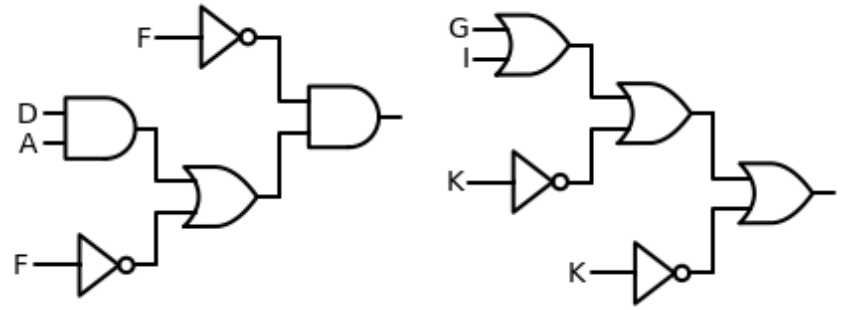

Locate your nine-digit student identification number in the table below and you will see the circuit schematics that have been assigned to you for Assignment 3. If you are unable to locate your student number below, then you must contact your instructor at robert.collier@scs.carleton.ca, ASAP and no later than Wednesday, October 6th by 11:59pm EST.

101118297	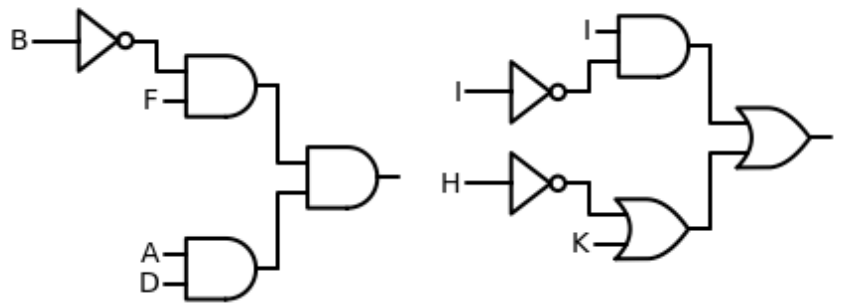
101119345	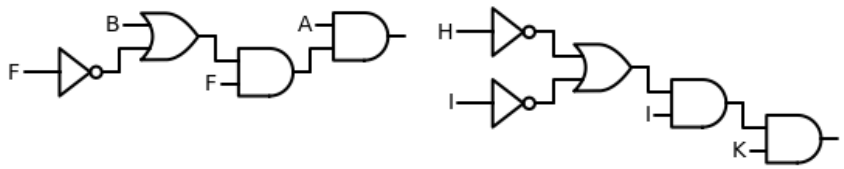
101120642	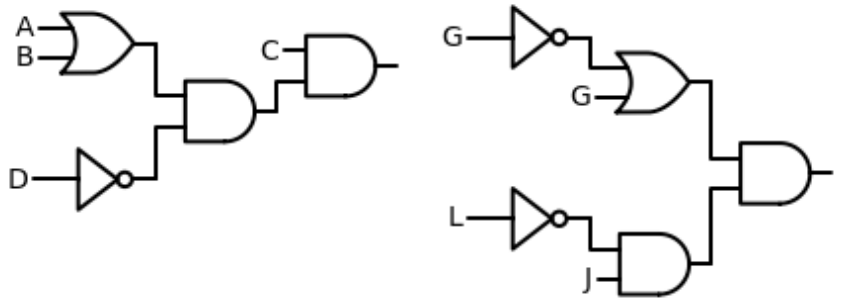
101123402	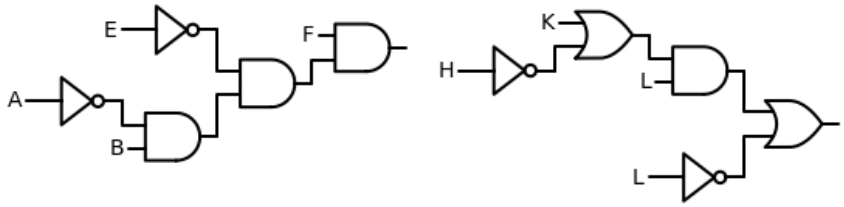
101132837	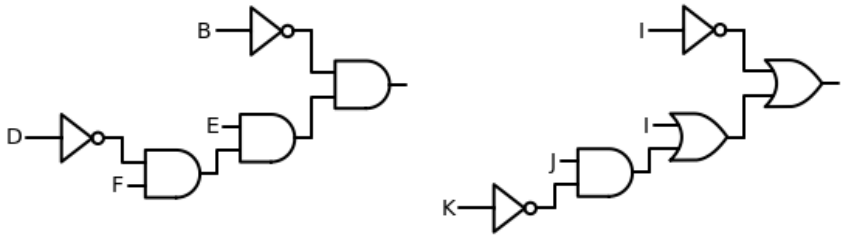

Locate your nine-digit student identification number in the table below and you will see the circuit schematics that have been assigned to you for Assignment 3. If you are unable to locate your student number below, then you must contact your instructor at robert.collier@scs.carleton.ca, ASAP and no later than Wednesday, October 6th by 11:59pm EST.

101137700	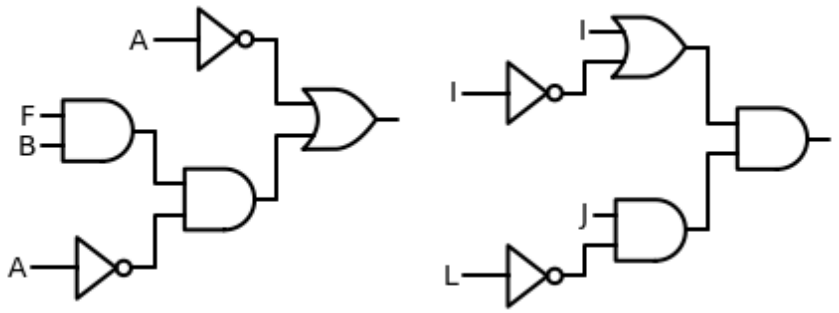
101139648	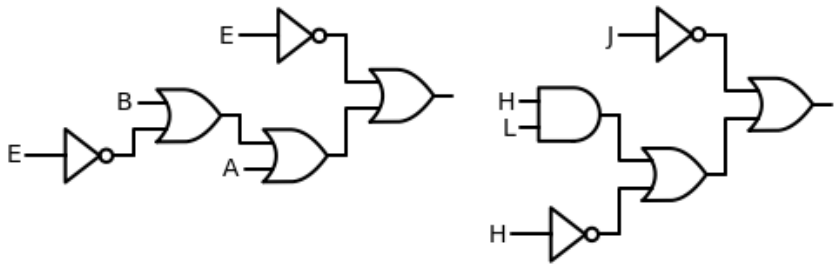
101144751	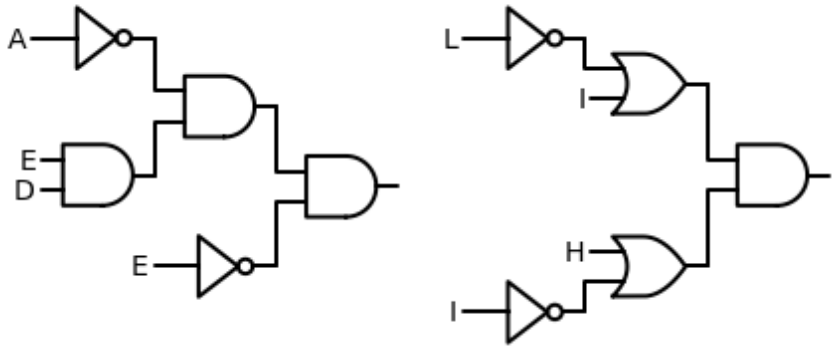
101144807	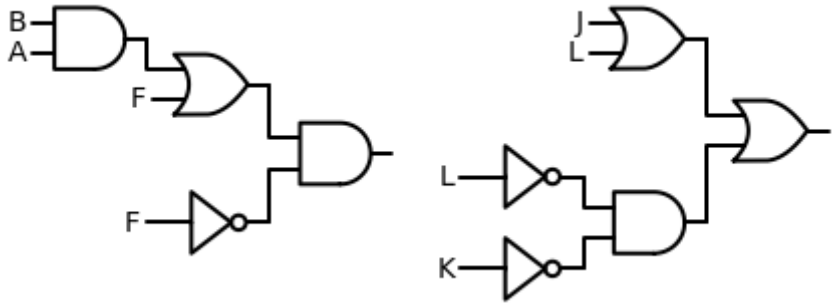

Locate your nine-digit student identification number in the table below and you will see the circuit schematics that have been assigned to you for Assignment 3. If you are unable to locate your student number below, then you must contact your instructor at robert.collier@scs.carleton.ca, ASAP and no later than Wednesday, October 6th by 11:59pm EST.

101147634	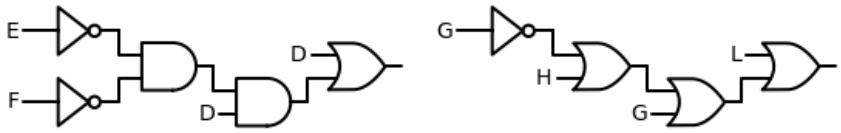
101150213	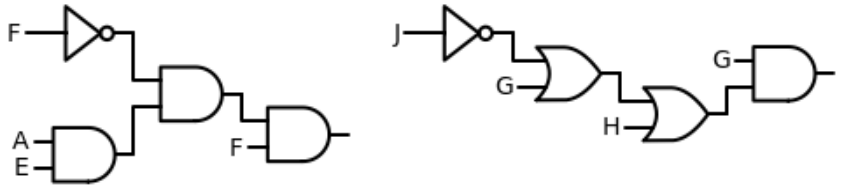
101154304	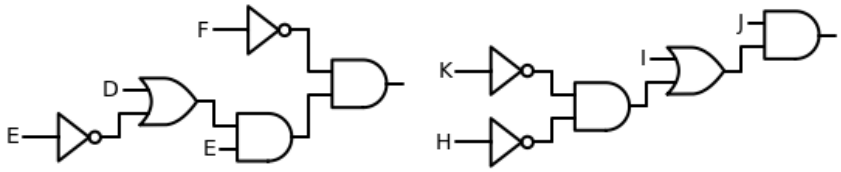
101154497	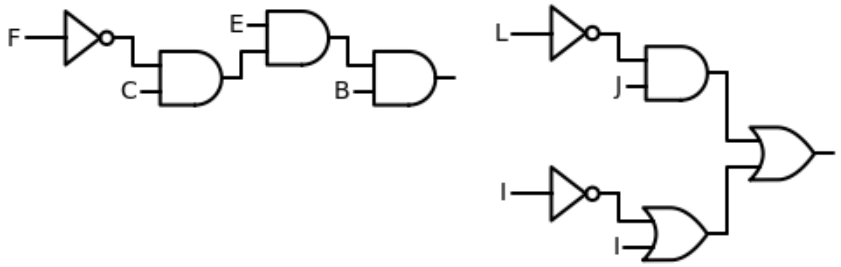
101154811	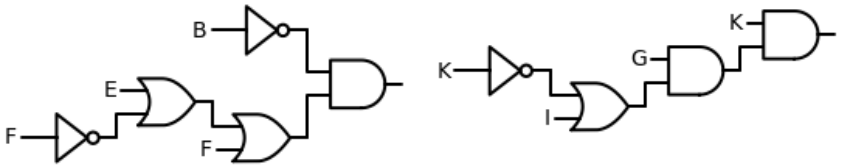
101157197	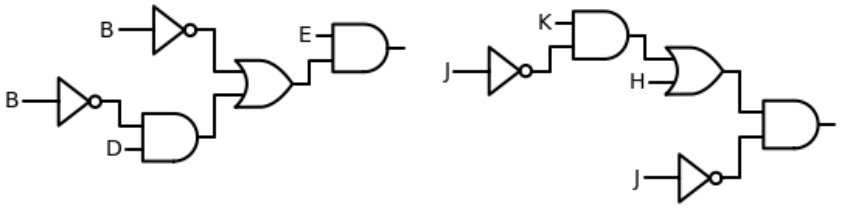

Locate your nine-digit student identification number in the table below and you will see the circuit schematics that have been assigned to you for Assignment 3. If you are unable to locate your student number below, then you must contact your instructor at robert.collier@scs.carleton.ca, ASAP and no later than Wednesday, October 6th by 11:59pm EST.

101160917	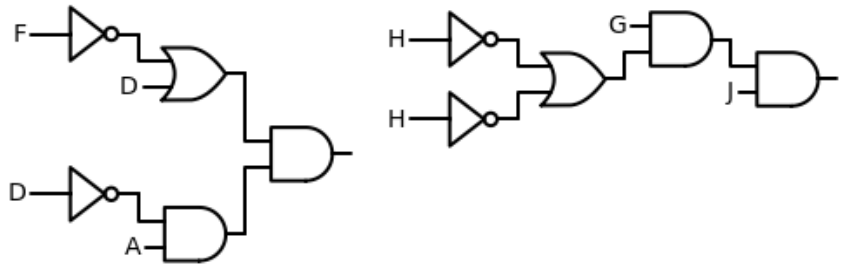
101163311	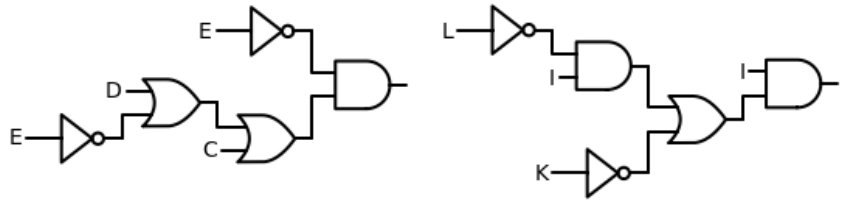
101167957	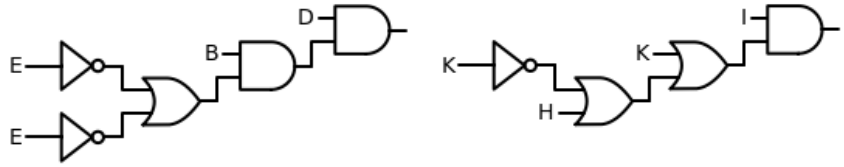
101169359	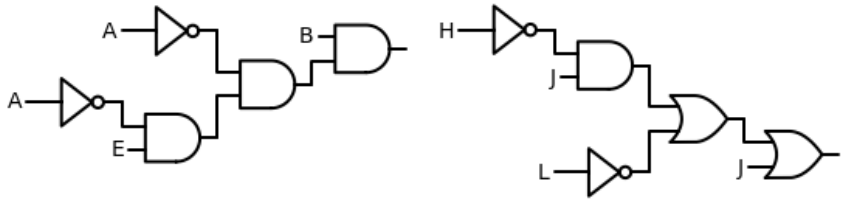
101169521	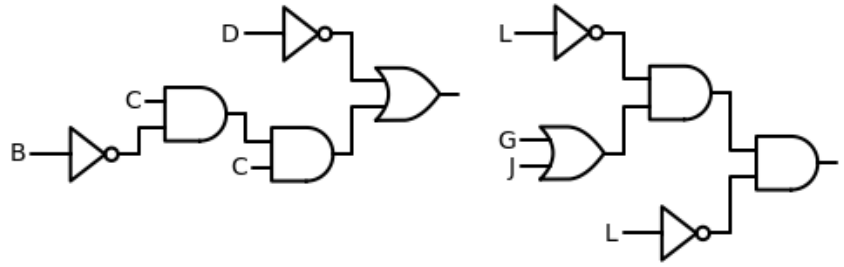

Locate your nine-digit student identification number in the table below and you will see the circuit schematics that have been assigned to you for Assignment 3. If you are unable to locate your student number below, then you must contact your instructor at robert.collier@scs.carleton.ca, ASAP and no later than Wednesday, October 6th by 11:59pm EST.

101169955	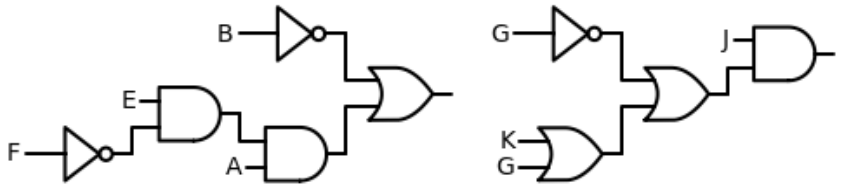
101173643	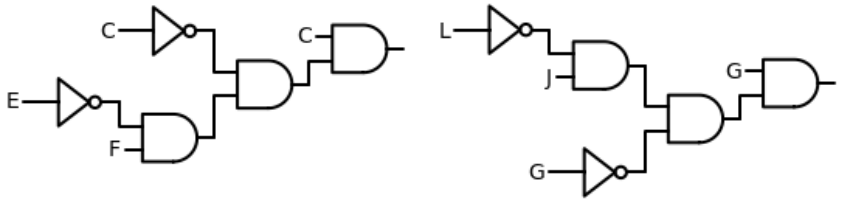
101174487	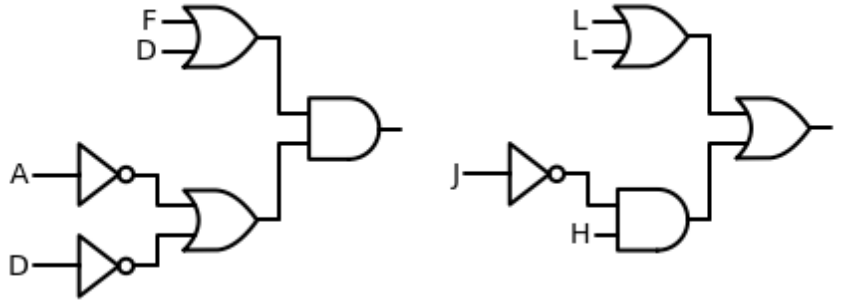
101179451	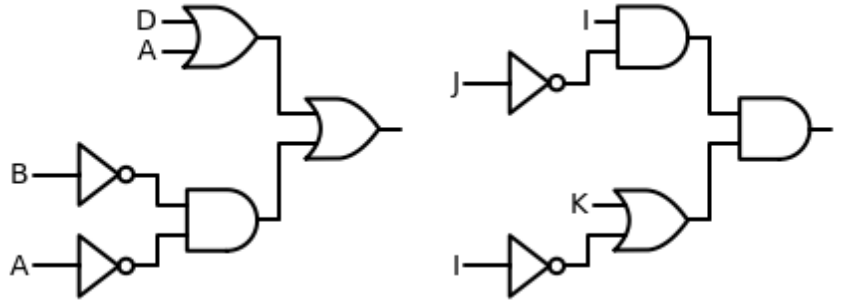
101180101	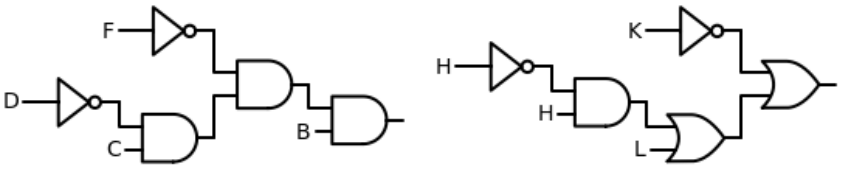

Locate your nine-digit student identification number in the table below and you will see the circuit schematics that have been assigned to you for Assignment 3. If you are unable to locate your student number below, then you must contact your instructor at robert.collier@scs.carleton.ca, ASAP and no later than Wednesday, October 6th by 11:59pm EST.

101181953	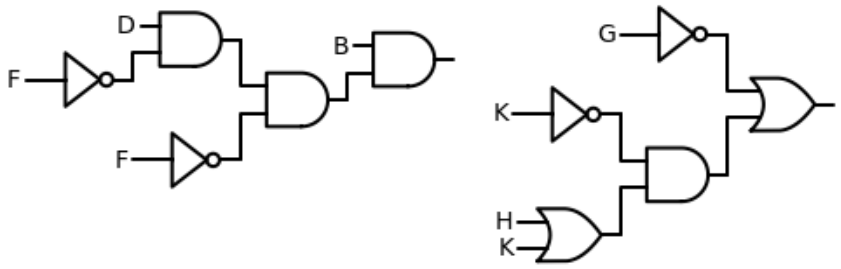
101182258	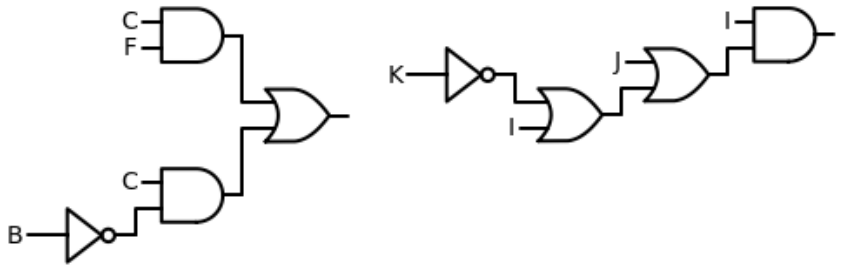
101183136	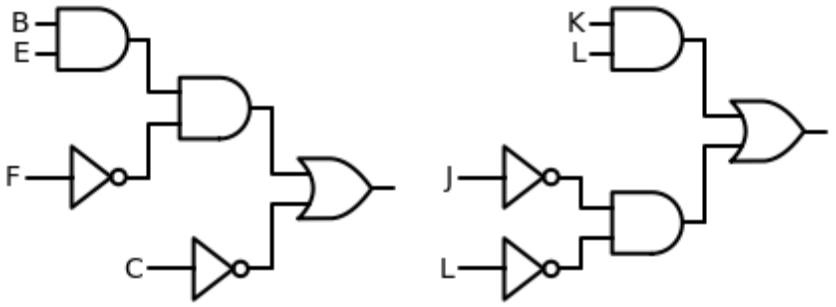
101183280	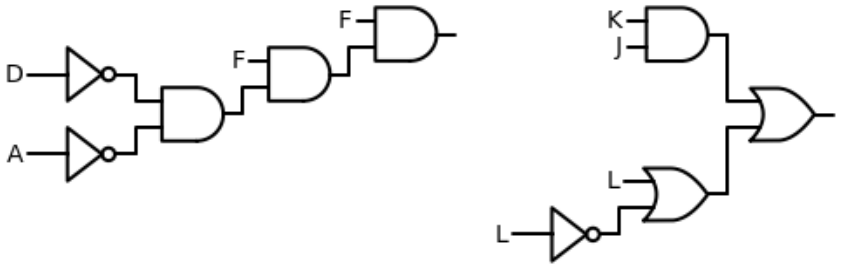

Locate your nine-digit student identification number in the table below and you will see the circuit schematics that have been assigned to you for Assignment 3. If you are unable to locate your student number below, then you must contact your instructor at robert.collier@scs.carleton.ca, ASAP and no later than Wednesday, October 6th by 11:59pm EST.

101183350	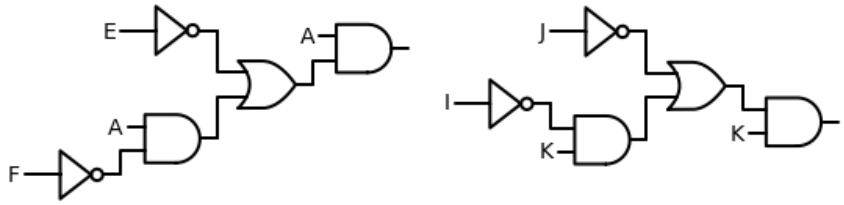
101184407	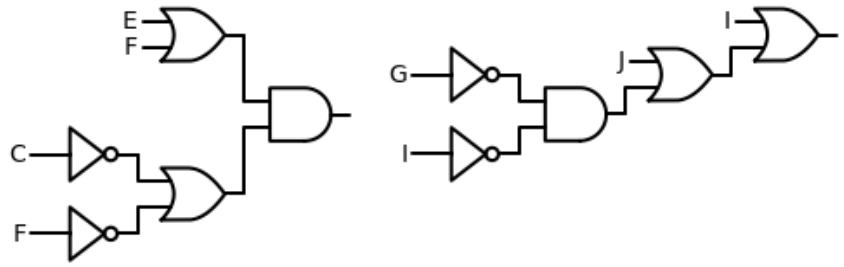
101185260	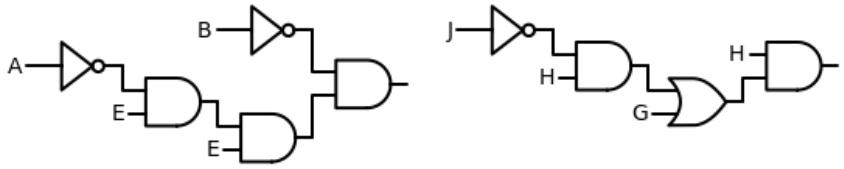
101186046	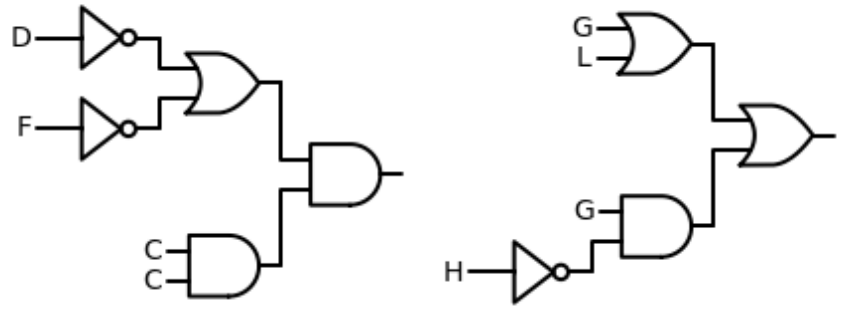
101186080	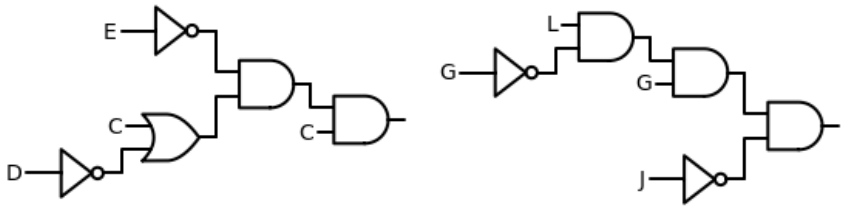

Locate your nine-digit student identification number in the table below and you will see the circuit schematics that have been assigned to you for Assignment 3. If you are unable to locate your student number below, then you must contact your instructor at robert.collier@scs.carleton.ca, ASAP and no later than Wednesday, October 6th by 11:59pm EST.

101186958	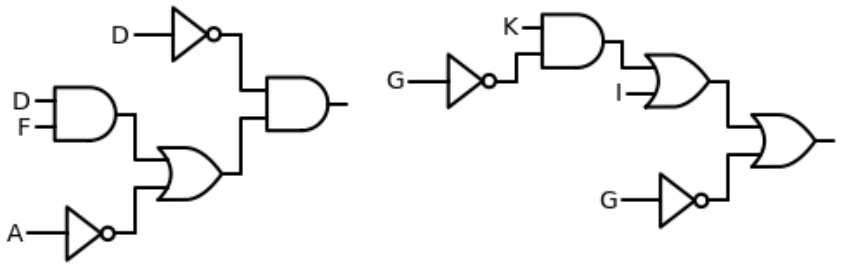
101187027	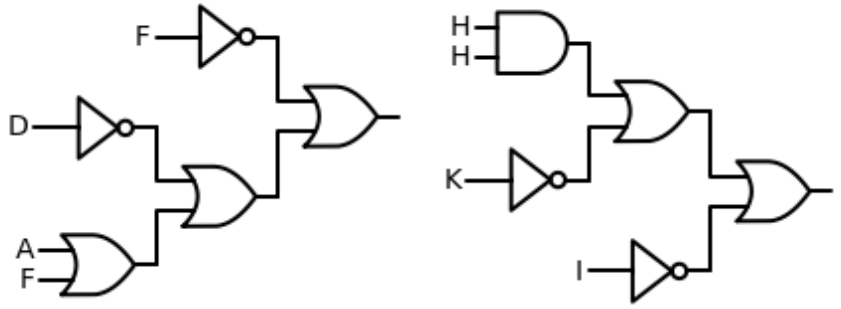
101187383	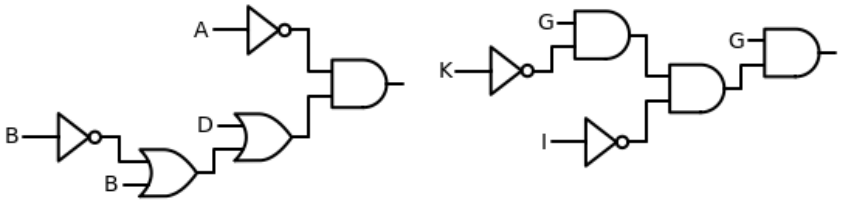
101187527	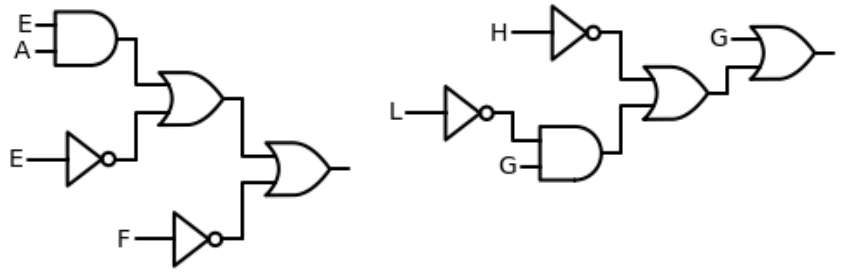
101188828	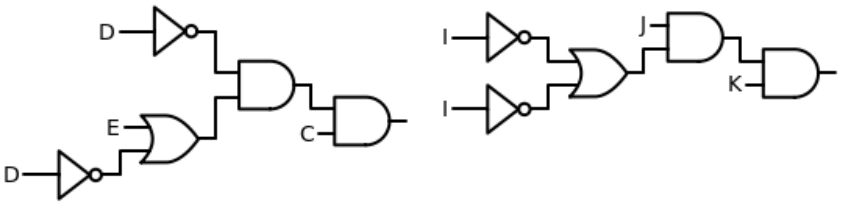

Locate your nine-digit student identification number in the table below and you will see the circuit schematics that have been assigned to you for Assignment 3. If you are unable to locate your student number below, then you must contact your instructor at robert.collier@scs.carleton.ca, ASAP and no later than Wednesday, October 6th by 11:59pm EST.

101189646	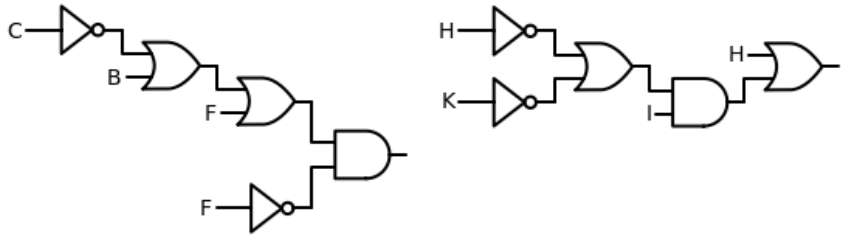
101190087	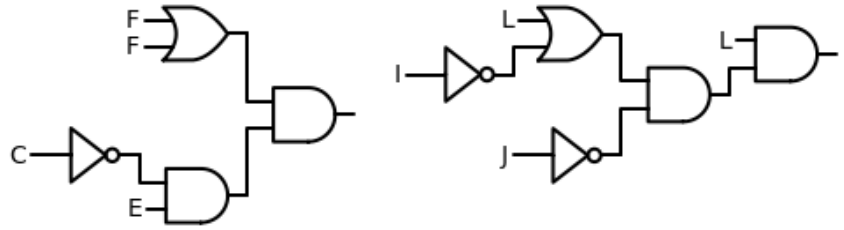
101190428	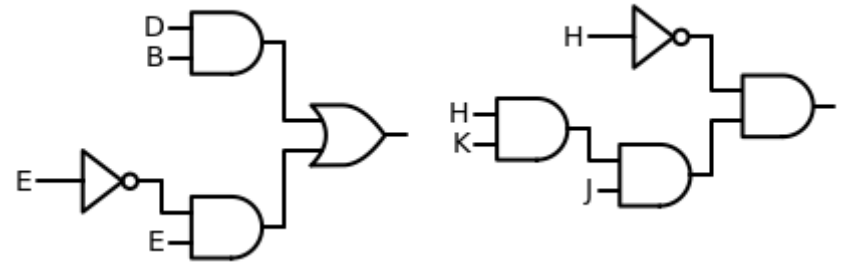
101191502	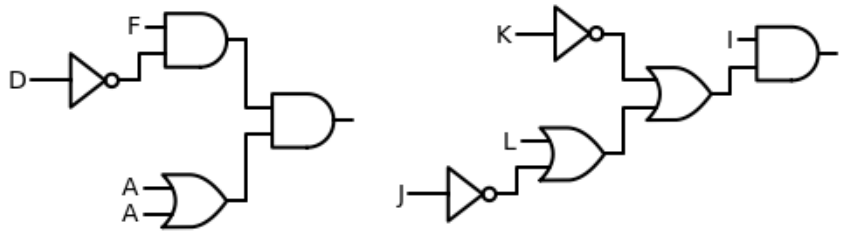
101192213	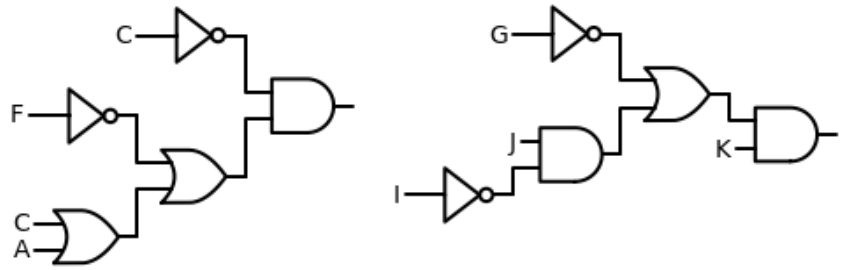

Locate your nine-digit student identification number in the table below and you will see the circuit schematics that have been assigned to you for Assignment 3. If you are unable to locate your student number below, then you must contact your instructor at robert.collier@scs.carleton.ca, ASAP and no later than Wednesday, October 6th by 11:59pm EST.

101192615	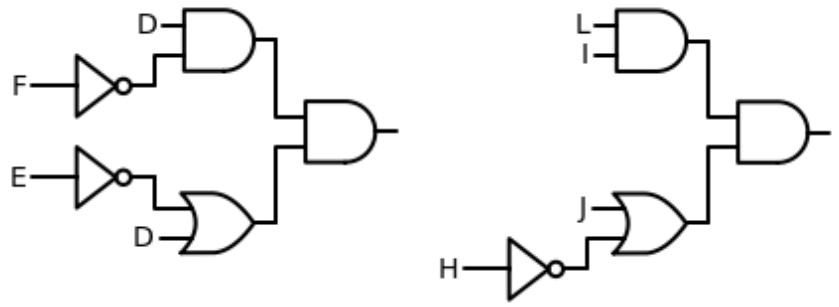
101193287	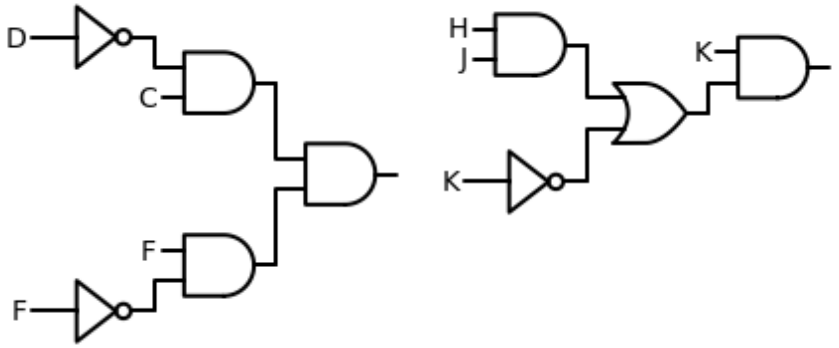
101194261	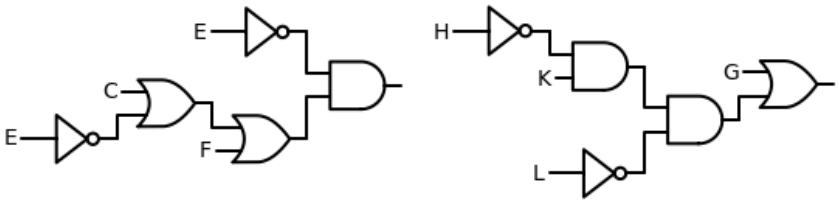
101195636	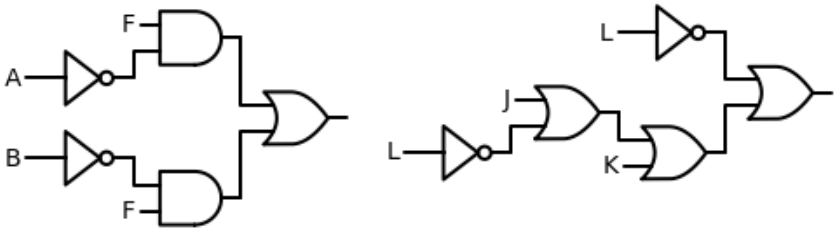

Locate your nine-digit student identification number in the table below and you will see the circuit schematics that have been assigned to you for Assignment 3. If you are unable to locate your student number below, then you must contact your instructor at robert.collier@scs.carleton.ca, ASAP and no later than Wednesday, October 6th by 11:59pm EST.

101196580	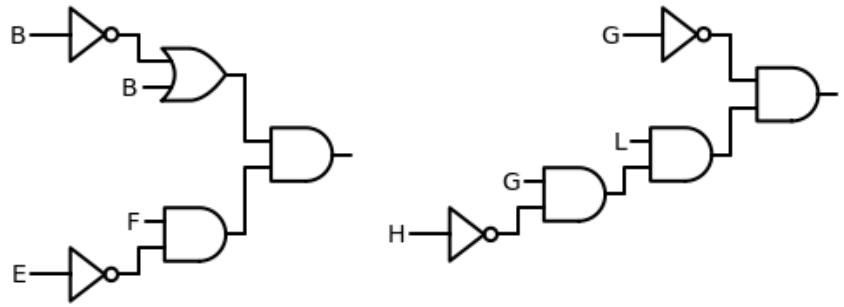
101196855	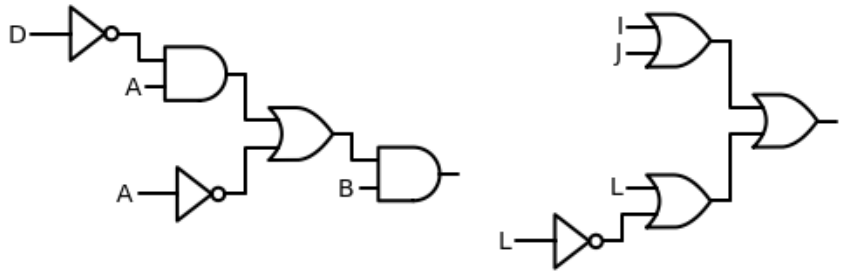
101197379	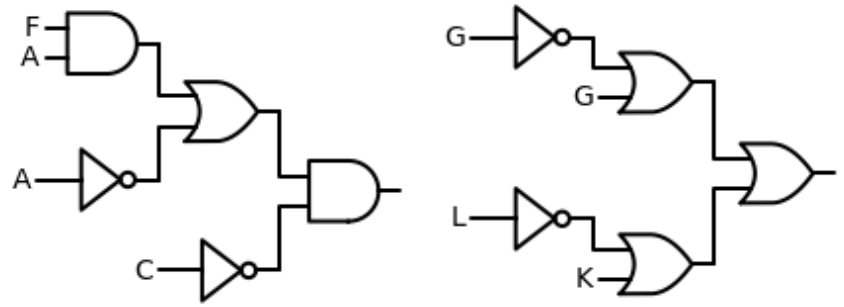
101197392	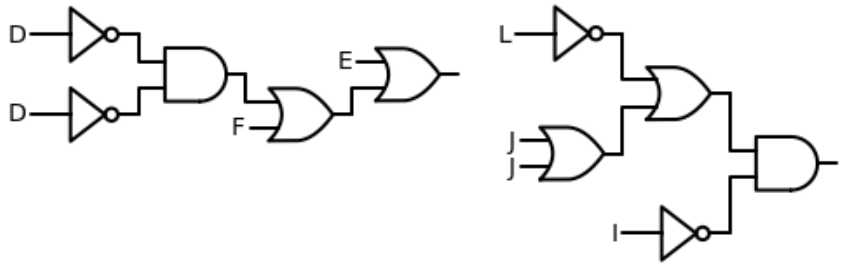

Locate your nine-digit student identification number in the table below and you will see the circuit schematics that have been assigned to you for Assignment 3. If you are unable to locate your student number below, then you must contact your instructor at robert.collier@scs.carleton.ca, ASAP and no later than Wednesday, October 6th by 11:59pm EST.

101197802	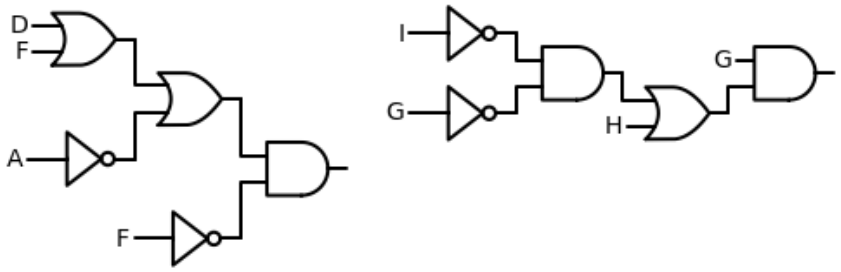
101199088	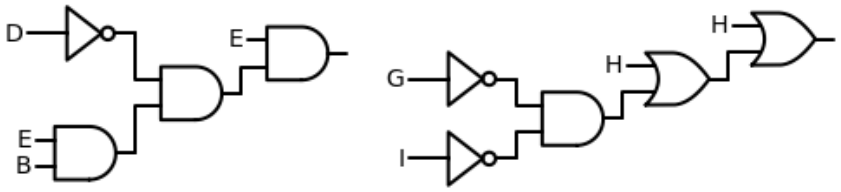
101200628	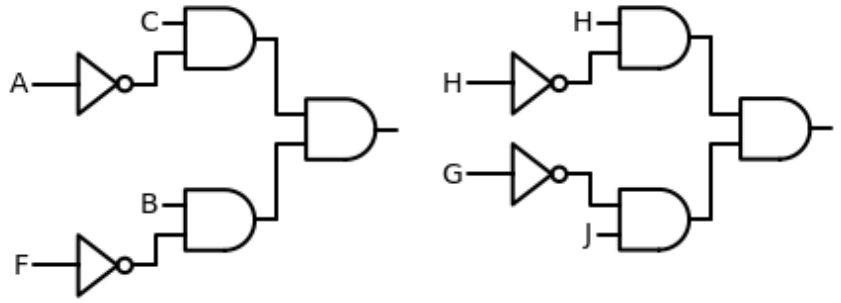
101200735	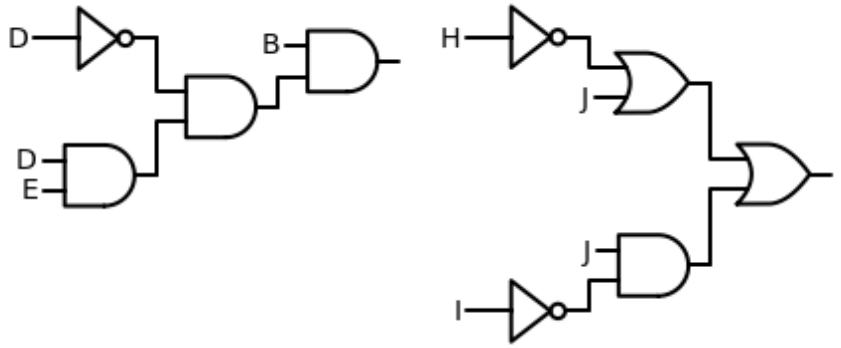

Locate your nine-digit student identification number in the table below and you will see the circuit schematics that have been assigned to you for Assignment 3. If you are unable to locate your student number below, then you must contact your instructor at robert.collier@scs.carleton.ca, ASAP and no later than Wednesday, October 6th by 11:59pm EST.

101201413	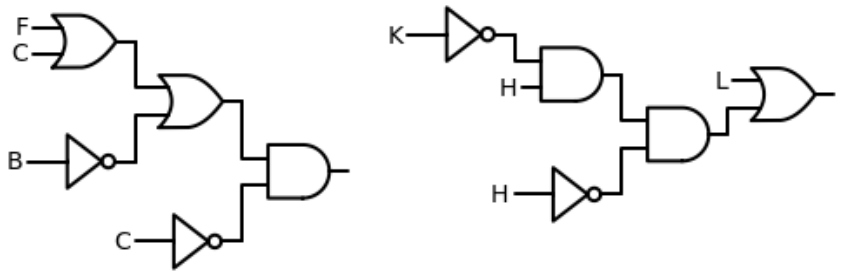
101201506	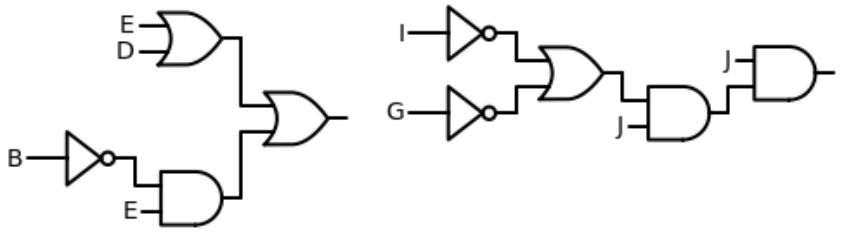
101201602	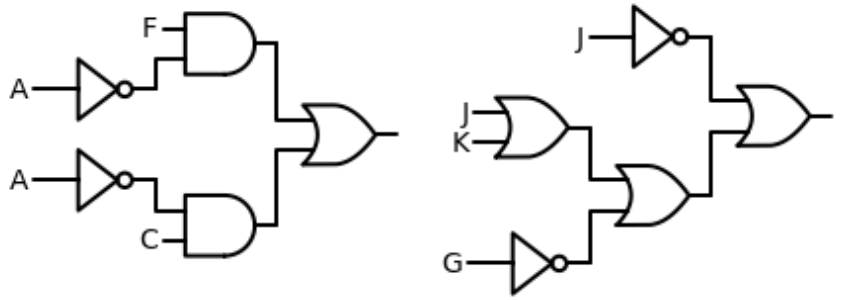
101202368	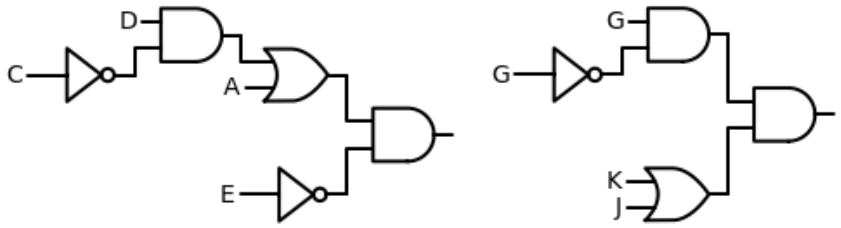

Locate your nine-digit student identification number in the table below and you will see the circuit schematics that have been assigned to you for Assignment 3. If you are unable to locate your student number below, then you must contact your instructor at robert.collier@scs.carleton.ca, ASAP and no later than Wednesday, October 6th by 11:59pm EST.

101202391	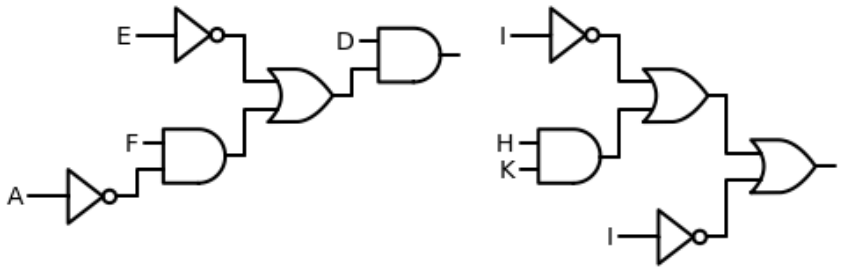
101202565	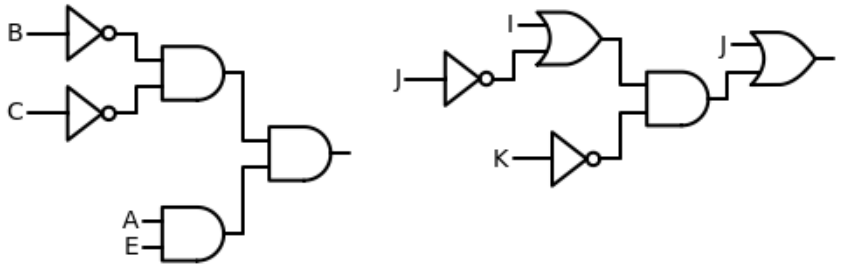
101203340	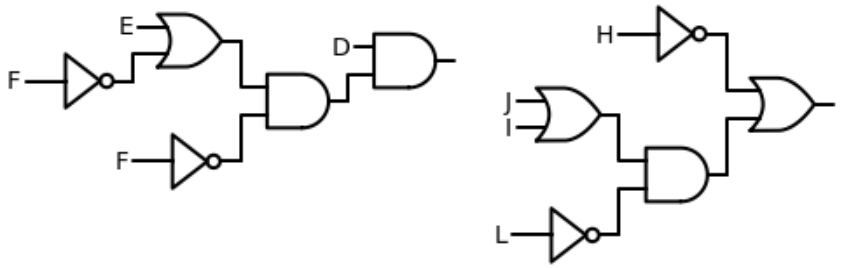
101203823	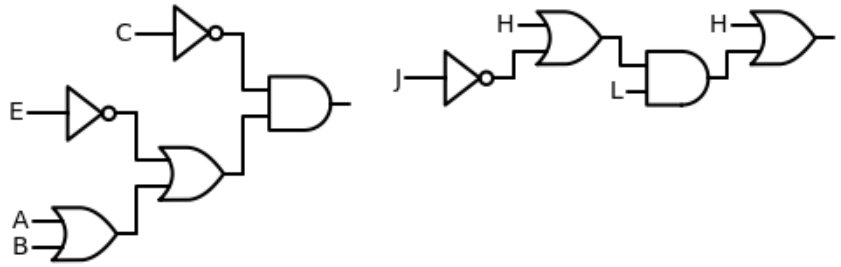

Locate your nine-digit student identification number in the table below and you will see the circuit schematics that have been assigned to you for Assignment 3. If you are unable to locate your student number below, then you must contact your instructor at robert.collier@scs.carleton.ca, ASAP and no later than Wednesday, October 6th by 11:59pm EST.

101203889	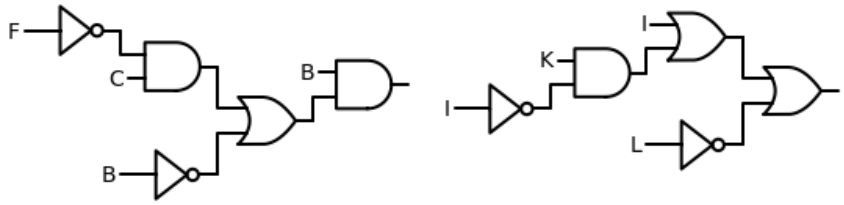
101204456	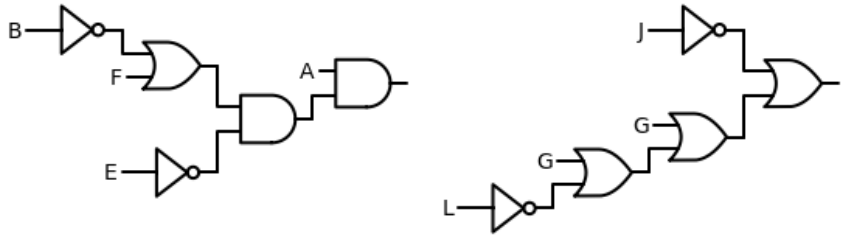
101205113	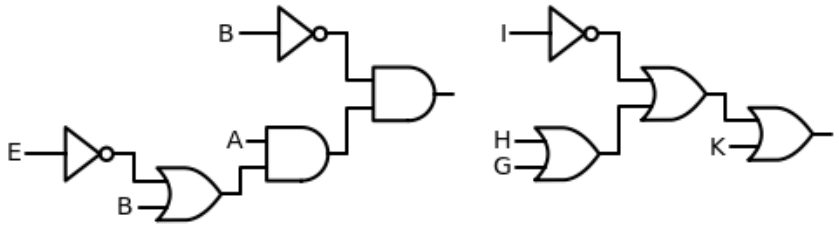
101205632	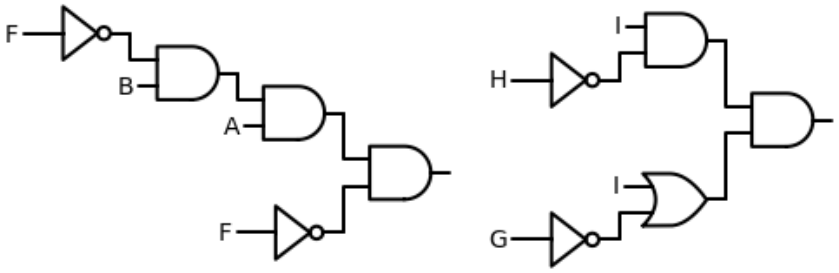
101207361	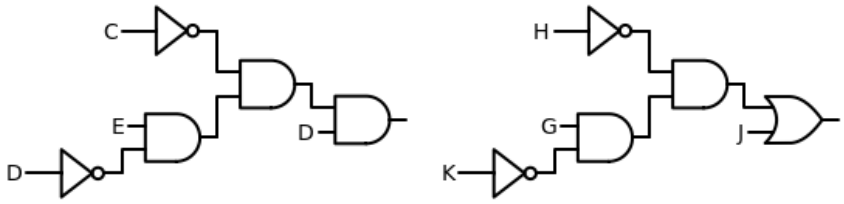

Locate your nine-digit student identification number in the table below and you will see the circuit schematics that have been assigned to you for Assignment 3. If you are unable to locate your student number below, then you must contact your instructor at robert.collier@scs.carleton.ca, ASAP and no later than Wednesday, October 6th by 11:59pm EST.

101209408	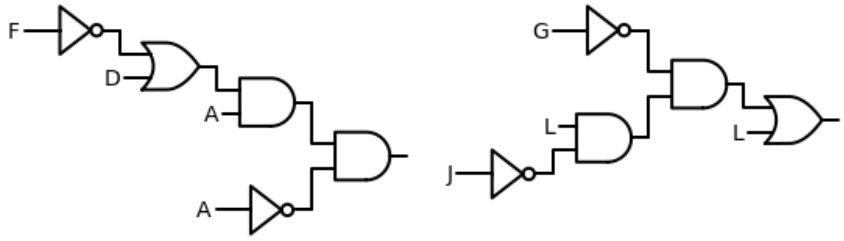
101209541	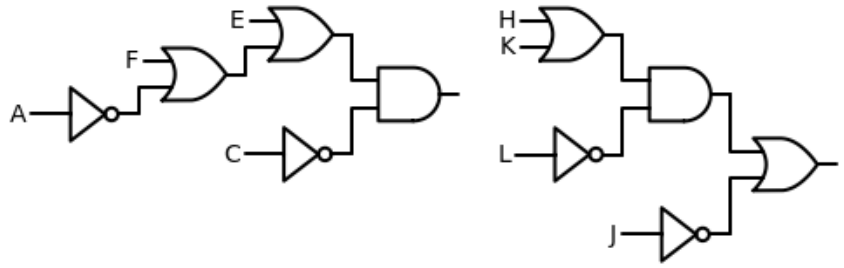
101209607	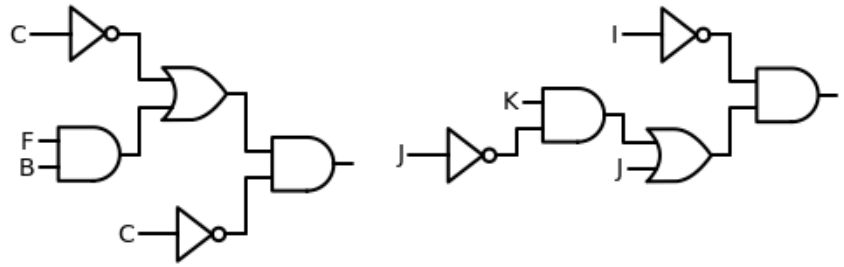
101209998	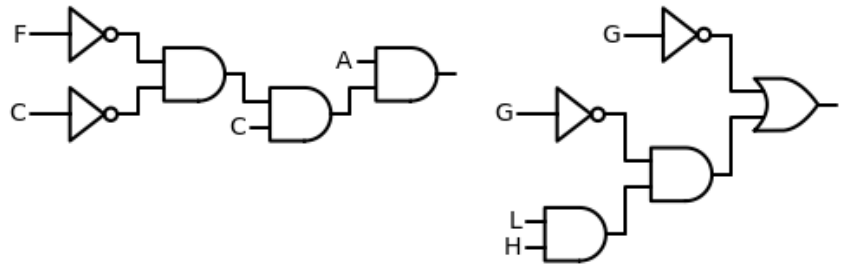

Locate your nine-digit student identification number in the table below and you will see the circuit schematics that have been assigned to you for Assignment 3. If you are unable to locate your student number below, then you must contact your instructor at robert.collier@scs.carleton.ca, ASAP and no later than Wednesday, October 6th by 11:59pm EST.

101210456	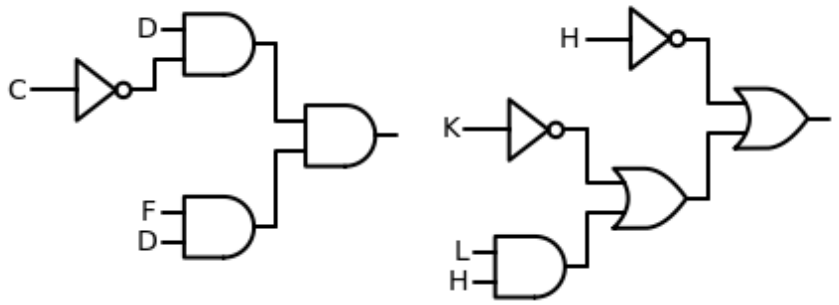
101215831	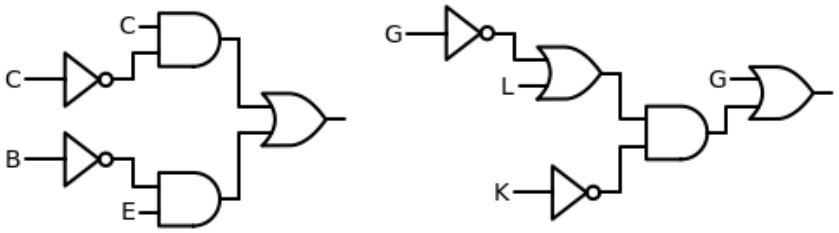
101215994	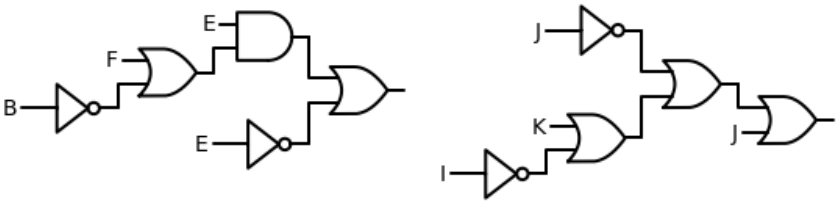
101216265	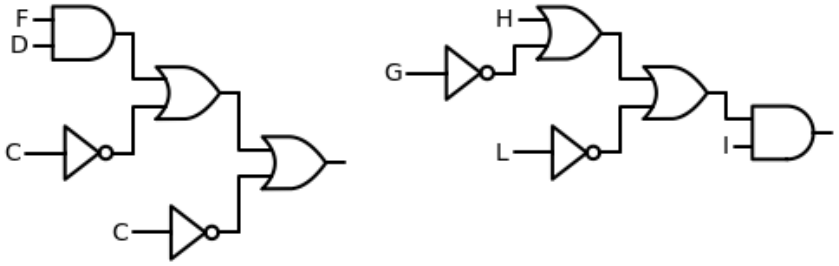

Locate your nine-digit student identification number in the table below and you will see the circuit schematics that have been assigned to you for Assignment 3. If you are unable to locate your student number below, then you must contact your instructor at robert.collier@scs.carleton.ca, ASAP and no later than Wednesday, October 6th by 11:59pm EST.

101216289	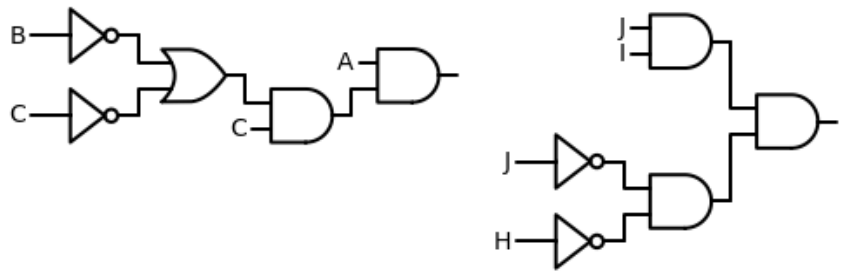
101216395	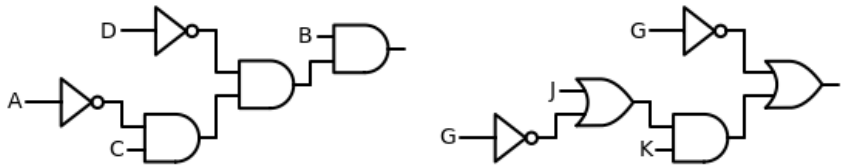
101216735	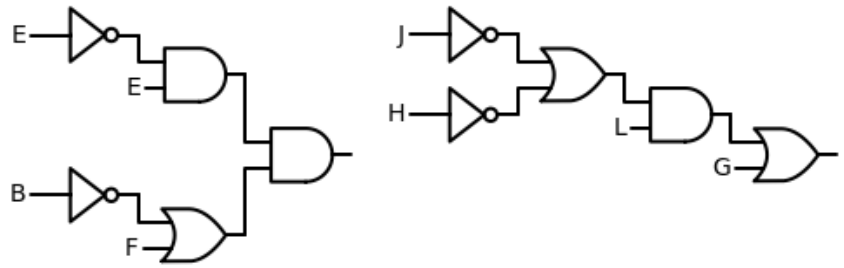
101216870	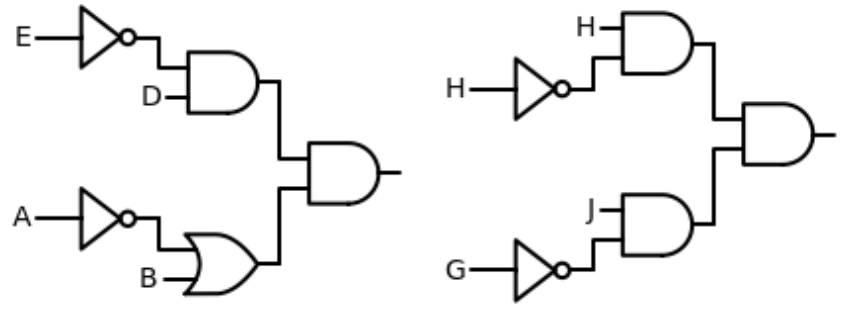

Locate your nine-digit student identification number in the table below and you will see the circuit schematics that have been assigned to you for Assignment 3. If you are unable to locate your student number below, then you must contact your instructor at robert.collier@scs.carleton.ca, ASAP and no later than Wednesday, October 6th by 11:59pm EST.

101217109	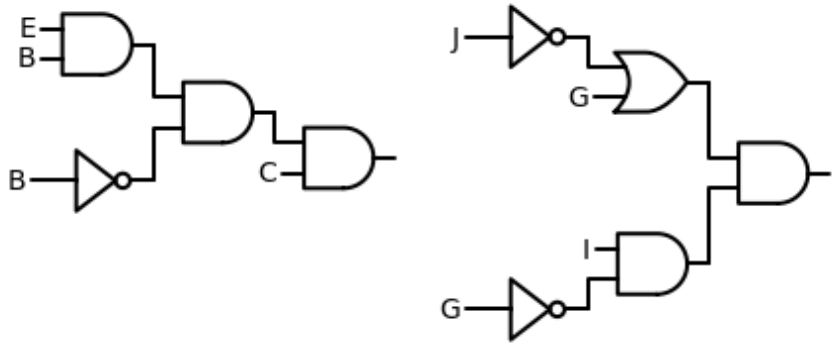
101217599	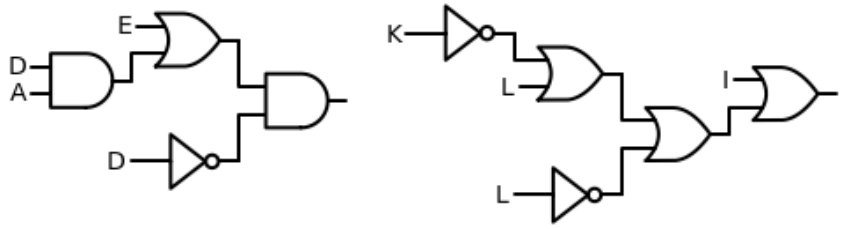
101217621	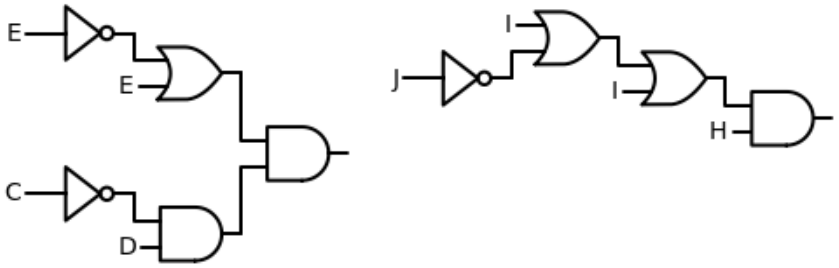
101217780	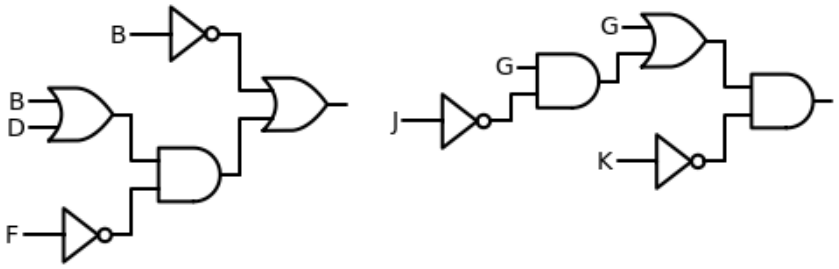

Locate your nine-digit student identification number in the table below and you will see the circuit schematics that have been assigned to you for Assignment 3. If you are unable to locate your student number below, then you must contact your instructor at robert.collier@scs.carleton.ca, ASAP and no later than Wednesday, October 6th by 11:59pm EST.

101217903	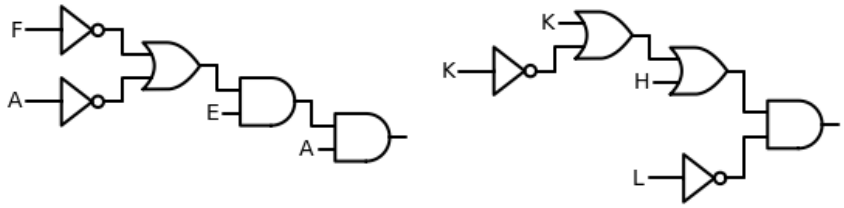
101217944	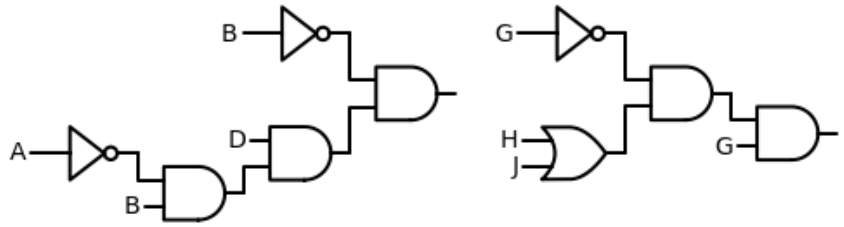
101218001	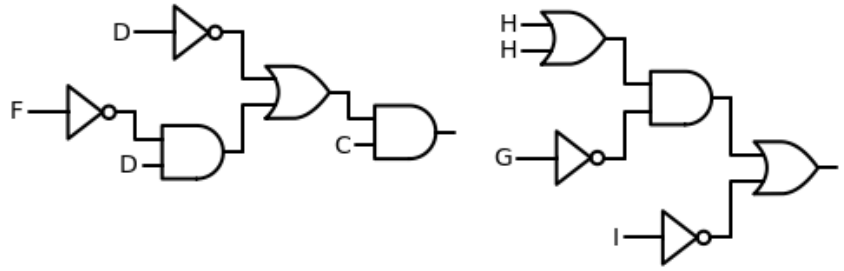
101218031	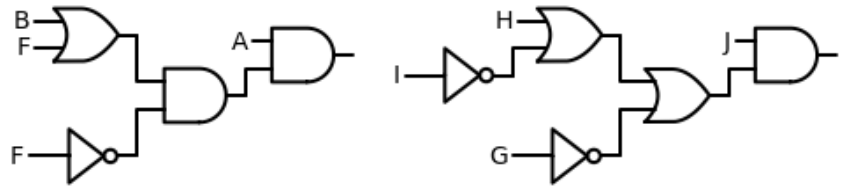
101218051	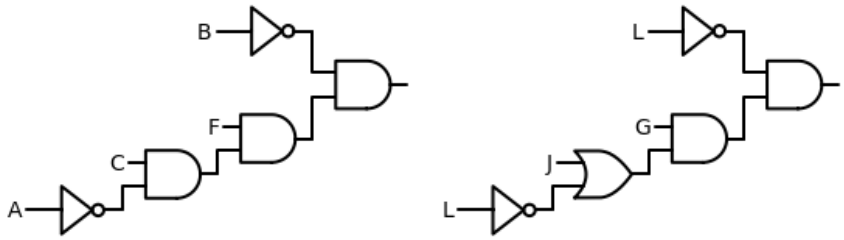

Locate your nine-digit student identification number in the table below and you will see the circuit schematics that have been assigned to you for Assignment 3. If you are unable to locate your student number below, then you must contact your instructor at robert.collier@scs.carleton.ca, ASAP and no later than Wednesday, October 6th by 11:59pm EST.

101218178	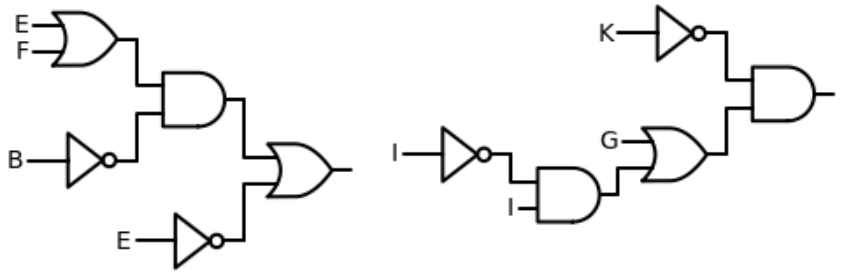
101218258	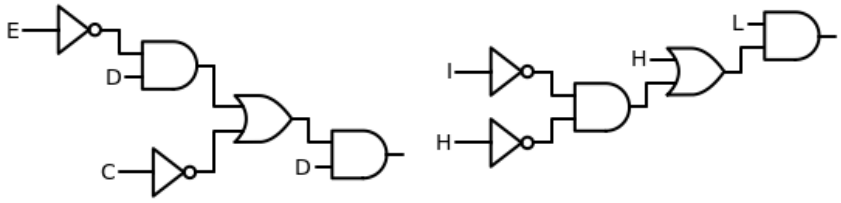
101218430	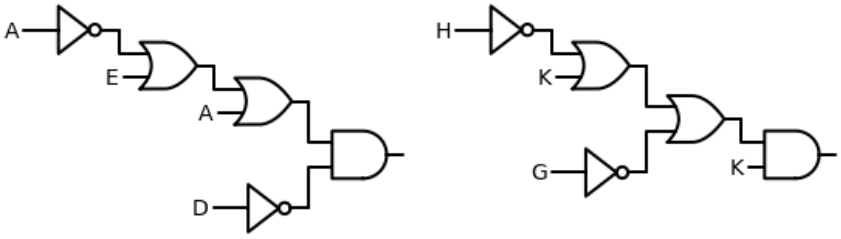
101218433	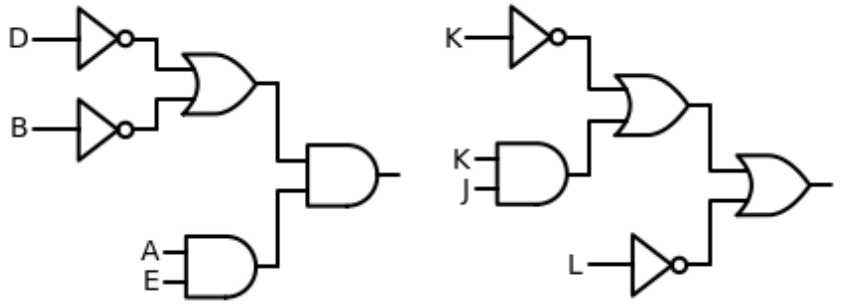
101218514	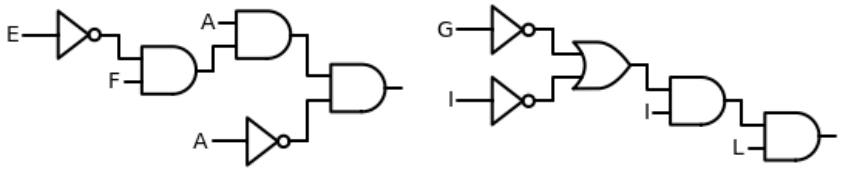

Locate your nine-digit student identification number in the table below and you will see the circuit schematics that have been assigned to you for Assignment 3. If you are unable to locate your student number below, then you must contact your instructor at robert.collier@scs.carleton.ca, ASAP and no later than Wednesday, October 6th by 11:59pm EST.

101218591	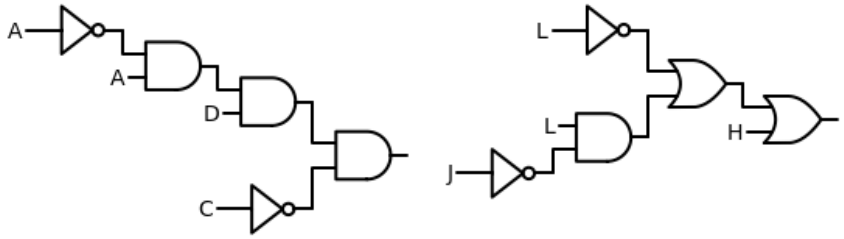
101218592	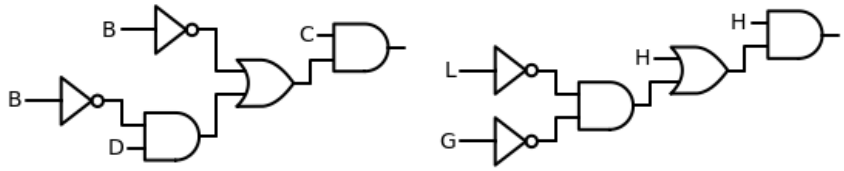
101218693	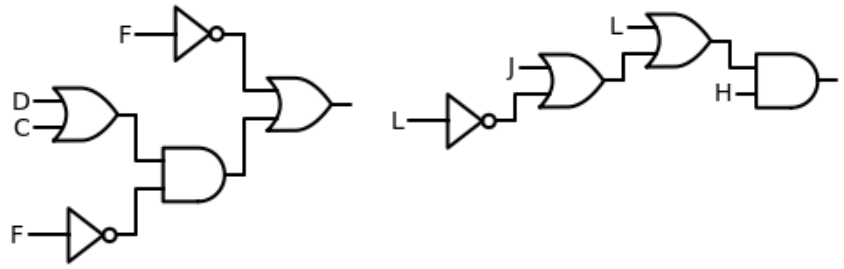
101218700	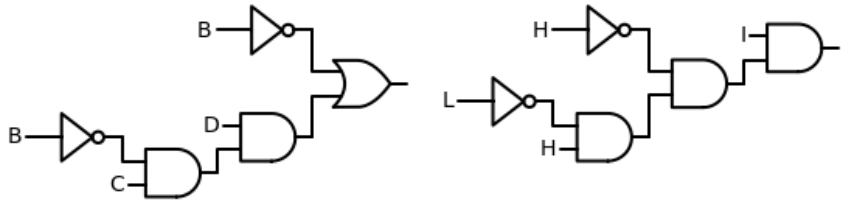
101218755	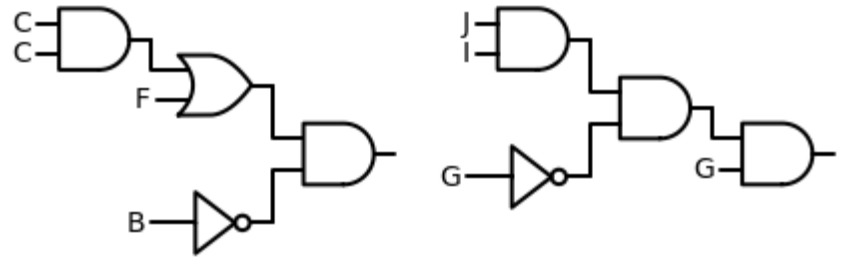

Locate your nine-digit student identification number in the table below and you will see the circuit schematics that have been assigned to you for Assignment 3. If you are unable to locate your student number below, then you must contact your instructor at robert.collier@scs.carleton.ca, ASAP and no later than Wednesday, October 6th by 11:59pm EST.

101218952	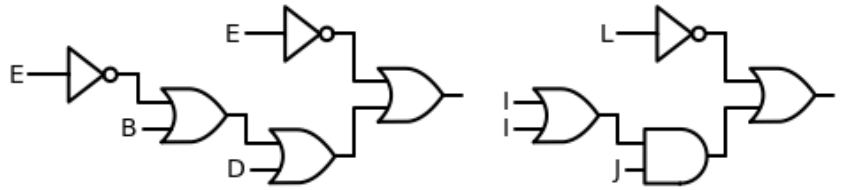
101218974	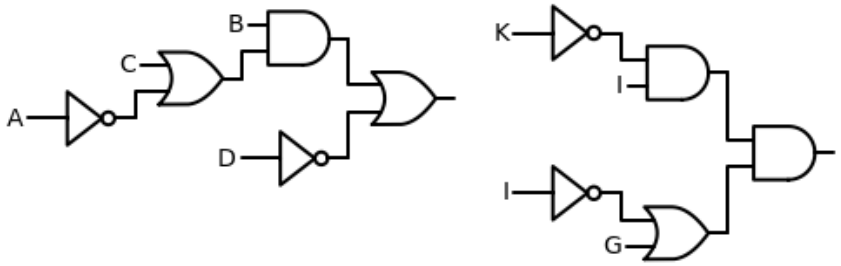
101218998	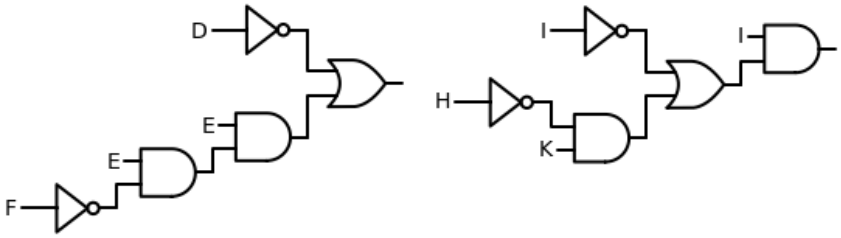
101219043	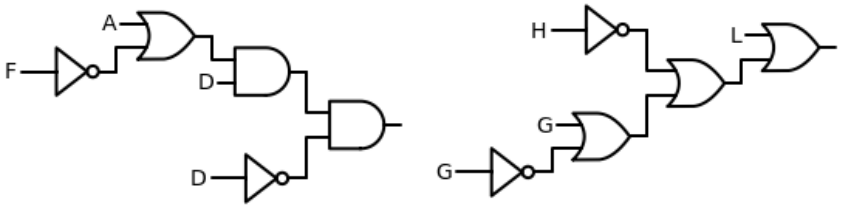
101219193	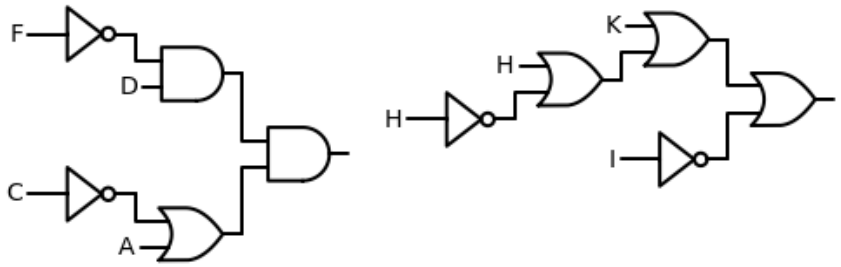

Locate your nine-digit student identification number in the table below and you will see the circuit schematics that have been assigned to you for Assignment 3. If you are unable to locate your student number below, then you must contact your instructor at robert.collier@scs.carleton.ca, ASAP and no later than Wednesday, October 6th by 11:59pm EST.

101219383	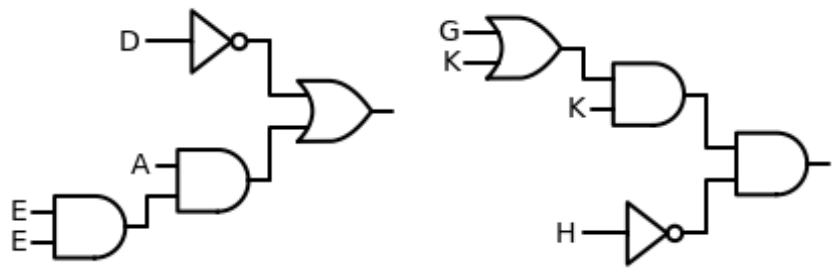
101219397	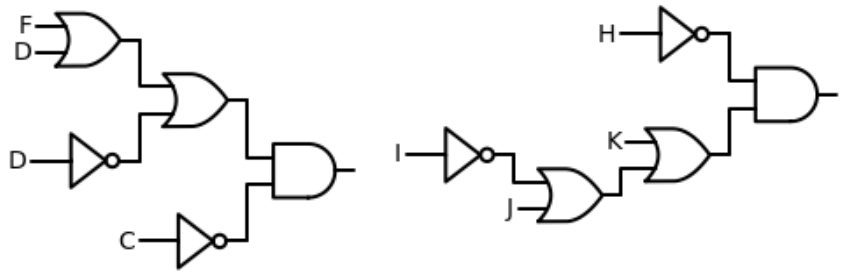
101219545	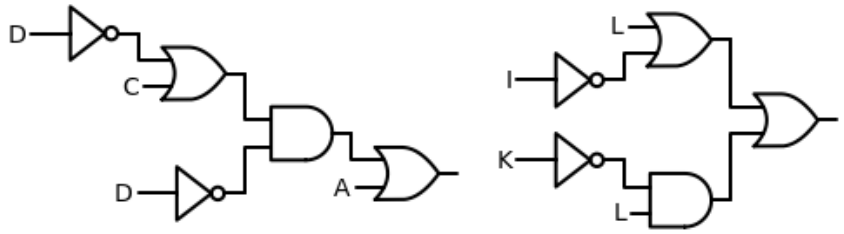
101219557	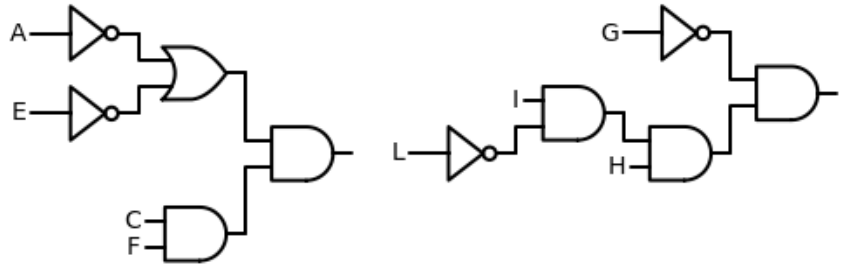

Locate your nine-digit student identification number in the table below and you will see the circuit schematics that have been assigned to you for Assignment 3. If you are unable to locate your student number below, then you must contact your instructor at robert.collier@scs.carleton.ca, ASAP and no later than Wednesday, October 6th by 11:59pm EST.

101219671	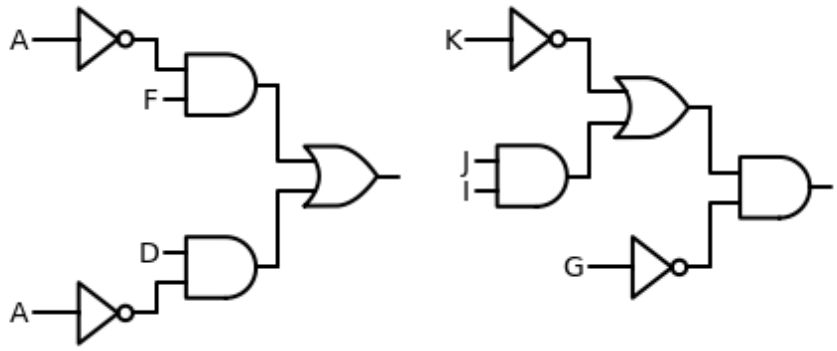
101219693	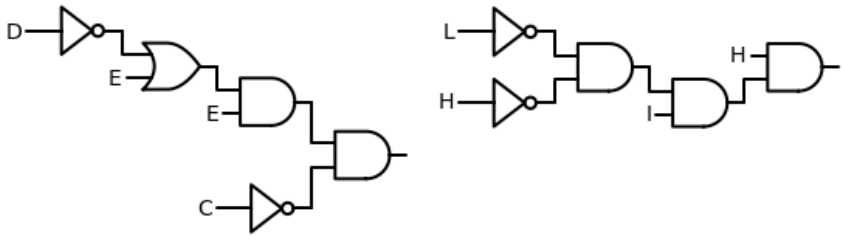
101219735	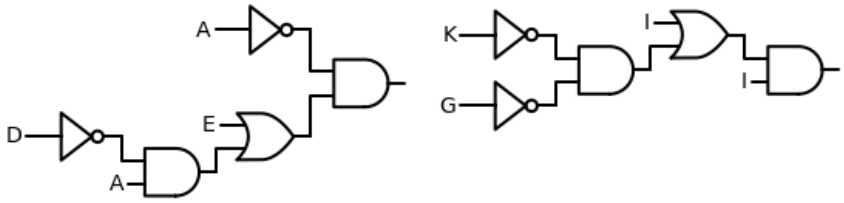
101219747	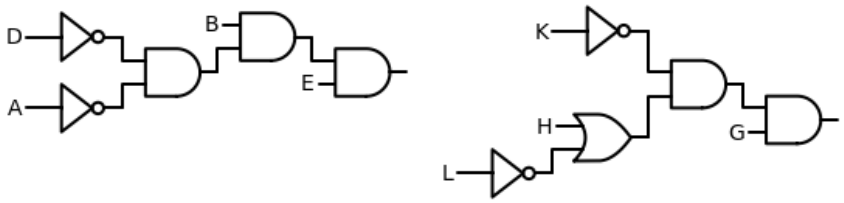
101219760	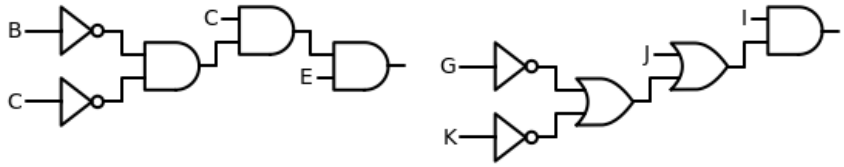

Locate your nine-digit student identification number in the table below and you will see the circuit schematics that have been assigned to you for Assignment 3. If you are unable to locate your student number below, then you must contact your instructor at robert.collier@scs.carleton.ca, ASAP and no later than Wednesday, October 6th by 11:59pm EST.

101219769	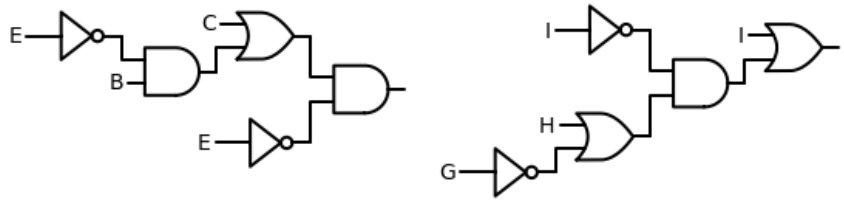
101219772	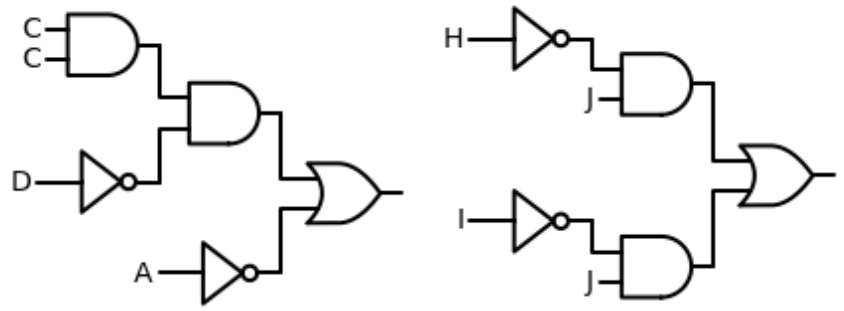
101219909	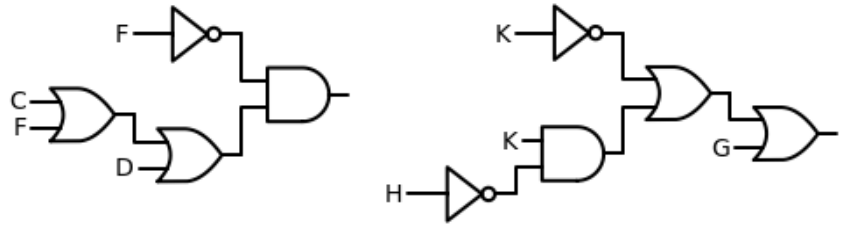
101220031	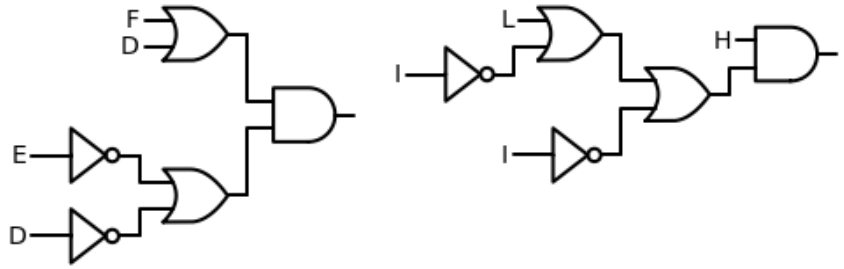

Locate your nine-digit student identification number in the table below and you will see the circuit schematics that have been assigned to you for Assignment 3. If you are unable to locate your student number below, then you must contact your instructor at robert.collier@scs.carleton.ca, ASAP and no later than Wednesday, October 6th by 11:59pm EST.

101220137	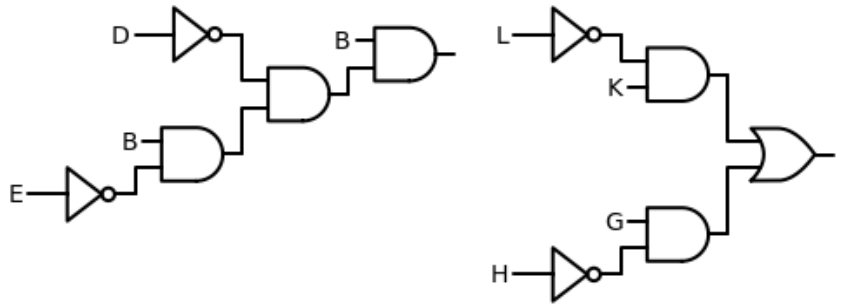
101220266	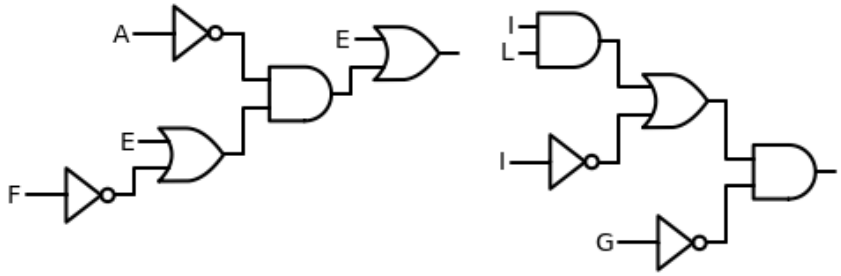
101220321	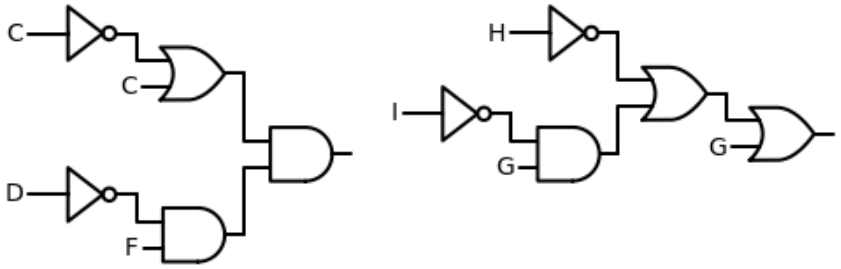
101220351	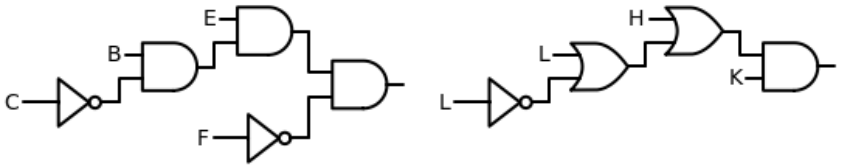

Locate your nine-digit student identification number in the table below and you will see the circuit schematics that have been assigned to you for Assignment 3. If you are unable to locate your student number below, then you must contact your instructor at robert.collier@scs.carleton.ca, ASAP and no later than Wednesday, October 6th by 11:59pm EST.

101220452	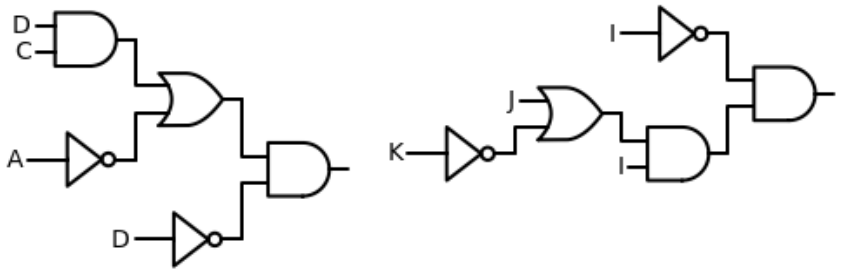
101220472	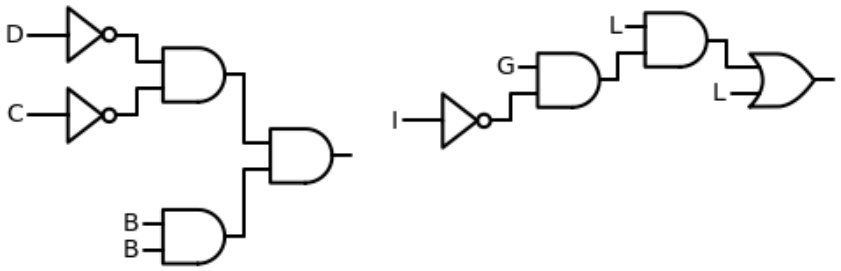
101220508	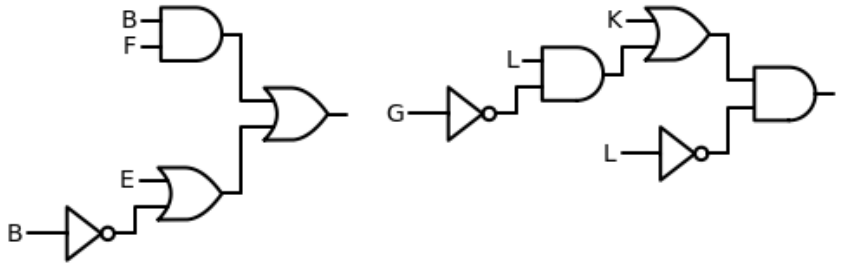
101220538	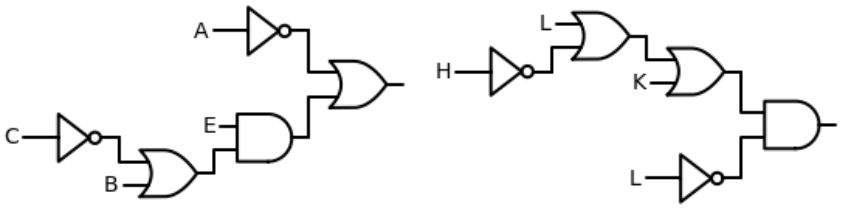
101220551	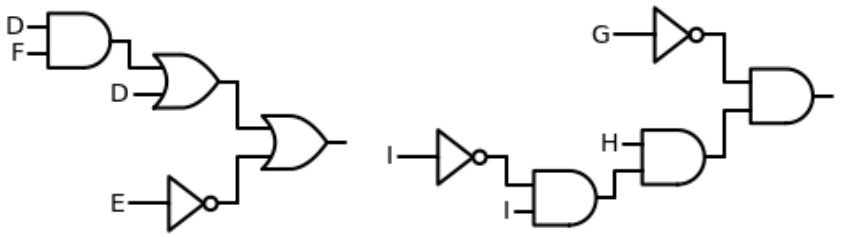

Locate your nine-digit student identification number in the table below and you will see the circuit schematics that have been assigned to you for Assignment 3. If you are unable to locate your student number below, then you must contact your instructor at robert.collier@scs.carleton.ca, ASAP and no later than Wednesday, October 6th by 11:59pm EST.

101220559	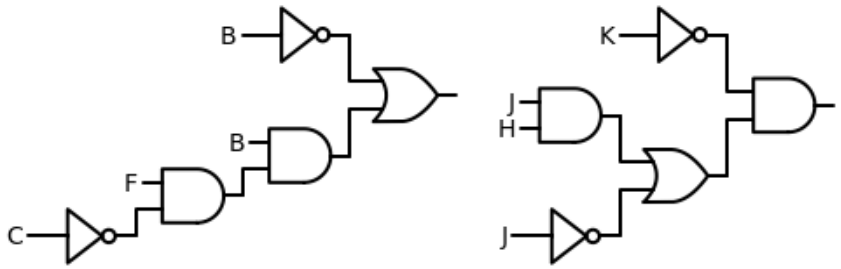
101220579	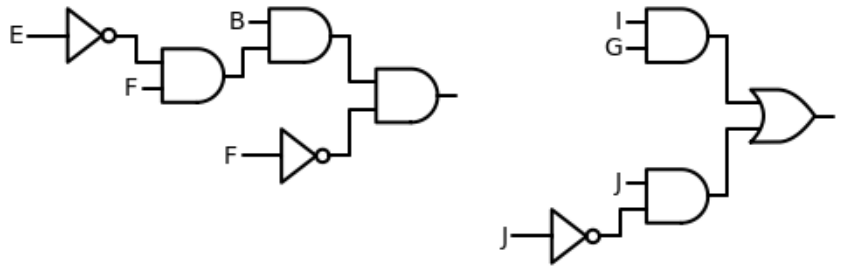
101220597	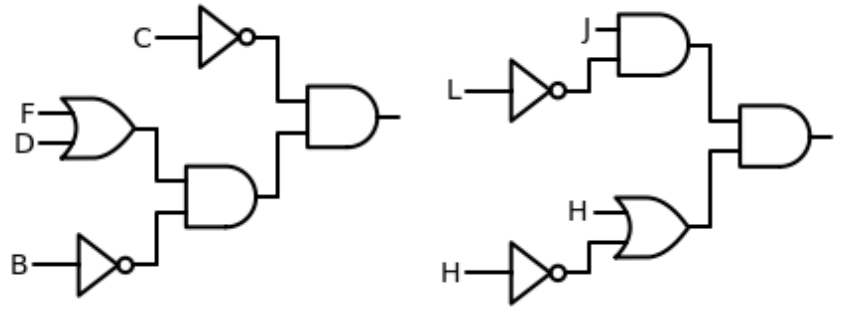
101220611	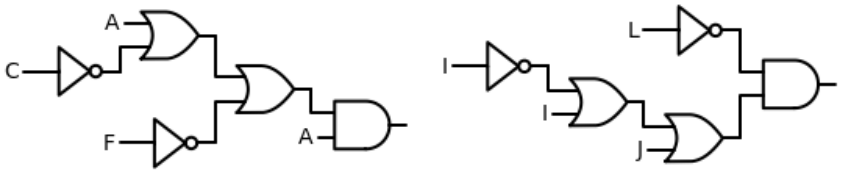
101220625	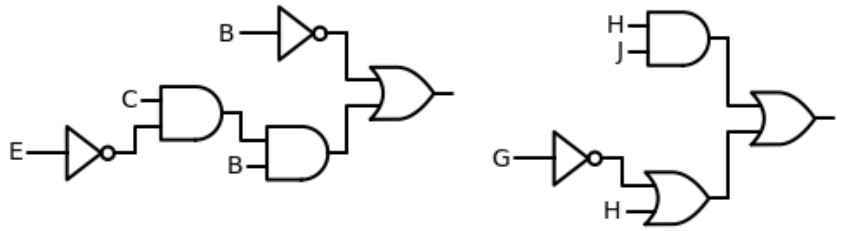

Locate your nine-digit student identification number in the table below and you will see the circuit schematics that have been assigned to you for Assignment 3. If you are unable to locate your student number below, then you must contact your instructor at robert.collier@scs.carleton.ca, ASAP and no later than Wednesday, October 6th by 11:59pm EST.

101220637	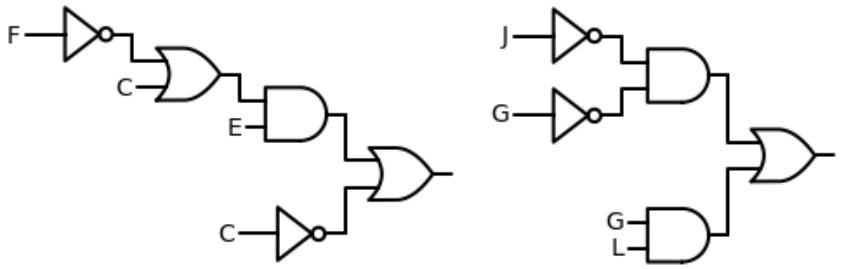
101220686	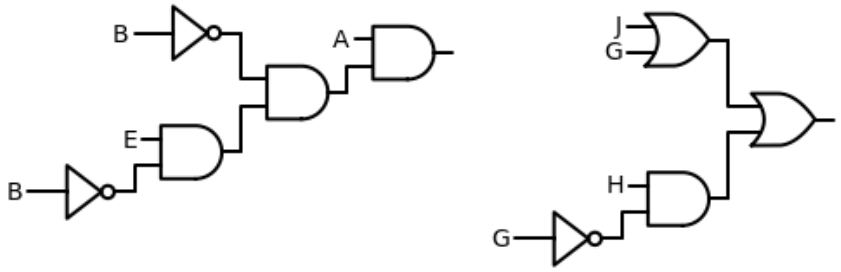
101220698	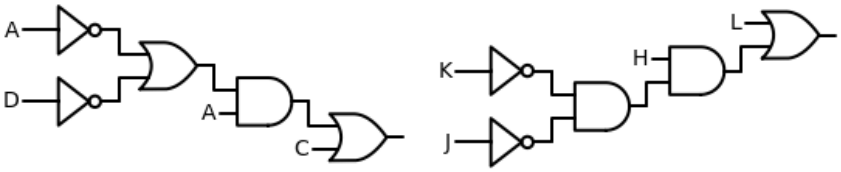
101220729	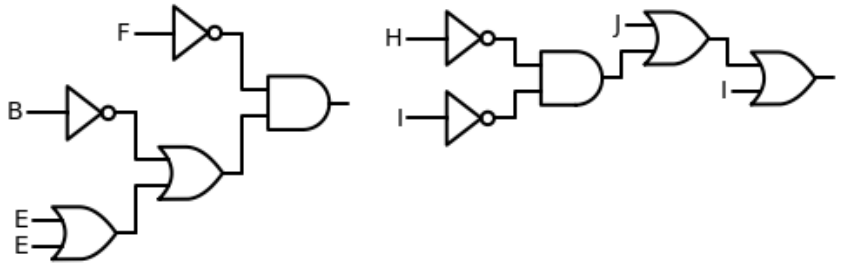
101220860	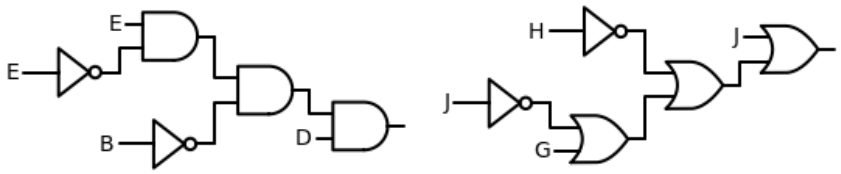

Locate your nine-digit student identification number in the table below and you will see the circuit schematics that have been assigned to you for Assignment 3. If you are unable to locate your student number below, then you must contact your instructor at robert.collier@scs.carleton.ca, ASAP and no later than Wednesday, October 6th by 11:59pm EST.

101220922	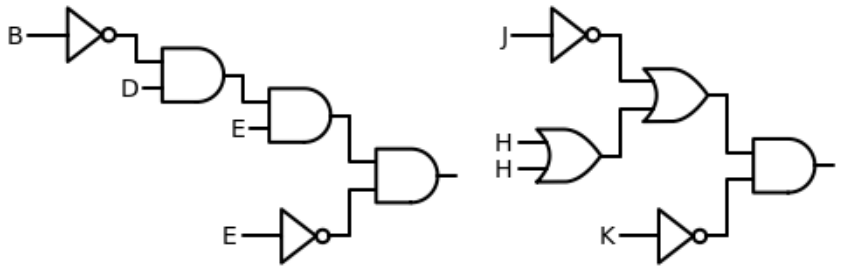
101220972	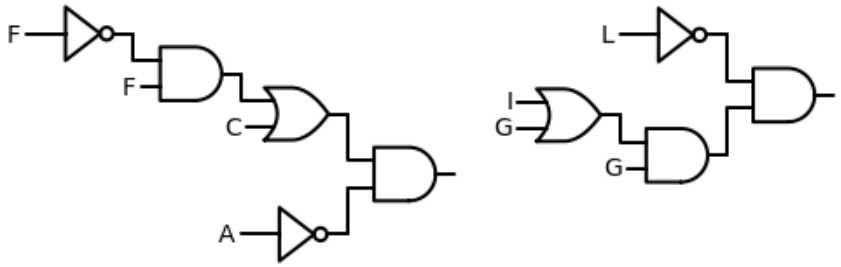
101220985	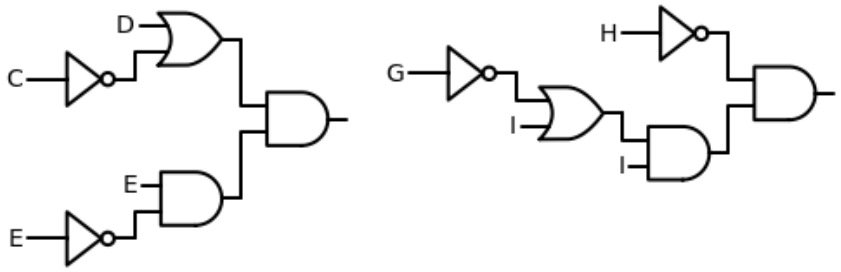
101220987	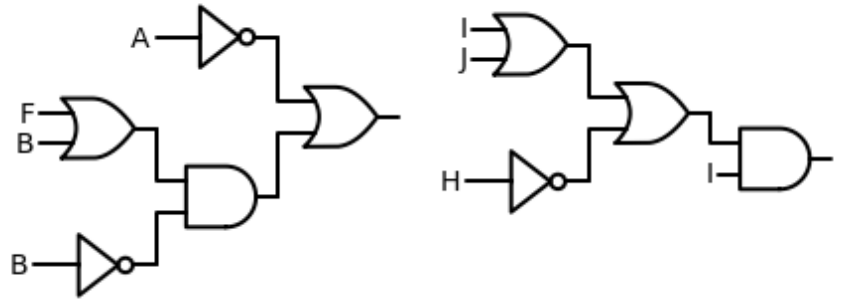

Locate your nine-digit student identification number in the table below and you will see the circuit schematics that have been assigned to you for Assignment 3. If you are unable to locate your student number below, then you must contact your instructor at robert.collier@scs.carleton.ca, ASAP and no later than Wednesday, October 6th by 11:59pm EST.

101220993	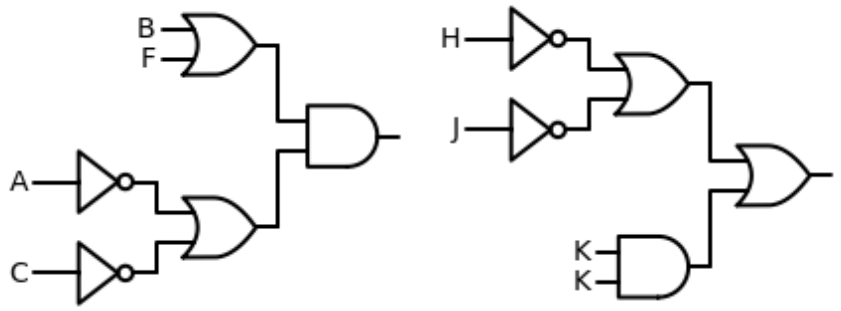
101221018	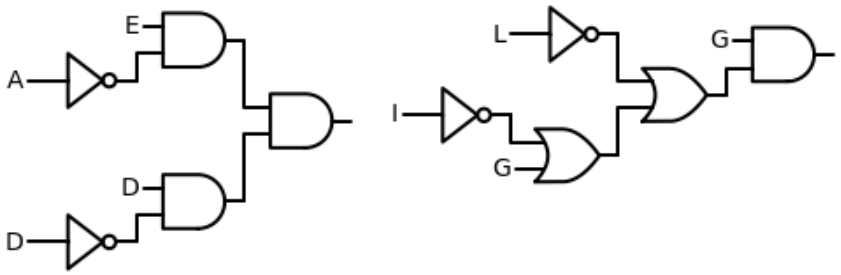
101221020	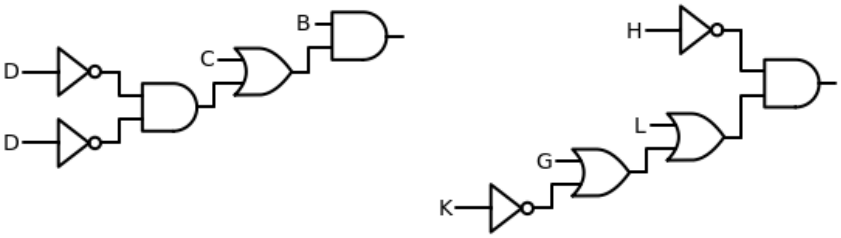
101221025	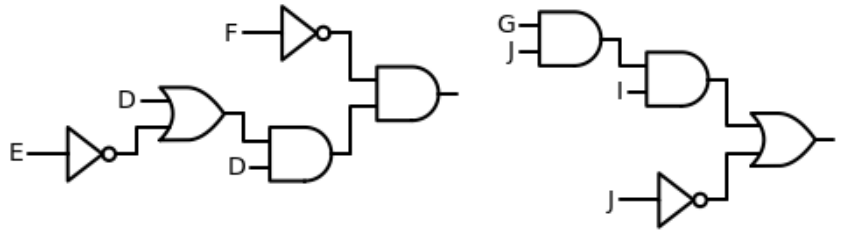
101221029	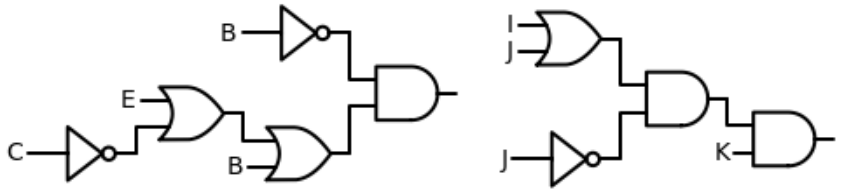

Locate your nine-digit student identification number in the table below and you will see the circuit schematics that have been assigned to you for Assignment 3. If you are unable to locate your student number below, then you must contact your instructor at robert.collier@scs.carleton.ca, ASAP and no later than Wednesday, October 6th by 11:59pm EST.

101221307	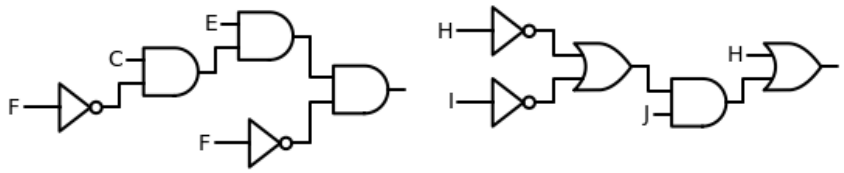
101221413	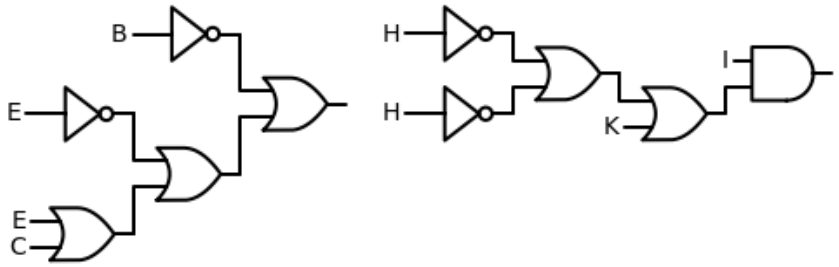
101221428	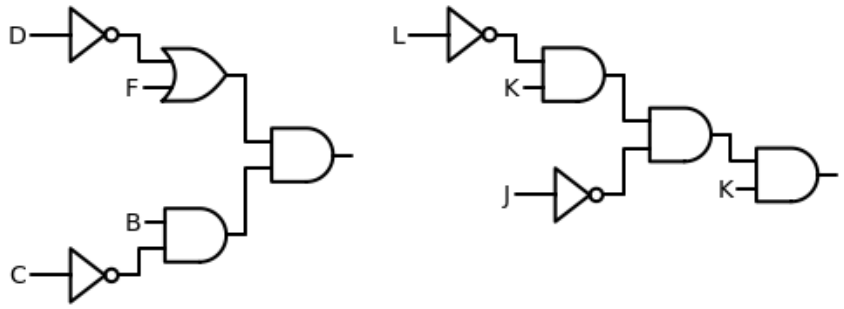
101221494	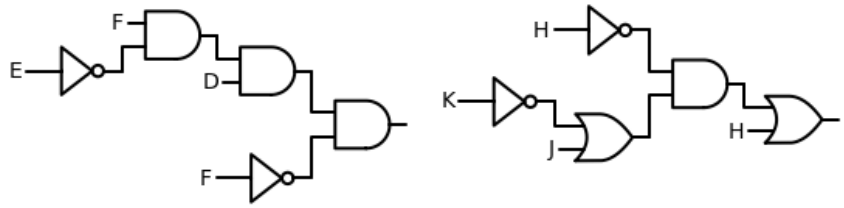
101221517	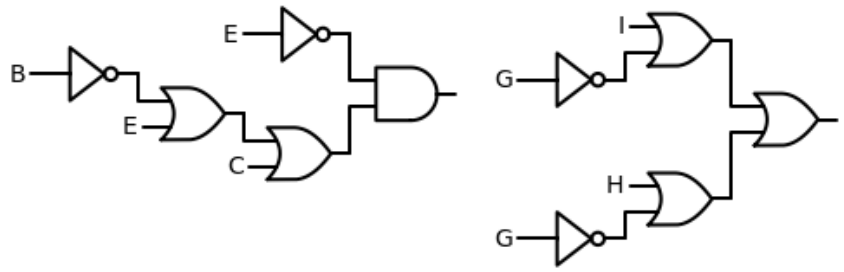

Locate your nine-digit student identification number in the table below and you will see the circuit schematics that have been assigned to you for Assignment 3. If you are unable to locate your student number below, then you must contact your instructor at robert.collier@scs.carleton.ca, ASAP and no later than Wednesday, October 6th by 11:59pm EST.

101221605	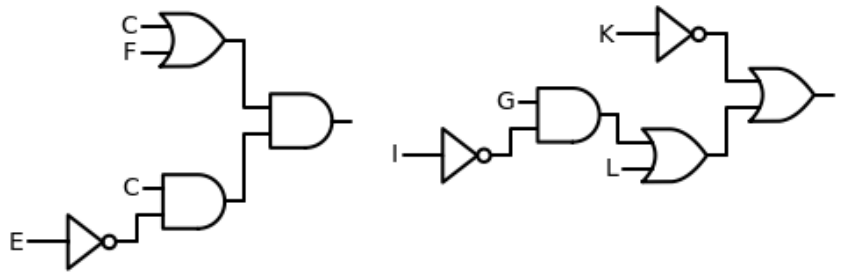
101221679	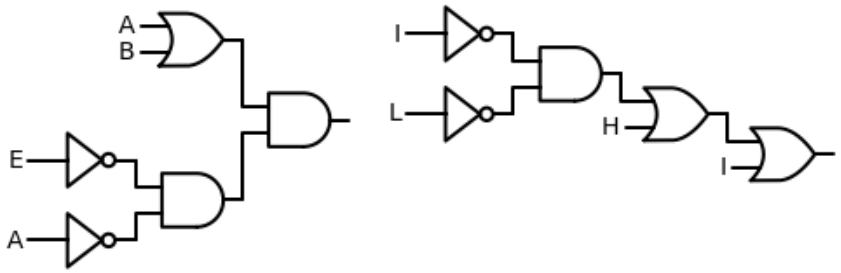
101221725	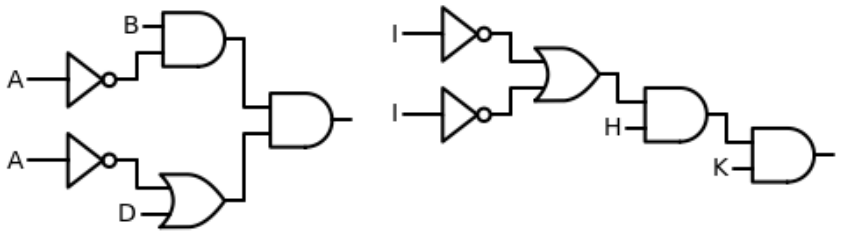
101221758	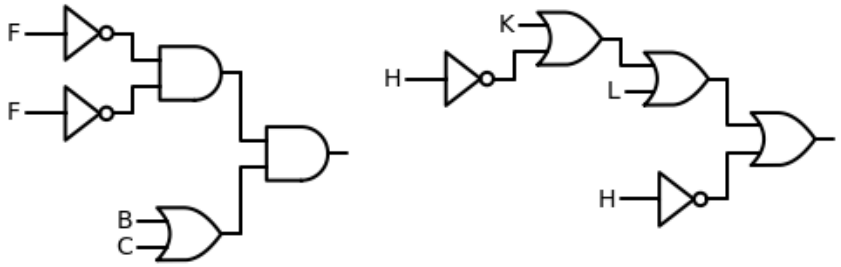

Locate your nine-digit student identification number in the table below and you will see the circuit schematics that have been assigned to you for Assignment 3. If you are unable to locate your student number below, then you must contact your instructor at robert.collier@scs.carleton.ca, ASAP and no later than Wednesday, October 6th by 11:59pm EST.

101221777	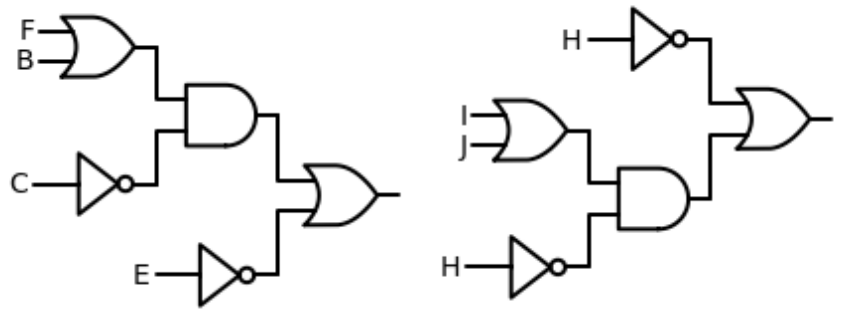
101222018	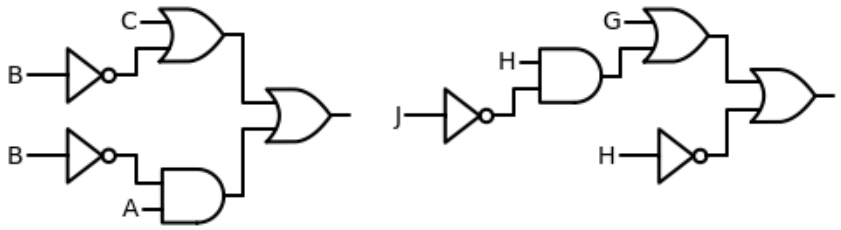
101222045	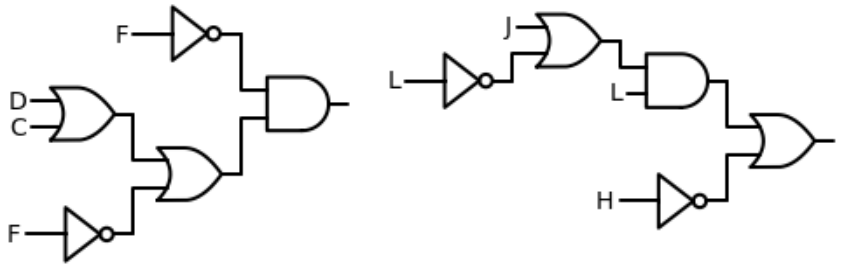
101222064	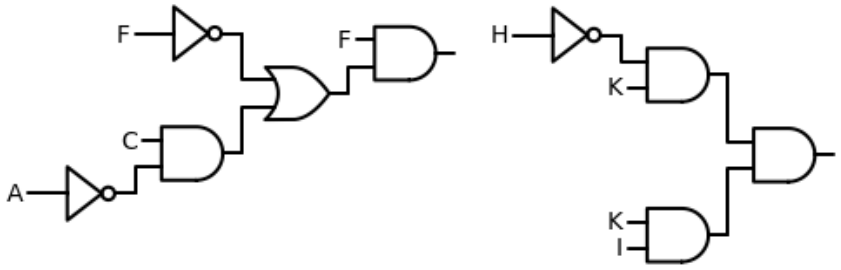

Locate your nine-digit student identification number in the table below and you will see the circuit schematics that have been assigned to you for Assignment 3. If you are unable to locate your student number below, then you must contact your instructor at robert.collier@scs.carleton.ca, ASAP and no later than Wednesday, October 6th by 11:59pm EST.

101222093	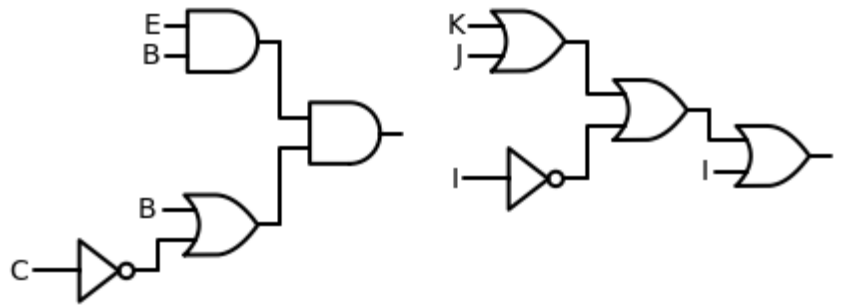
101222107	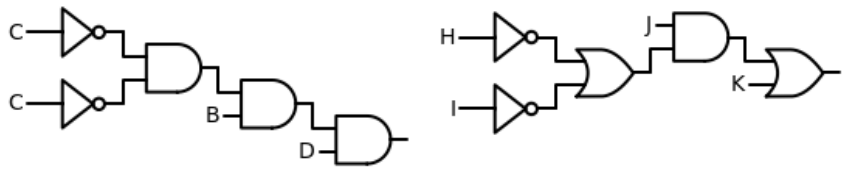
101222136	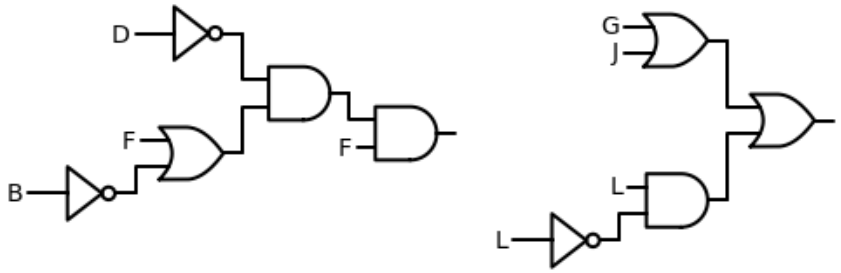
101222137	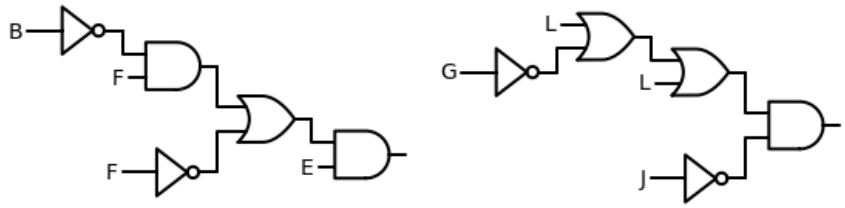
101222234	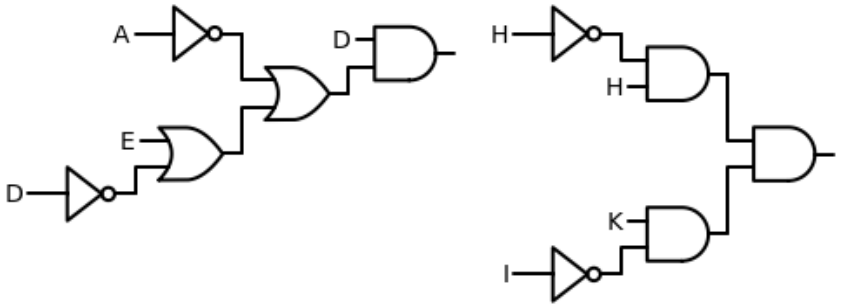

Locate your nine-digit student identification number in the table below and you will see the circuit schematics that have been assigned to you for Assignment 3. If you are unable to locate your student number below, then you must contact your instructor at robert.collier@scs.carleton.ca, ASAP and no later than Wednesday, October 6th by 11:59pm EST.

101222248	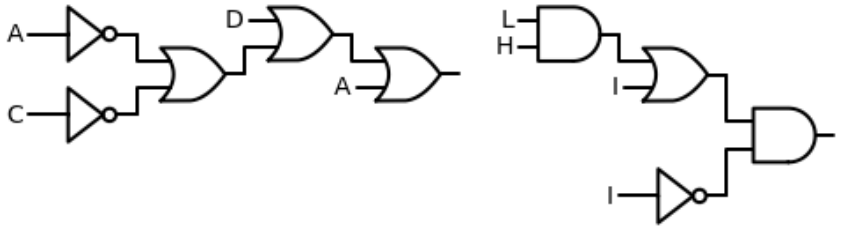
101222274	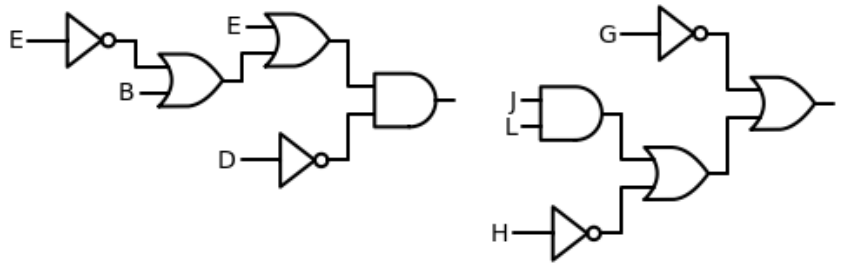
101222357	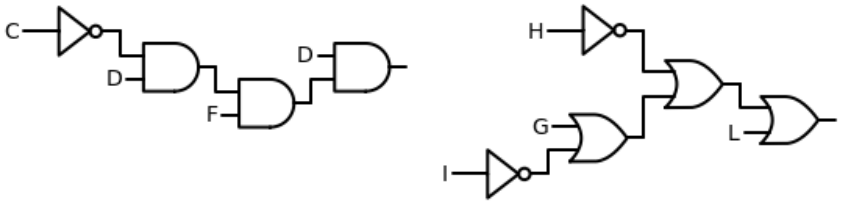
101222369	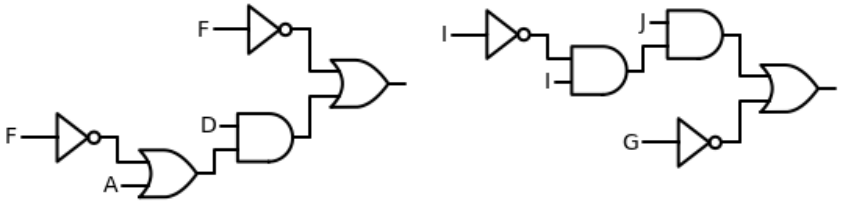
101222428	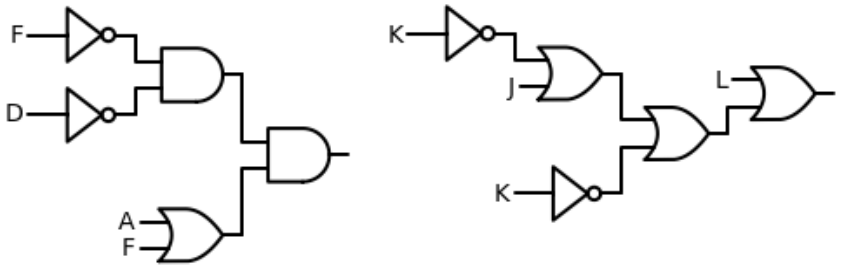

Locate your nine-digit student identification number in the table below and you will see the circuit schematics that have been assigned to you for Assignment 3. If you are unable to locate your student number below, then you must contact your instructor at robert.collier@scs.carleton.ca, ASAP and no later than Wednesday, October 6th by 11:59pm EST.

101222434	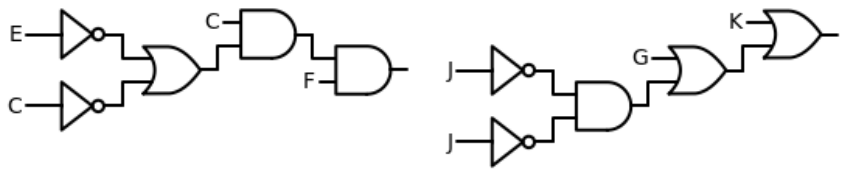
101222543	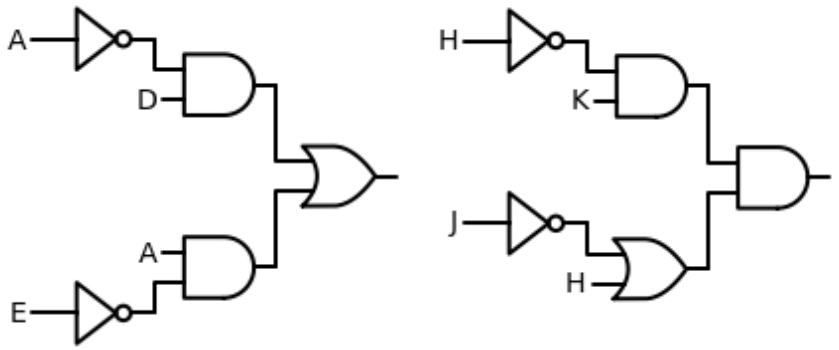
101222648	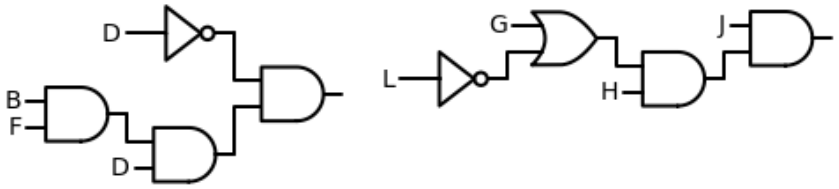
101222679	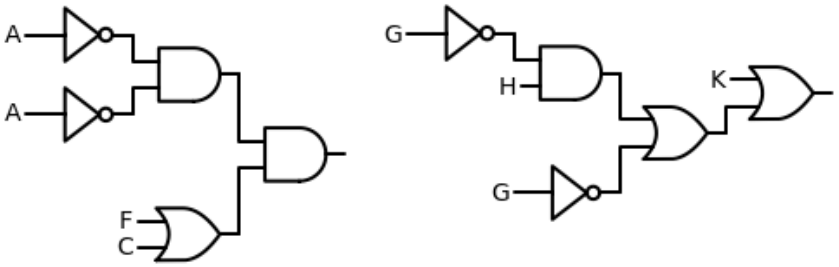
101222737	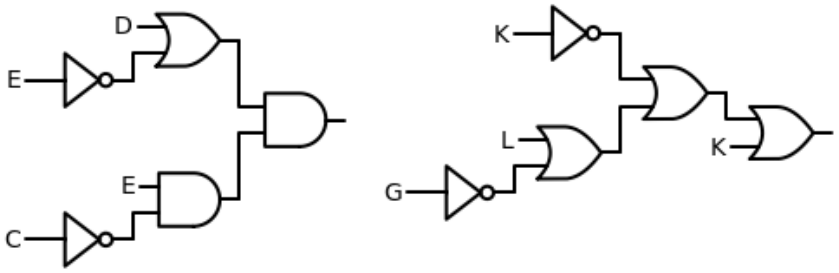

Locate your nine-digit student identification number in the table below and you will see the circuit schematics that have been assigned to you for Assignment 3. If you are unable to locate your student number below, then you must contact your instructor at robert.collier@scs.carleton.ca, ASAP and no later than Wednesday, October 6th by 11:59pm EST.

101222796	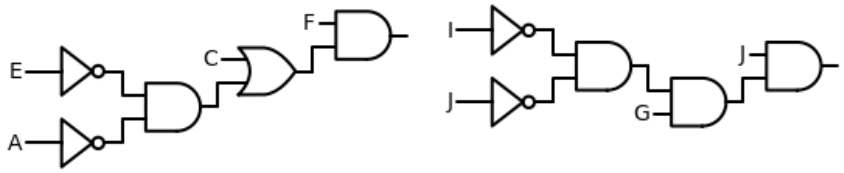
101222811	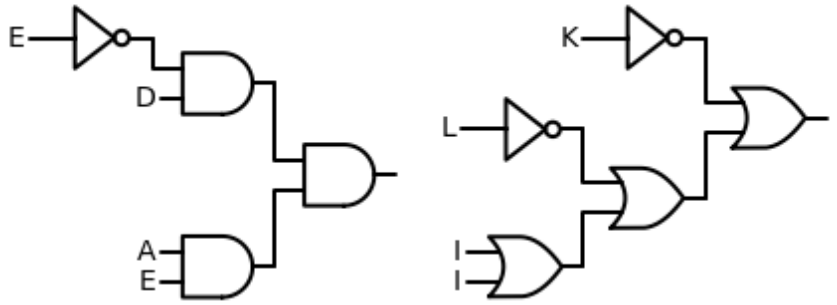
101222972	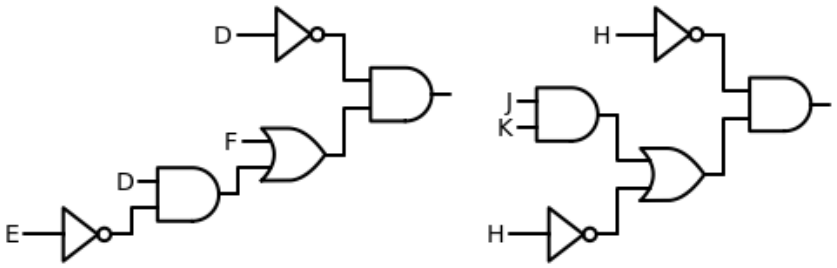
101223004	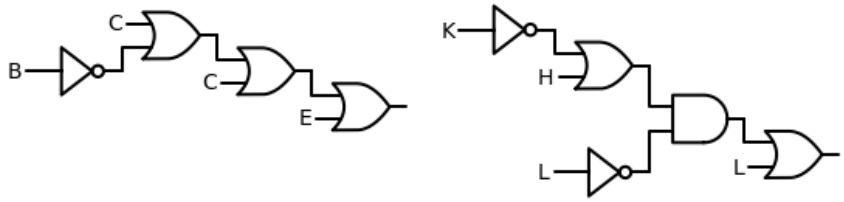
101223087	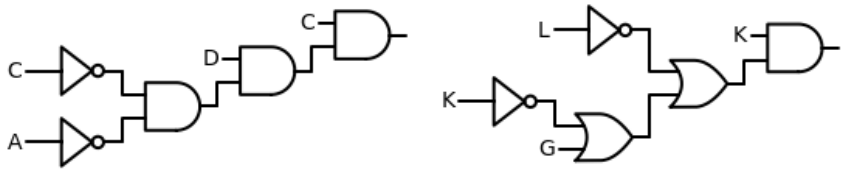

Locate your nine-digit student identification number in the table below and you will see the circuit schematics that have been assigned to you for Assignment 3. If you are unable to locate your student number below, then you must contact your instructor at robert.collier@scs.carleton.ca, ASAP and no later than Wednesday, October 6th by 11:59pm EST.

101223210	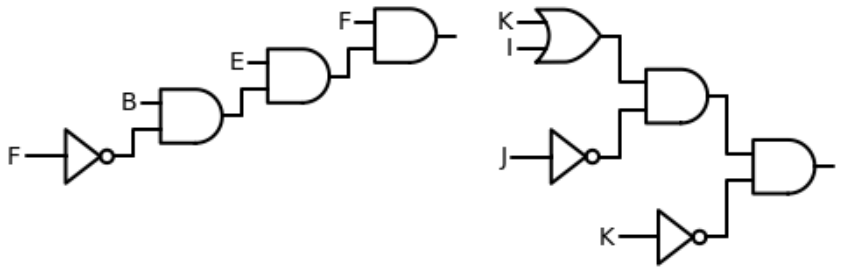
101223231	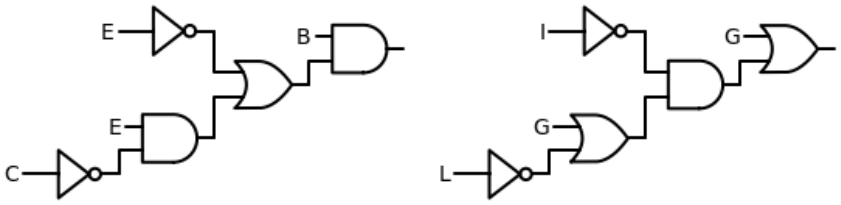
101223241	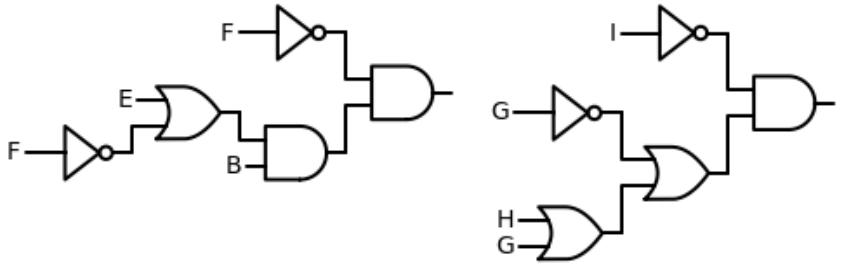
101223290	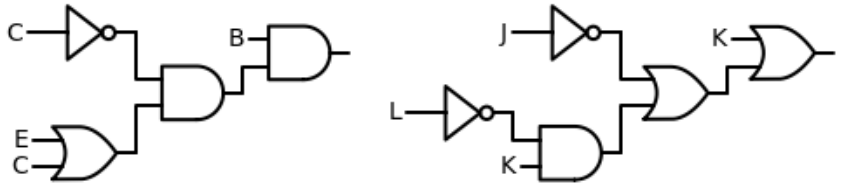
101223291	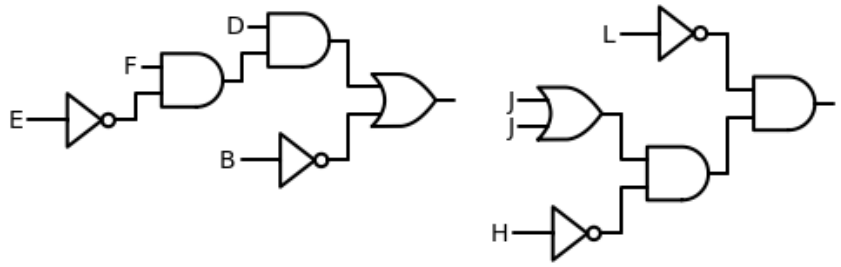

Locate your nine-digit student identification number in the table below and you will see the circuit schematics that have been assigned to you for Assignment 3. If you are unable to locate your student number below, then you must contact your instructor at robert.collier@scs.carleton.ca, ASAP and no later than Wednesday, October 6th by 11:59pm EST.

101223315	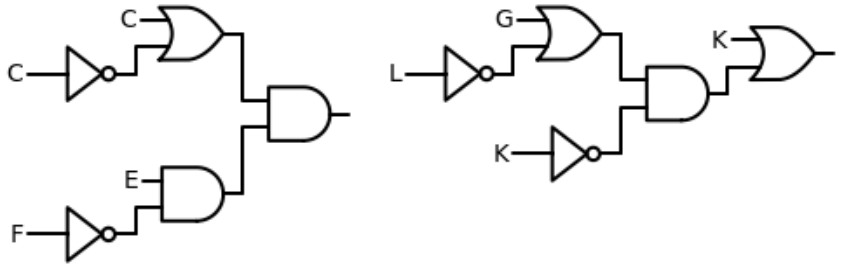
101223320	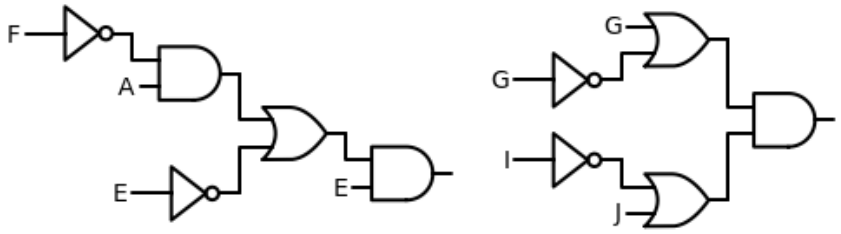
101223464	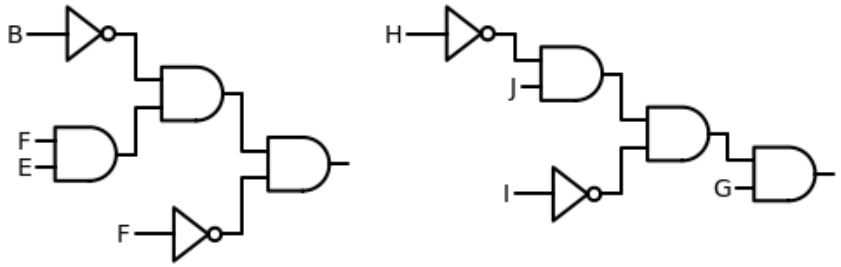
101223551	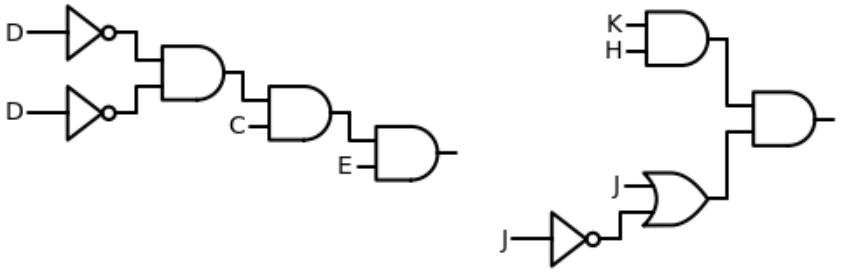
101223876	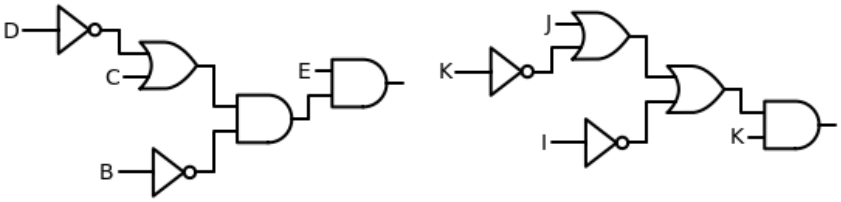

Locate your nine-digit student identification number in the table below and you will see the circuit schematics that have been assigned to you for Assignment 3. If you are unable to locate your student number below, then you must contact your instructor at robert.collier@scs.carleton.ca, ASAP and no later than Wednesday, October 6th by 11:59pm EST.

101223924	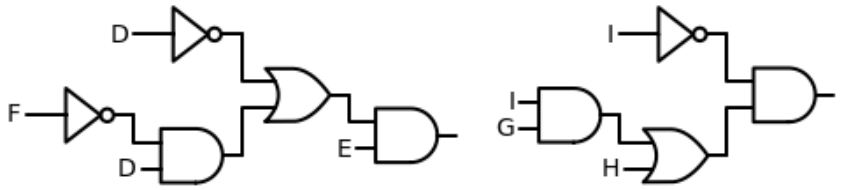
101224024	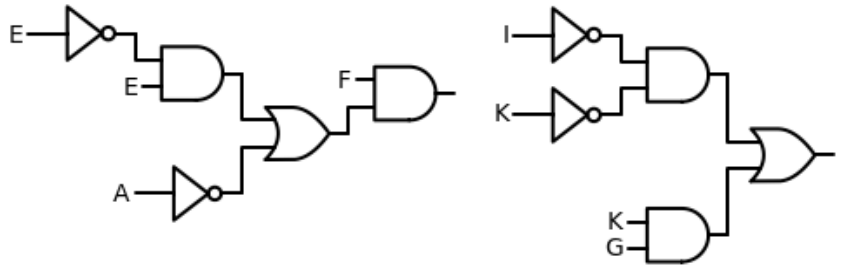
101224057	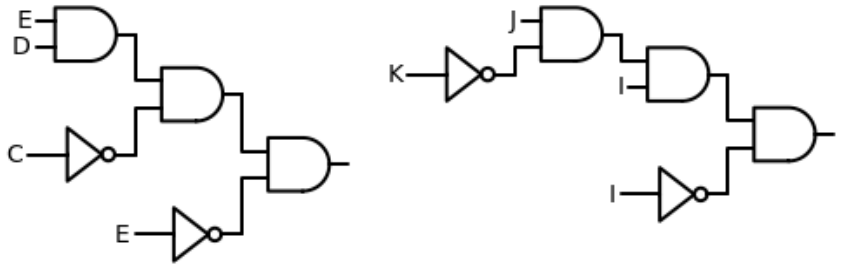
101224068	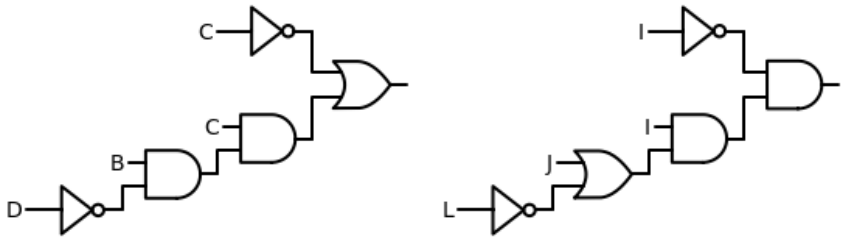

Locate your nine-digit student identification number in the table below and you will see the circuit schematics that have been assigned to you for Assignment 3. If you are unable to locate your student number below, then you must contact your instructor at robert.collier@scs.carleton.ca, ASAP and no later than Wednesday, October 6th by 11:59pm EST.

101224082	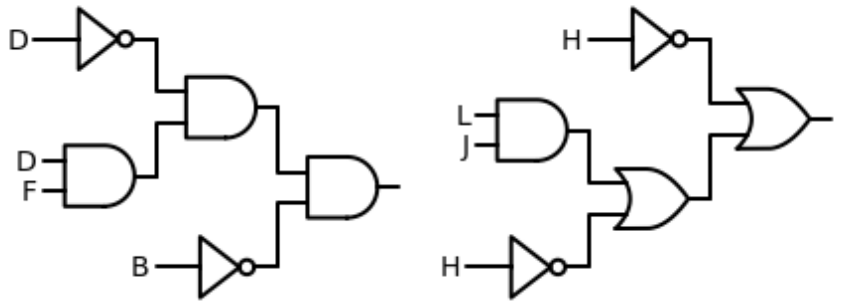
101224091	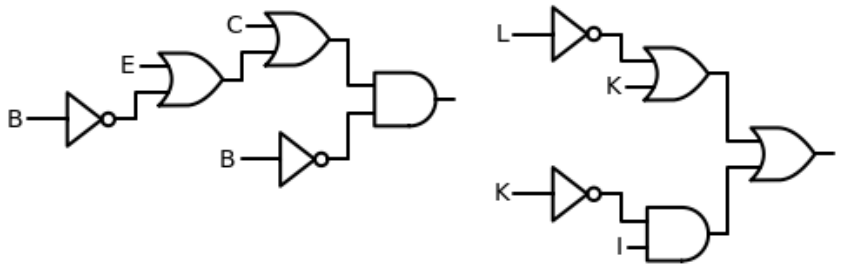
101224133	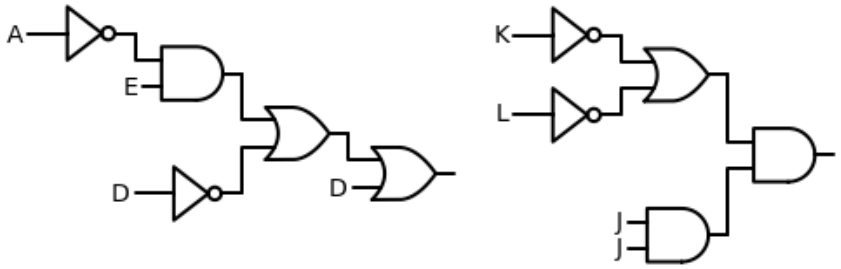
101224156	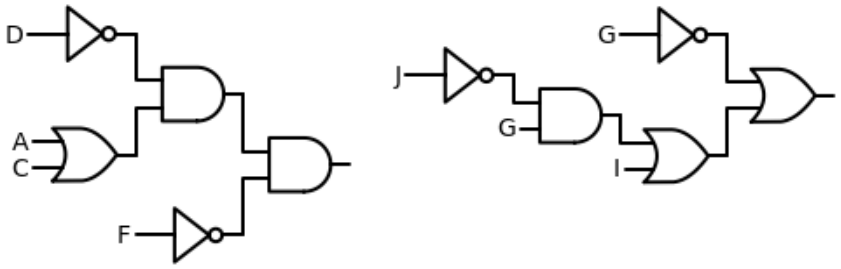

Locate your nine-digit student identification number in the table below and you will see the circuit schematics that have been assigned to you for Assignment 3. If you are unable to locate your student number below, then you must contact your instructor at robert.collier@scs.carleton.ca, ASAP and no later than Wednesday, October 6th by 11:59pm EST.

101224158	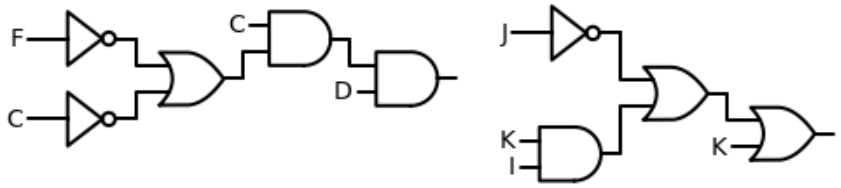
101224179	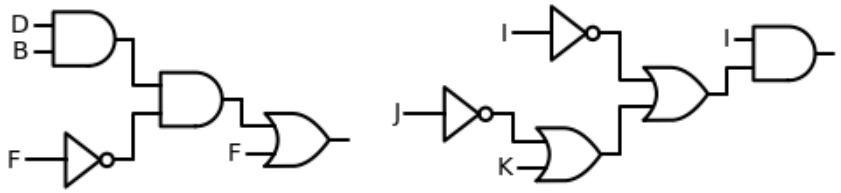
101224191	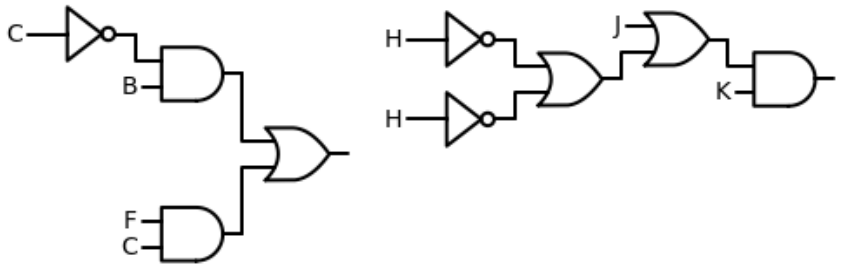
101224240	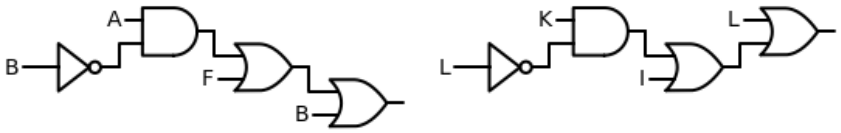
101224275	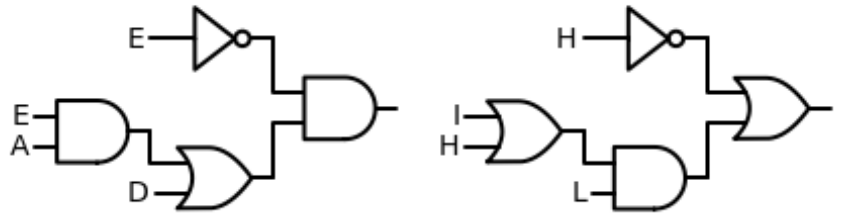
101224317	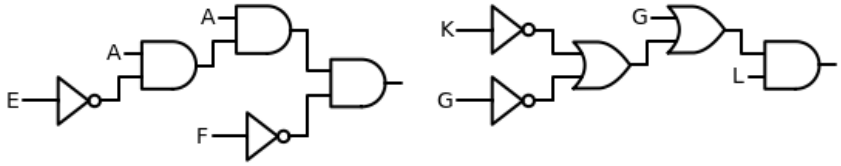

Locate your nine-digit student identification number in the table below and you will see the circuit schematics that have been assigned to you for Assignment 3. If you are unable to locate your student number below, then you must contact your instructor at robert.collier@scs.carleton.ca, ASAP and no later than Wednesday, October 6th by 11:59pm EST.

101224375	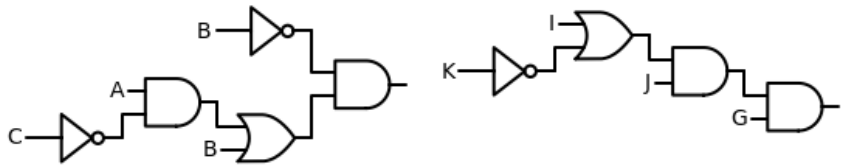
101224388	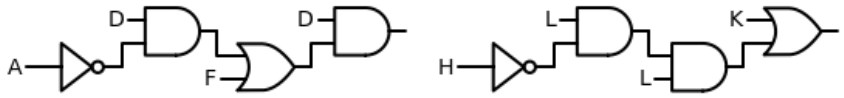
101224394	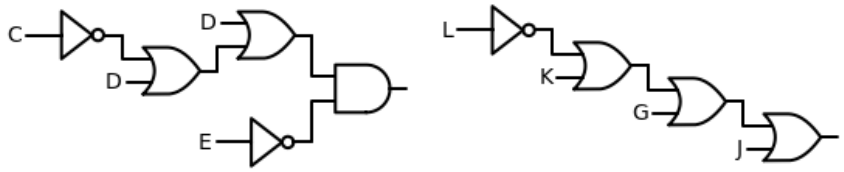
101224405	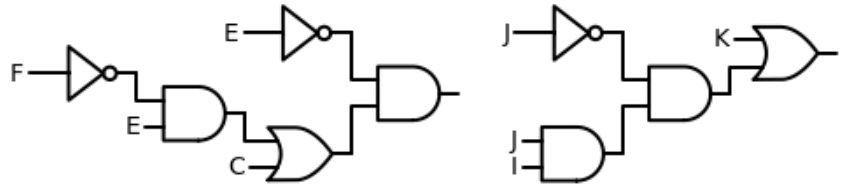
101224607	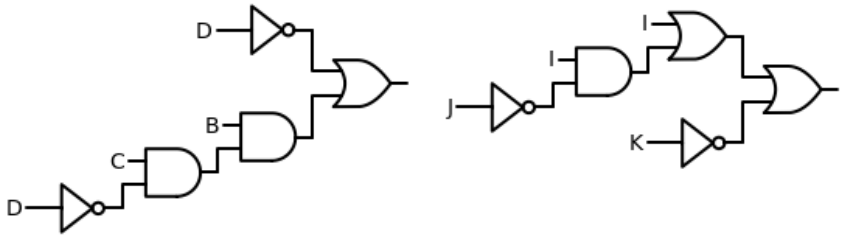
101224733	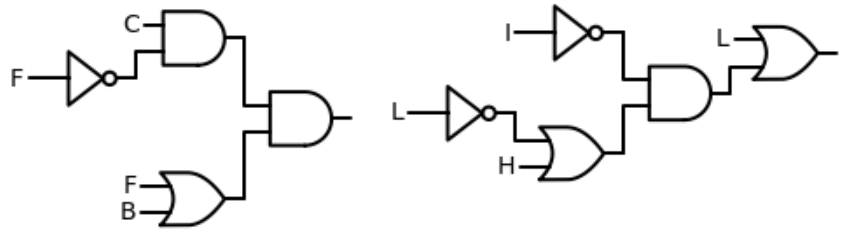

Locate your nine-digit student identification number in the table below and you will see the circuit schematics that have been assigned to you for Assignment 3. If you are unable to locate your student number below, then you must contact your instructor at robert.collier@scs.carleton.ca, ASAP and no later than Wednesday, October 6th by 11:59pm EST.

101224771	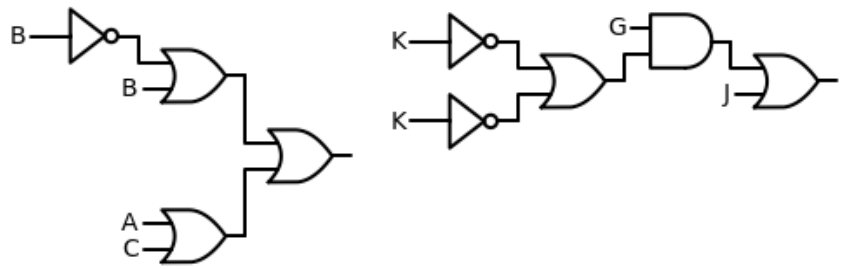
101224903	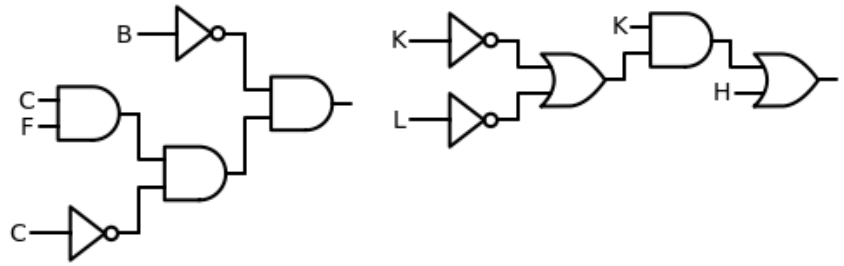
101224976	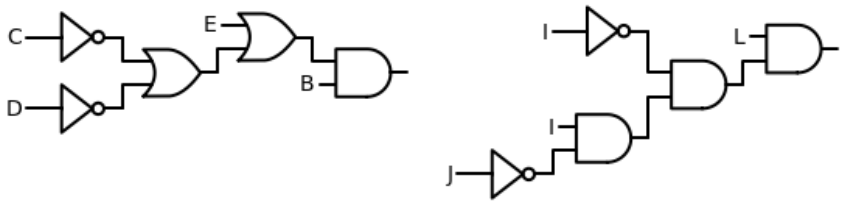
101224988	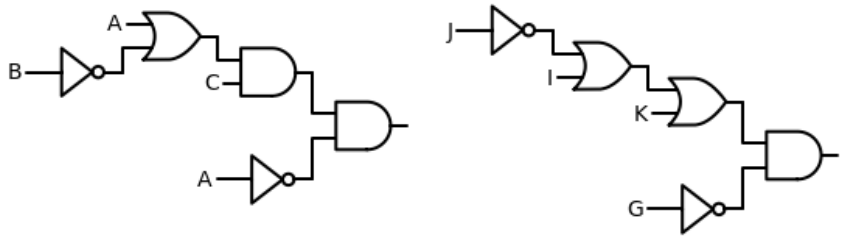
101225013	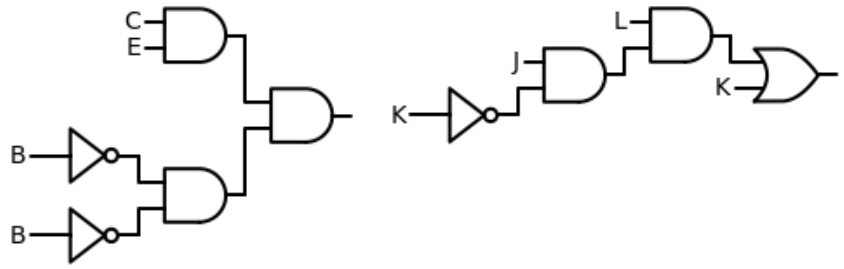

Locate your nine-digit student identification number in the table below and you will see the circuit schematics that have been assigned to you for Assignment 3. If you are unable to locate your student number below, then you must contact your instructor at robert.collier@scs.carleton.ca, ASAP and no later than Wednesday, October 6th by 11:59pm EST.

101225457	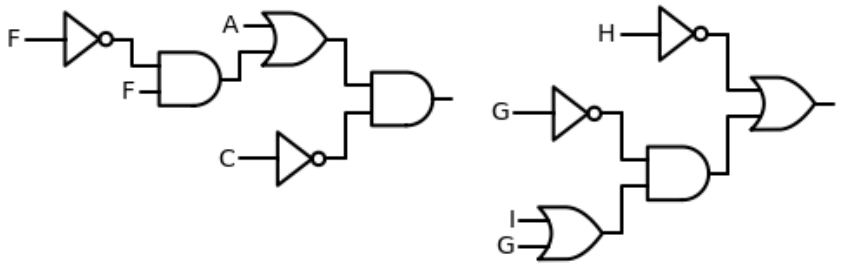
101225514	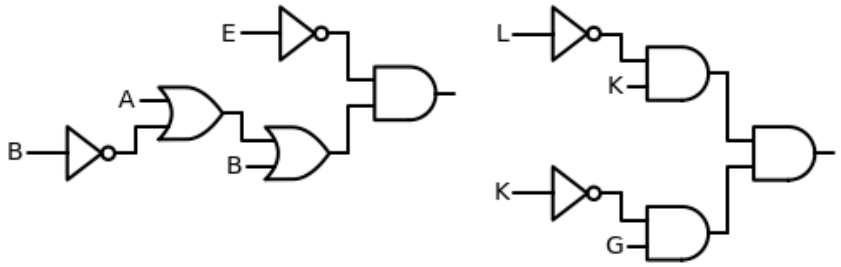
101225598	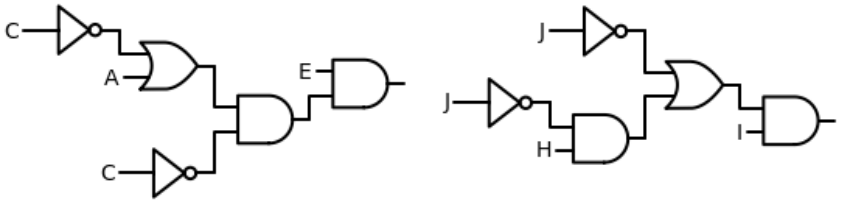
101225611	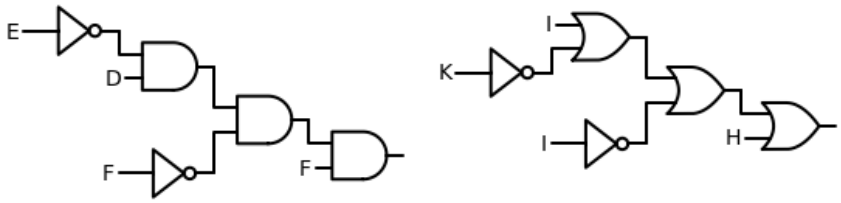
101225618	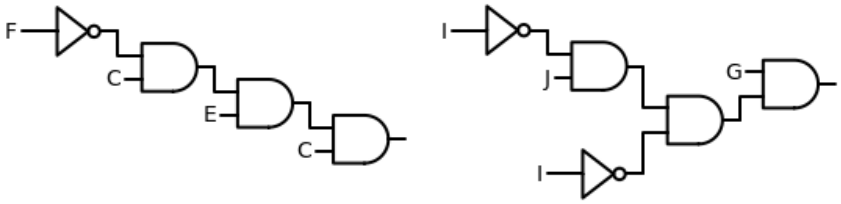

Locate your nine-digit student identification number in the table below and you will see the circuit schematics that have been assigned to you for Assignment 3. If you are unable to locate your student number below, then you must contact your instructor at robert.collier@scs.carleton.ca, ASAP and no later than Wednesday, October 6th by 11:59pm EST.

101225637	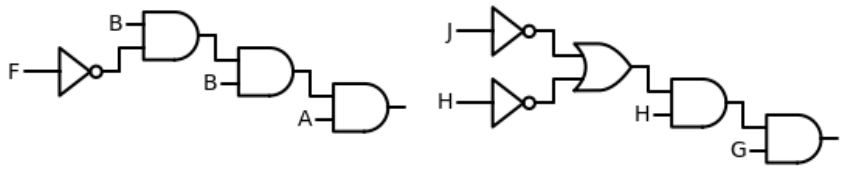
101225641	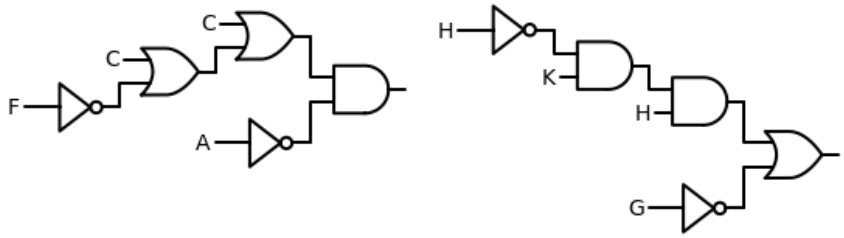
101225763	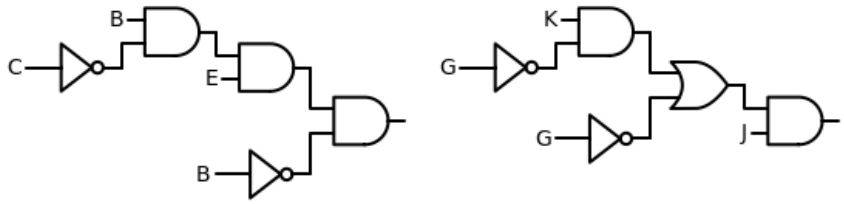
101225811	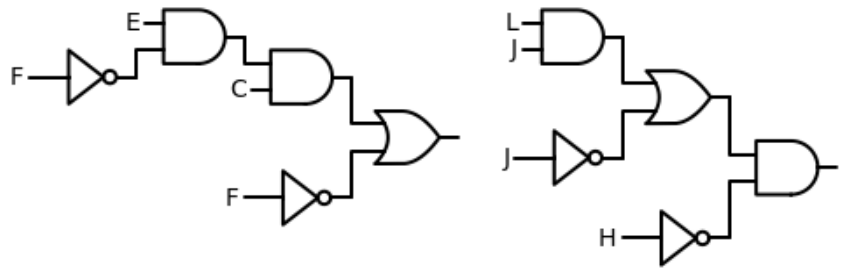
101225819	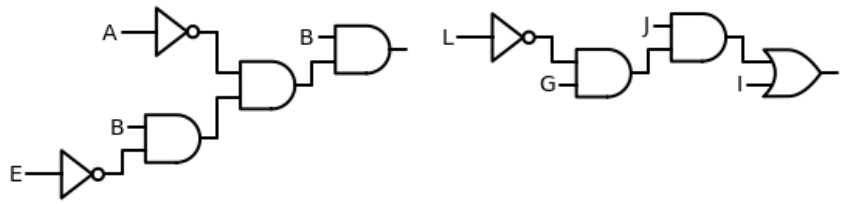

Locate your nine-digit student identification number in the table below and you will see the circuit schematics that have been assigned to you for Assignment 3. If you are unable to locate your student number below, then you must contact your instructor at robert.collier@scs.carleton.ca, ASAP and no later than Wednesday, October 6th by 11:59pm EST.

101225852	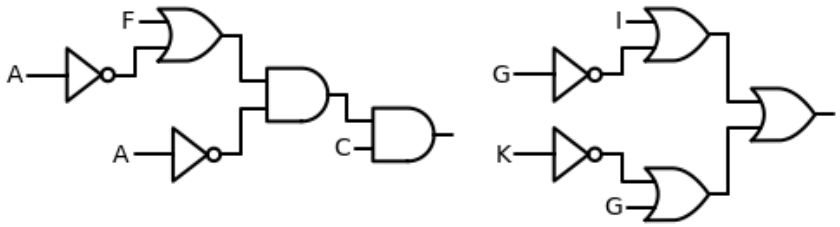
101225857	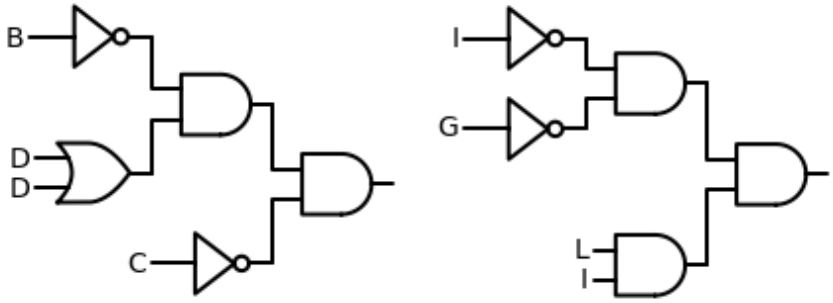
101225858	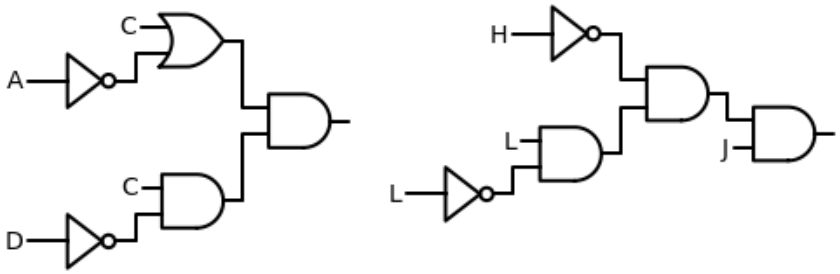
101225868	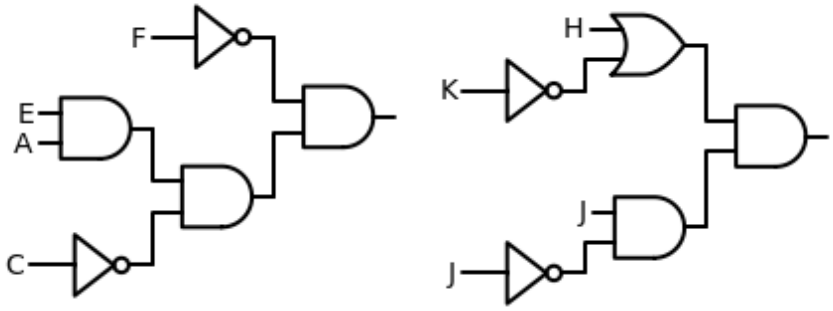

Locate your nine-digit student identification number in the table below and you will see the circuit schematics that have been assigned to you for Assignment 3. If you are unable to locate your student number below, then you must contact your instructor at robert.collier@scs.carleton.ca, ASAP and no later than Wednesday, October 6th by 11:59pm EST.

101225905	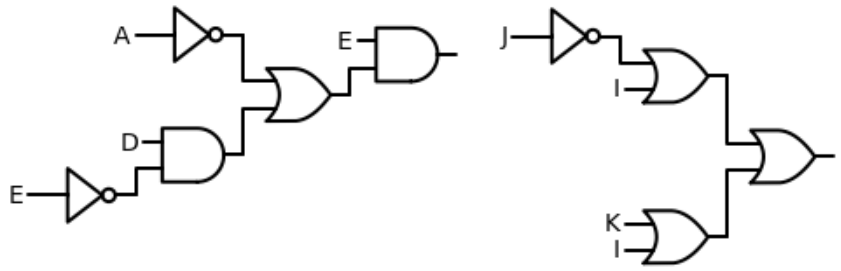
101226315	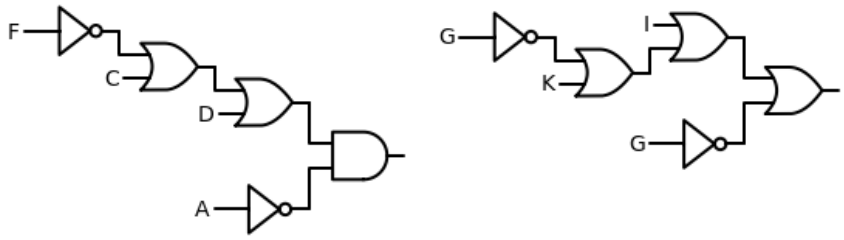
101226363	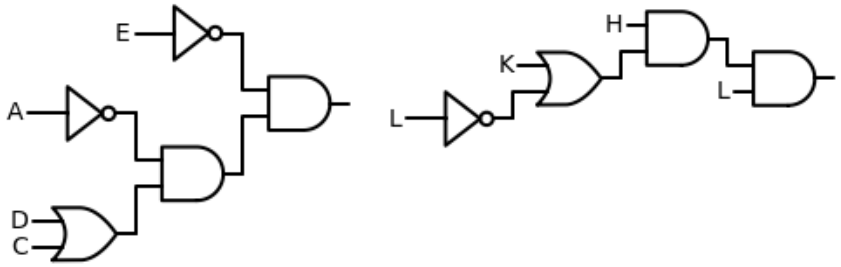
101226419	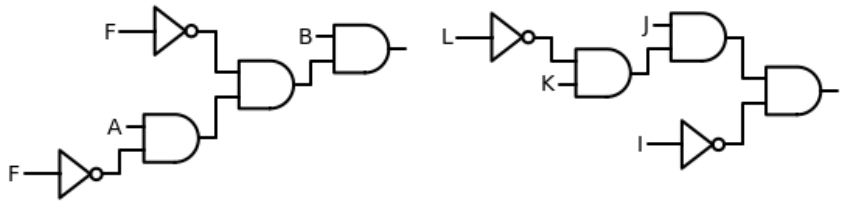
101226510	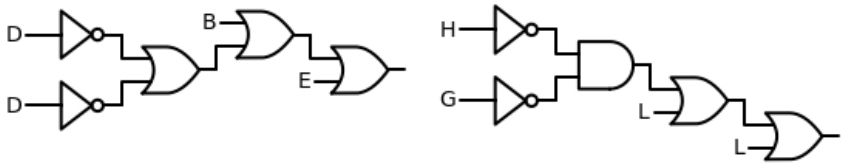

Locate your nine-digit student identification number in the table below and you will see the circuit schematics that have been assigned to you for Assignment 3. If you are unable to locate your student number below, then you must contact your instructor at robert.collier@scs.carleton.ca, ASAP and no later than Wednesday, October 6th by 11:59pm EST.

101226529	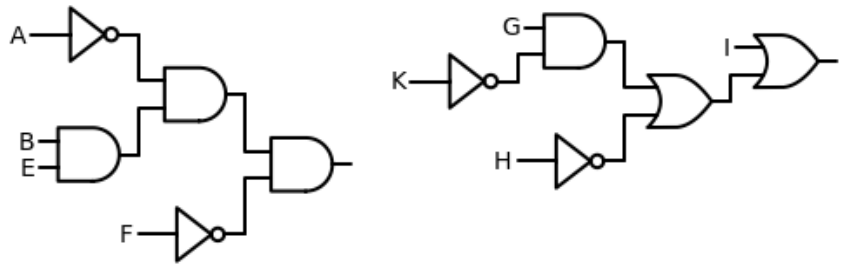
101226575	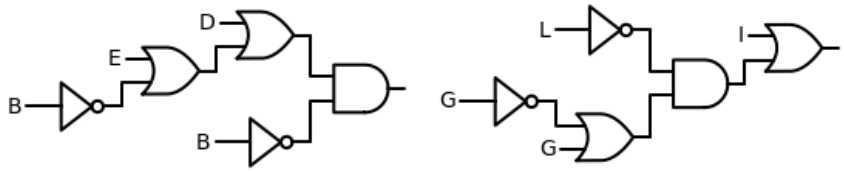
101226668	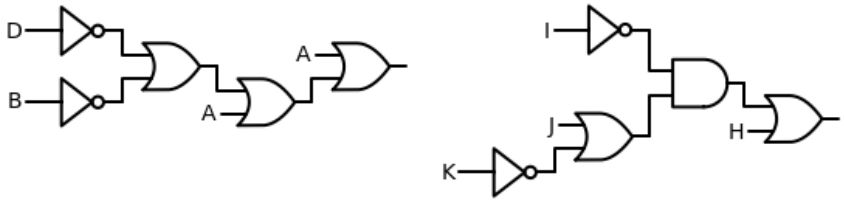
101226679	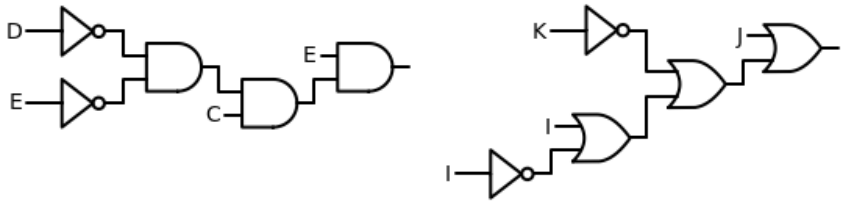
101226752	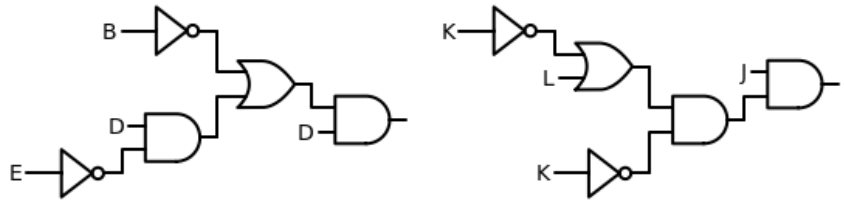

Locate your nine-digit student identification number in the table below and you will see the circuit schematics that have been assigned to you for Assignment 3. If you are unable to locate your student number below, then you must contact your instructor at robert.collier@scs.carleton.ca, ASAP and no later than Wednesday, October 6th by 11:59pm EST.

101226755	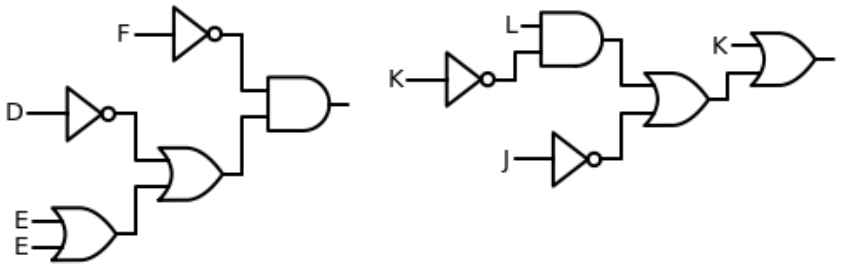
101226809	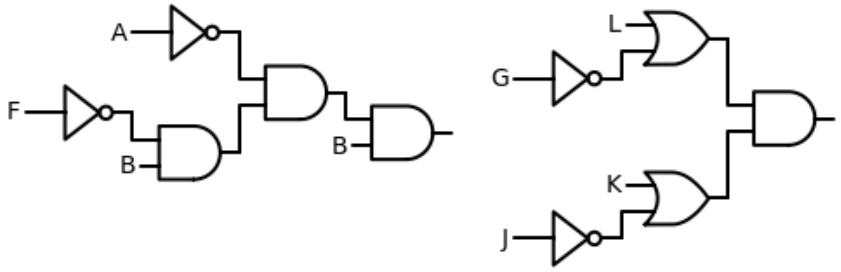
101226835	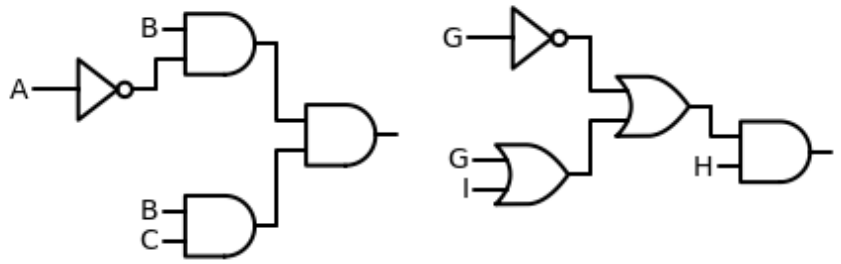
101226905	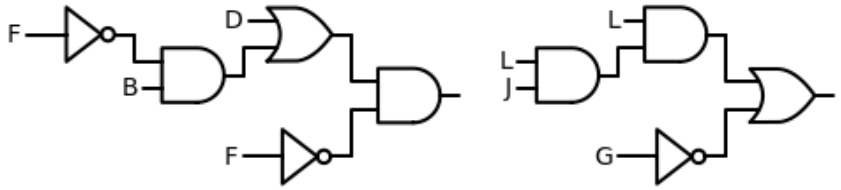

Locate your nine-digit student identification number in the table below and you will see the circuit schematics that have been assigned to you for Assignment 3. If you are unable to locate your student number below, then you must contact your instructor at robert.collier@scs.carleton.ca, ASAP and no later than Wednesday, October 6th by 11:59pm EST.

101226914	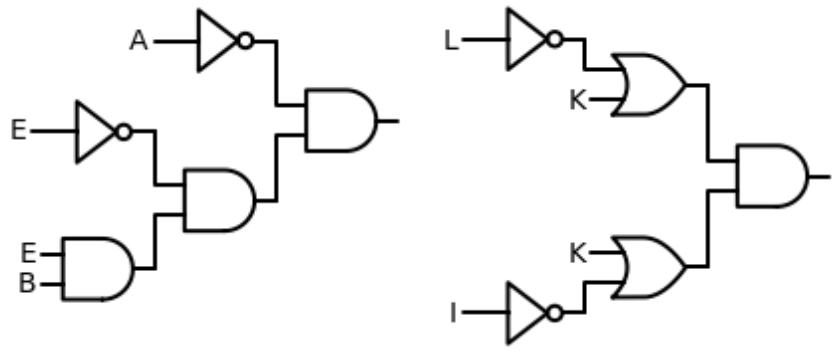
101226977	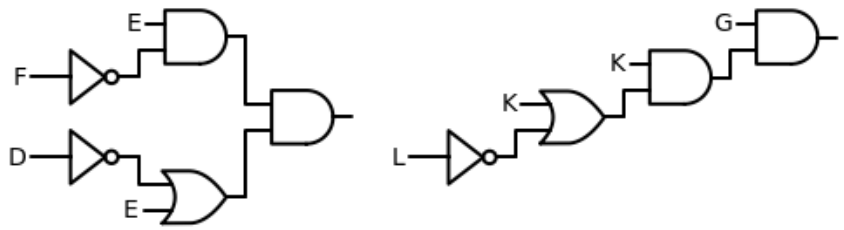
101226991	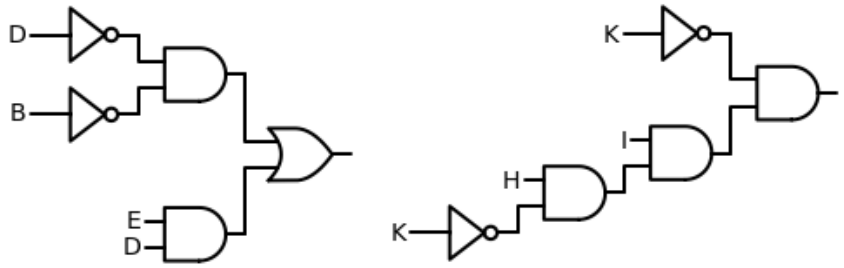
101227203	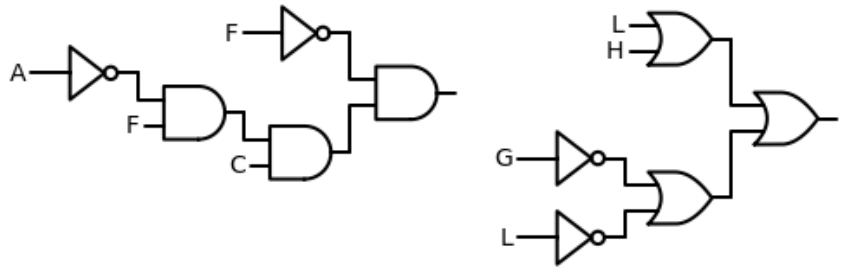

Locate your nine-digit student identification number in the table below and you will see the circuit schematics that have been assigned to you for Assignment 3. If you are unable to locate your student number below, then you must contact your instructor at robert.collier@scs.carleton.ca, ASAP and no later than Wednesday, October 6th by 11:59pm EST.

101227263	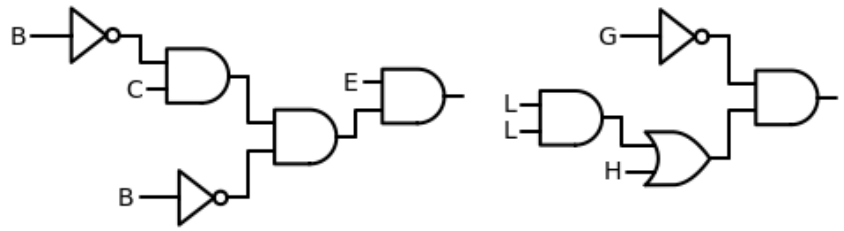
101227266	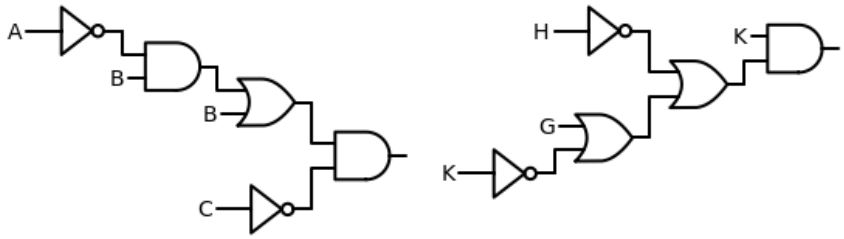
101227269	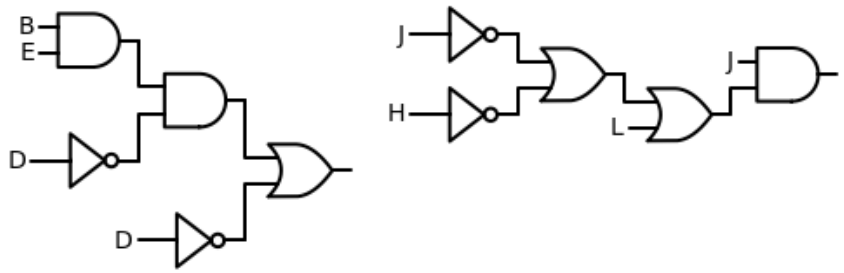
101227324	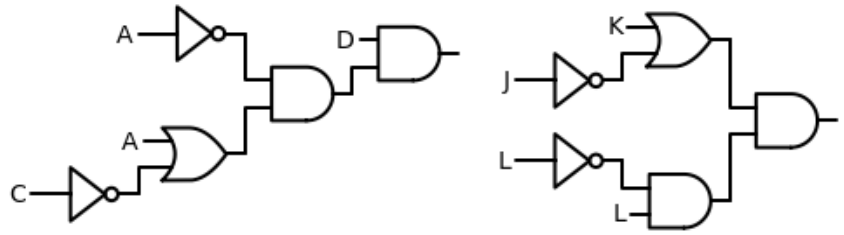
101227401	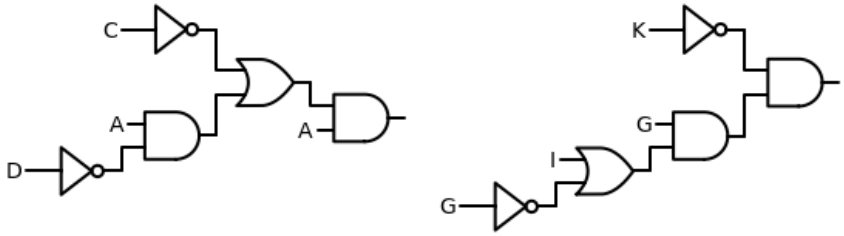

Locate your nine-digit student identification number in the table below and you will see the circuit schematics that have been assigned to you for Assignment 3. If you are unable to locate your student number below, then you must contact your instructor at robert.collier@scs.carleton.ca, ASAP and no later than Wednesday, October 6th by 11:59pm EST.

101227411	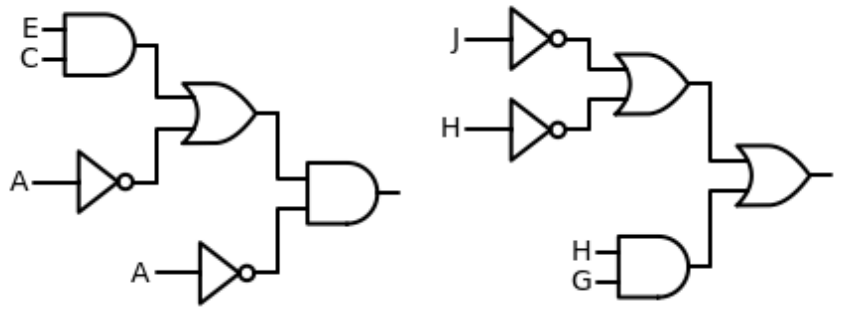
101227444	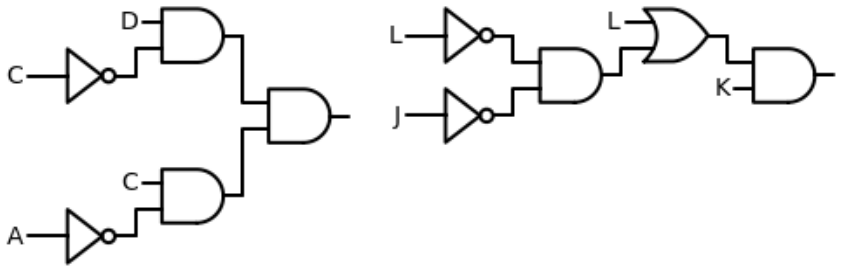
101227580	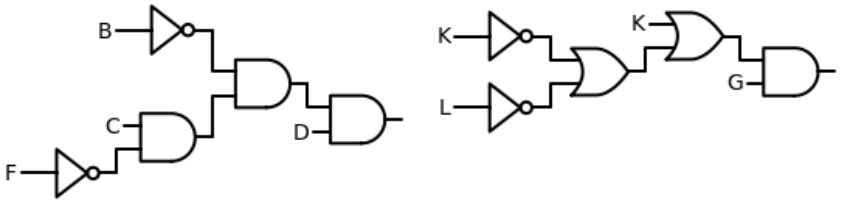
101227601	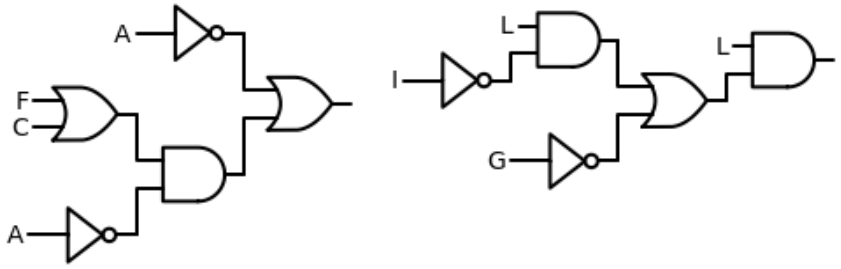
101227616	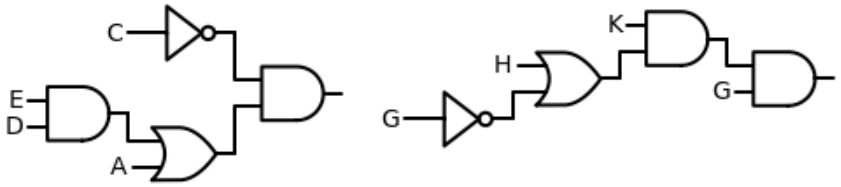

Locate your nine-digit student identification number in the table below and you will see the circuit schematics that have been assigned to you for Assignment 3. If you are unable to locate your student number below, then you must contact your instructor at robert.collier@scs.carleton.ca, ASAP and no later than Wednesday, October 6th by 11:59pm EST.

101227689	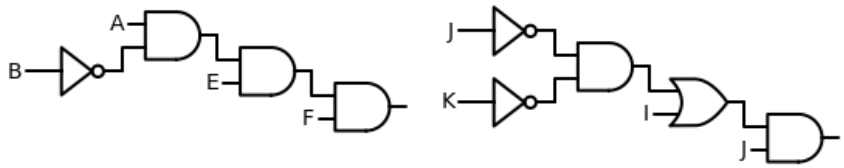
101227773	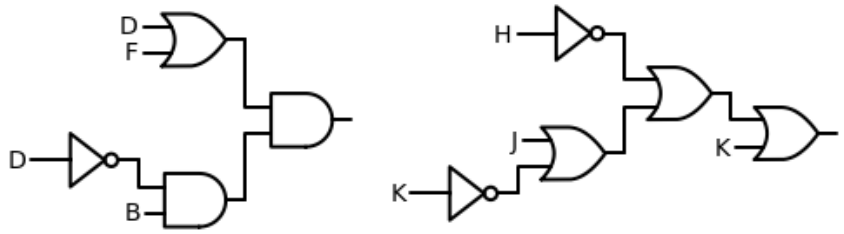
101227778	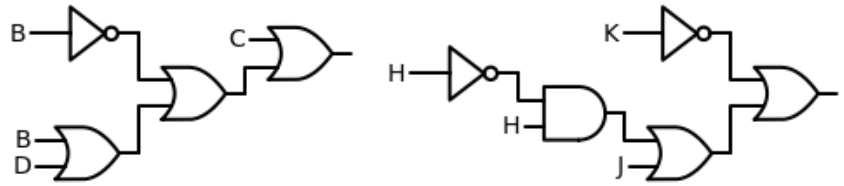
101227786	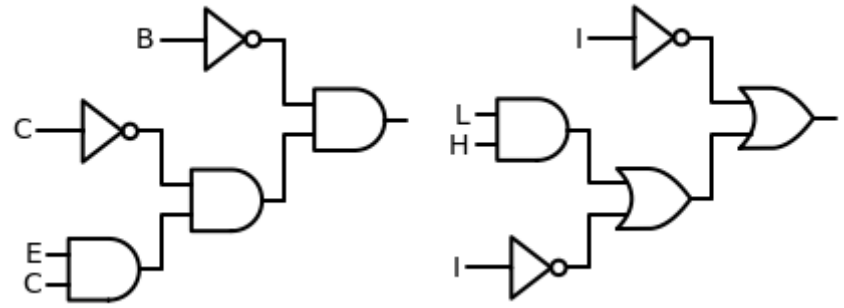
101227787	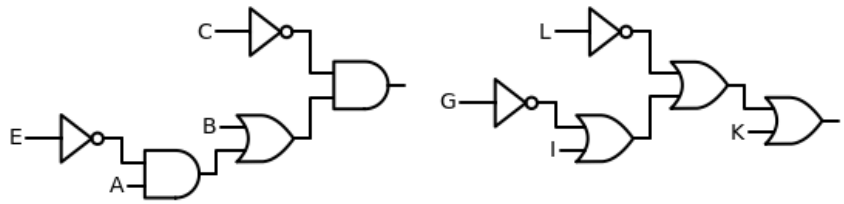

Locate your nine-digit student identification number in the table below and you will see the circuit schematics that have been assigned to you for Assignment 3. If you are unable to locate your student number below, then you must contact your instructor at robert.collier@scs.carleton.ca, ASAP and no later than Wednesday, October 6th by 11:59pm EST.

101227864	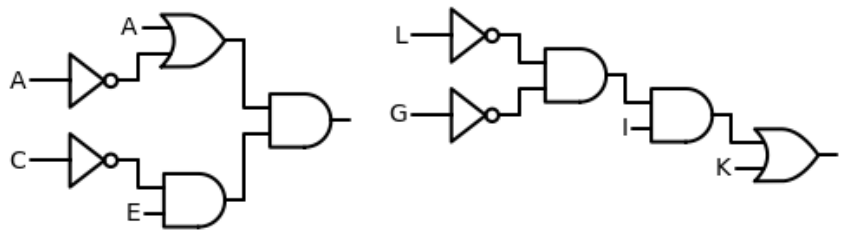
101227871	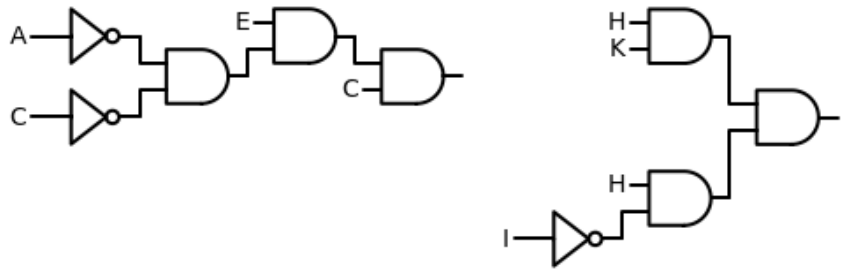
101227963	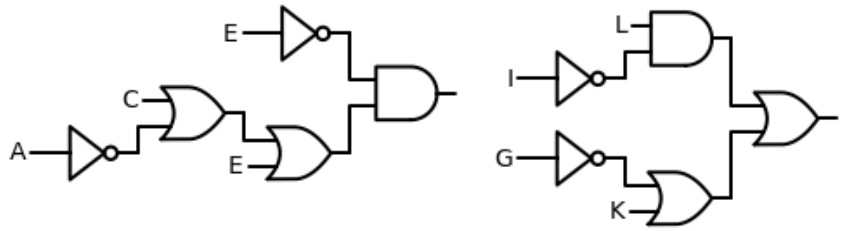
101227971	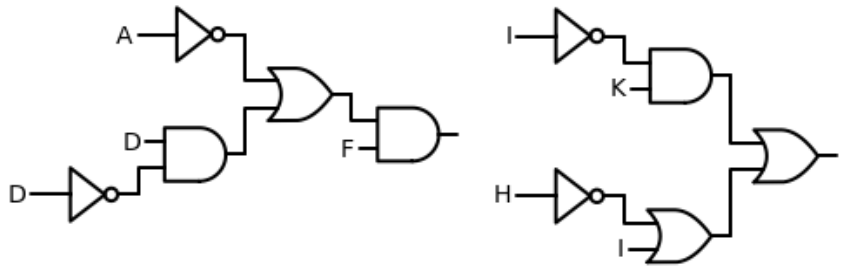

Locate your nine-digit student identification number in the table below and you will see the circuit schematics that have been assigned to you for Assignment 3. If you are unable to locate your student number below, then you must contact your instructor at robert.collier@scs.carleton.ca, ASAP and no later than Wednesday, October 6th by 11:59pm EST.

101228049	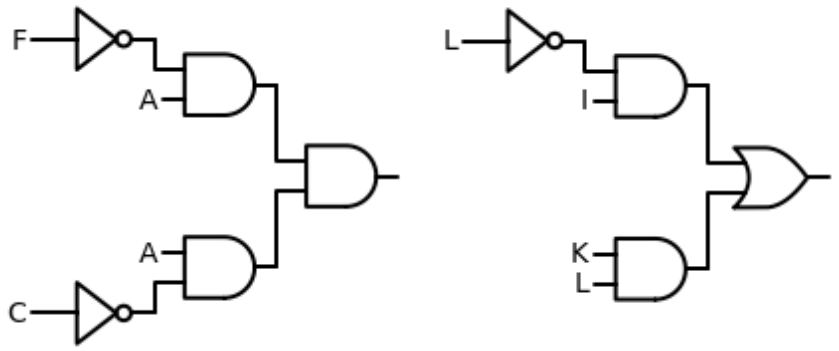
101228053	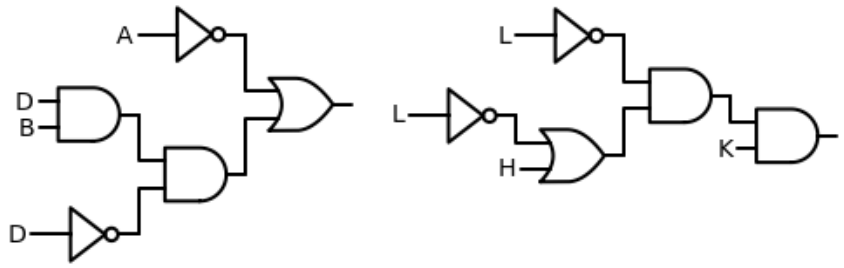
101228092	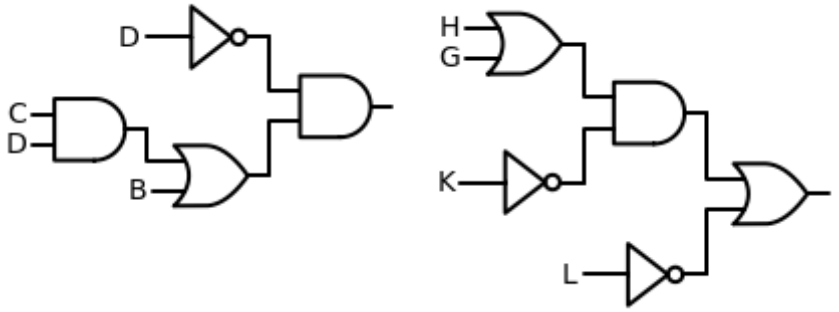
101228105	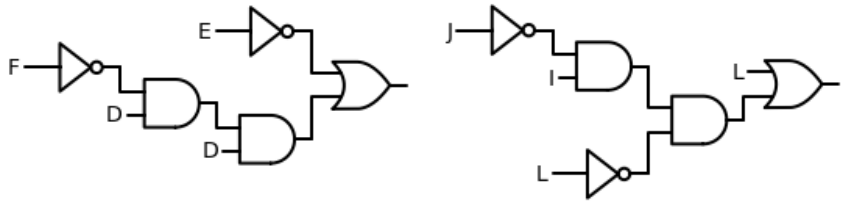

Locate your nine-digit student identification number in the table below and you will see the circuit schematics that have been assigned to you for Assignment 3. If you are unable to locate your student number below, then you must contact your instructor at robert.collier@scs.carleton.ca, ASAP and no later than Wednesday, October 6th by 11:59pm EST.

101228165	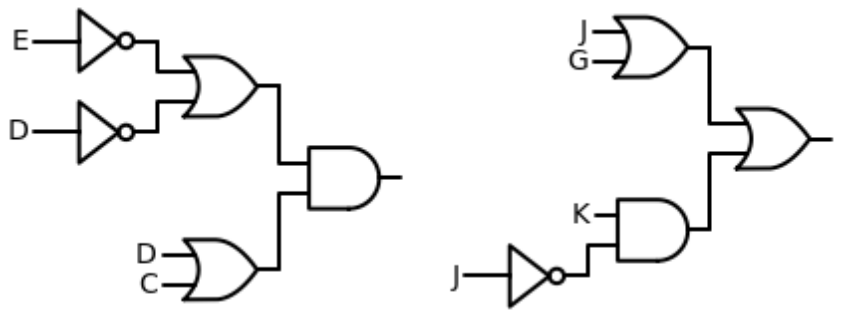
101228231	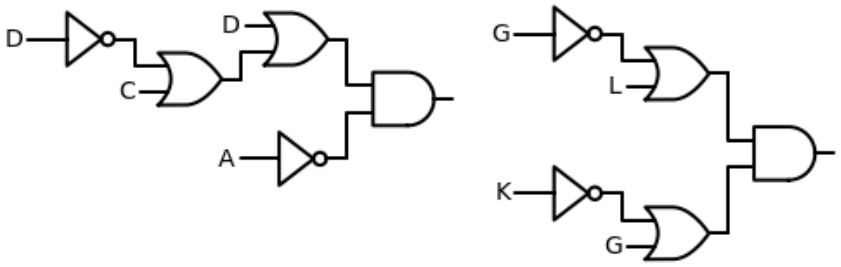
101228239	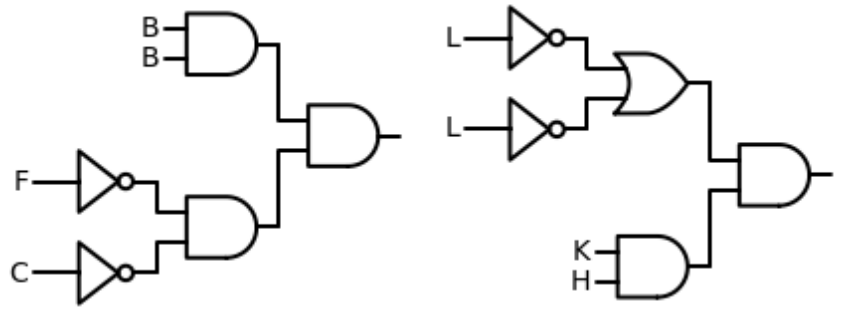
101228349	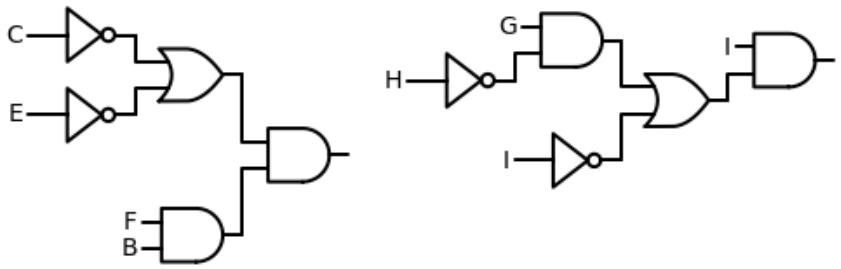

Locate your nine-digit student identification number in the table below and you will see the circuit schematics that have been assigned to you for Assignment 3. If you are unable to locate your student number below, then you must contact your instructor at robert.collier@scs.carleton.ca, ASAP and no later than Wednesday, October 6th by 11:59pm EST.

101228361	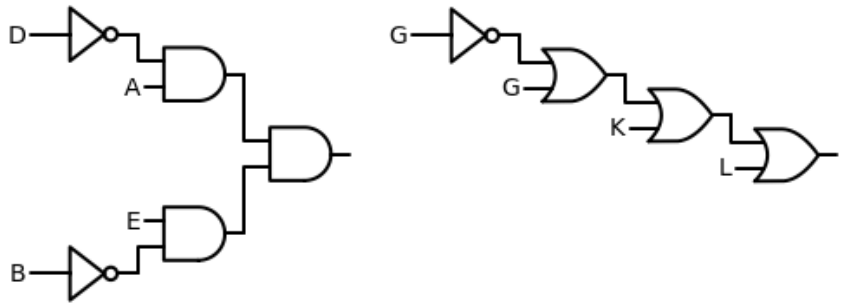
101228435	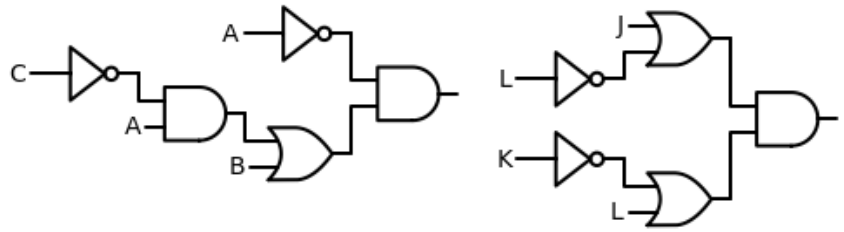
101228442	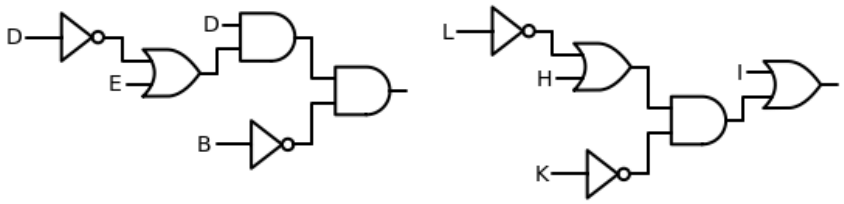
101228602	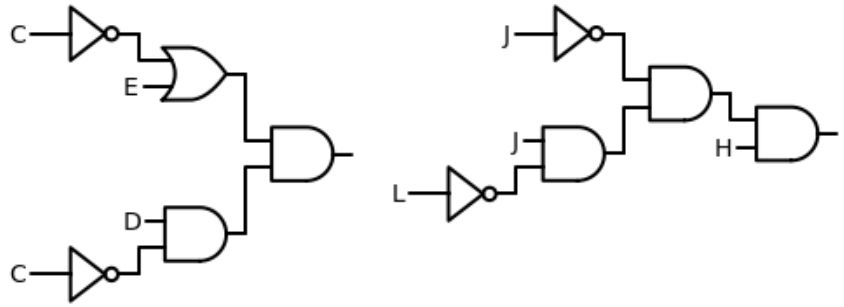
101228809	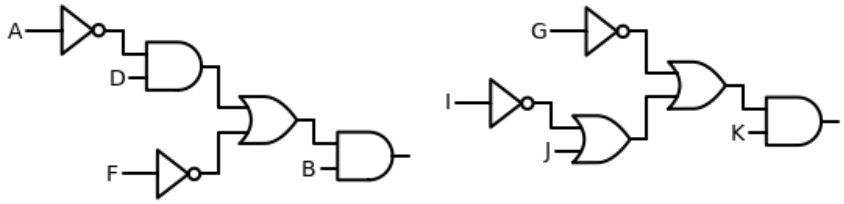

Locate your nine-digit student identification number in the table below and you will see the circuit schematics that have been assigned to you for Assignment 3. If you are unable to locate your student number below, then you must contact your instructor at robert.collier@scs.carleton.ca, ASAP and no later than Wednesday, October 6th by 11:59pm EST.

101228852	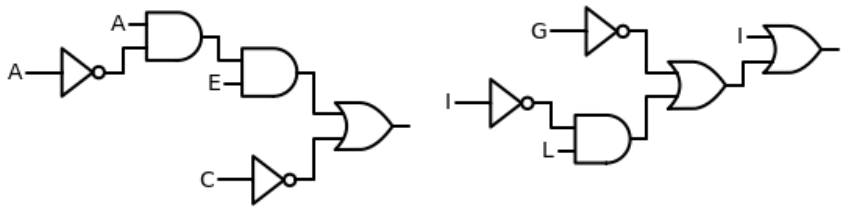
101228906	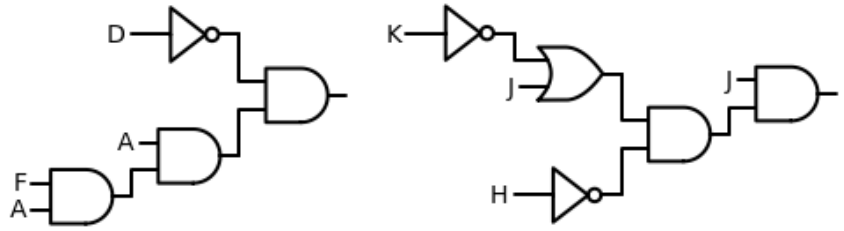
101228934	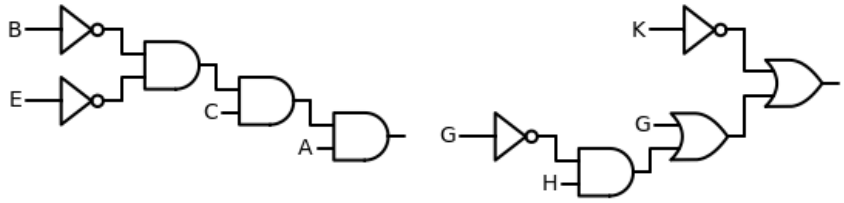
101228966	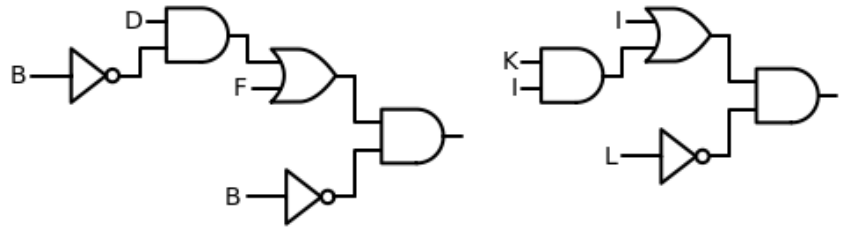
101228969	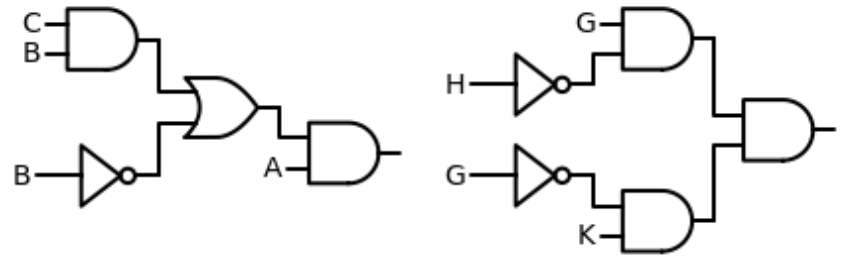

Locate your nine-digit student identification number in the table below and you will see the circuit schematics that have been assigned to you for Assignment 3. If you are unable to locate your student number below, then you must contact your instructor at robert.collier@scs.carleton.ca, ASAP and no later than Wednesday, October 6th by 11:59pm EST.

101228980	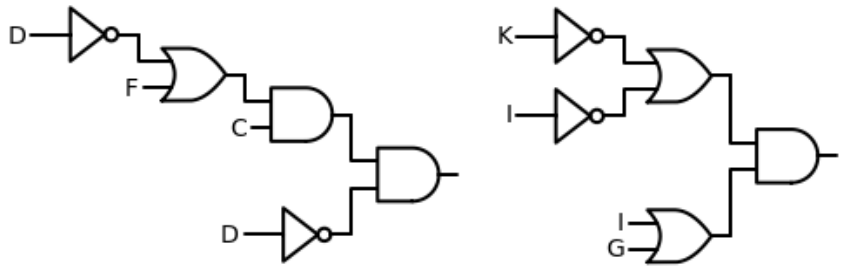
101229084	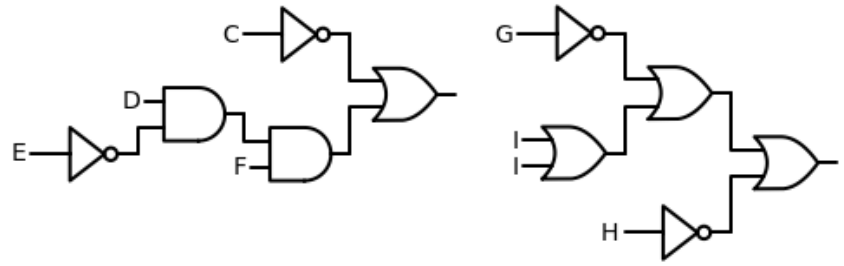
101229120	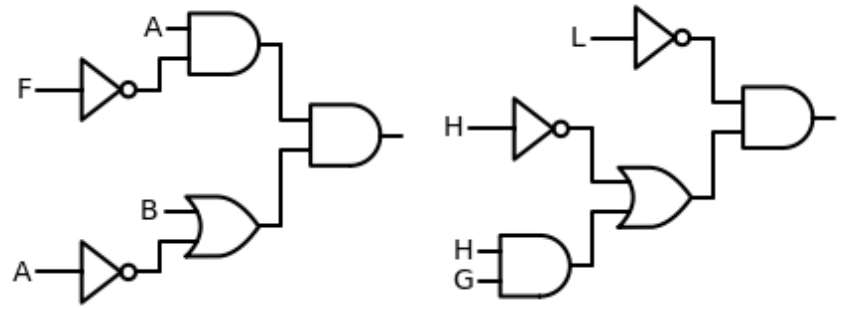
101229165	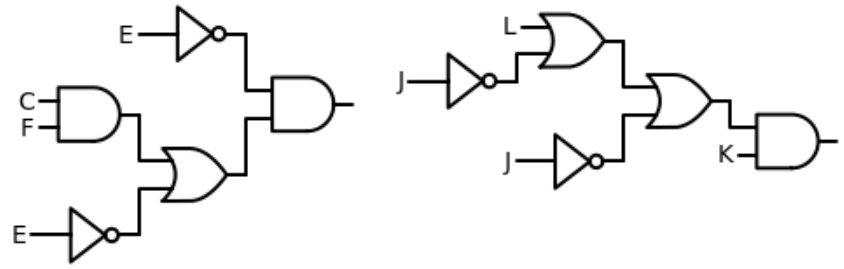

Locate your nine-digit student identification number in the table below and you will see the circuit schematics that have been assigned to you for Assignment 3. If you are unable to locate your student number below, then you must contact your instructor at robert.collier@scs.carleton.ca, ASAP and no later than Wednesday, October 6th by 11:59pm EST.

101229166	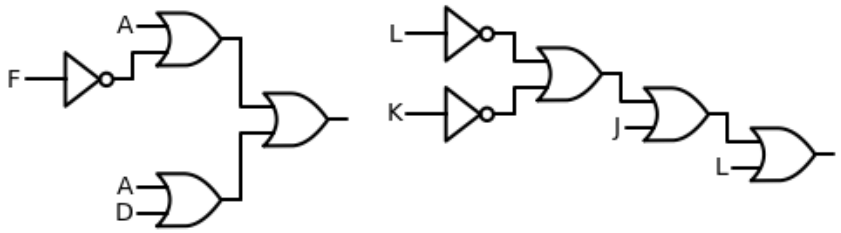
101229216	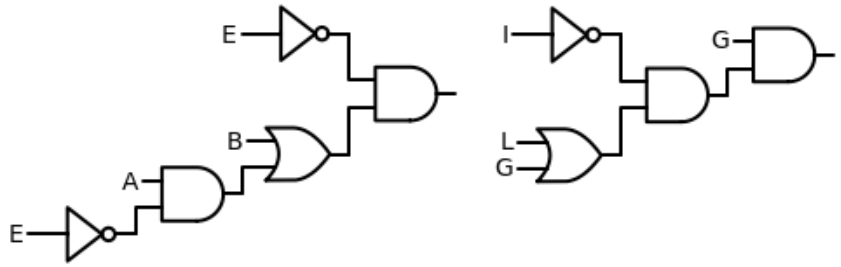
101229241	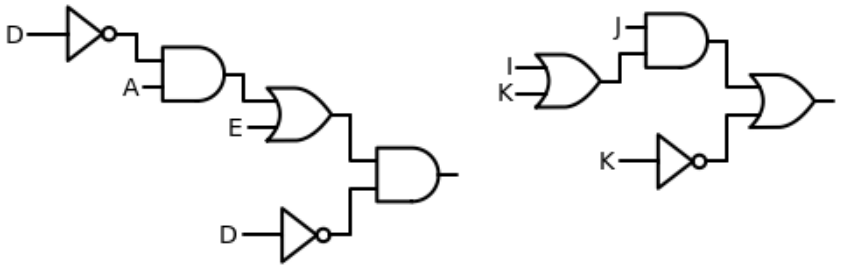
101229245	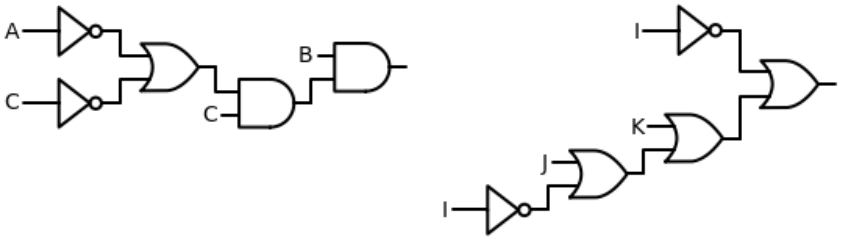

Locate your nine-digit student identification number in the table below and you will see the circuit schematics that have been assigned to you for Assignment 3. If you are unable to locate your student number below, then you must contact your instructor at robert.collier@scs.carleton.ca, ASAP and no later than Wednesday, October 6th by 11:59pm EST.

101229286	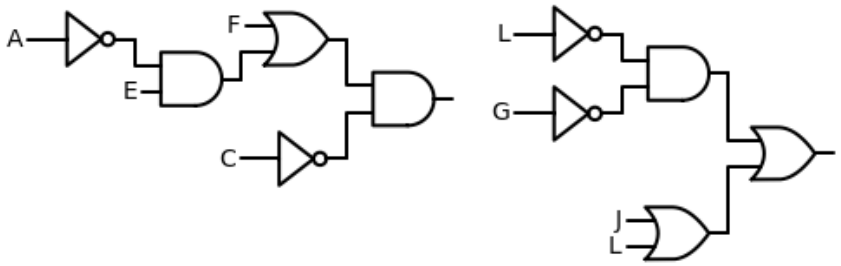
101229342	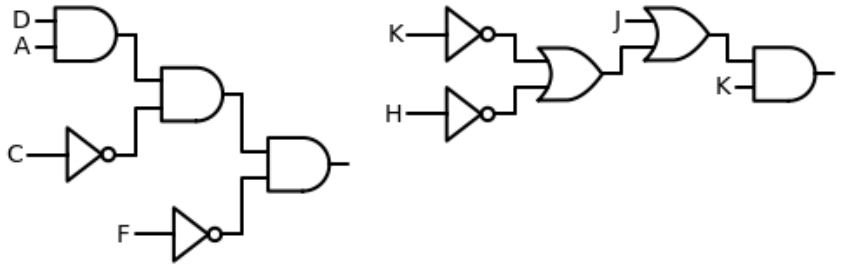
101229440	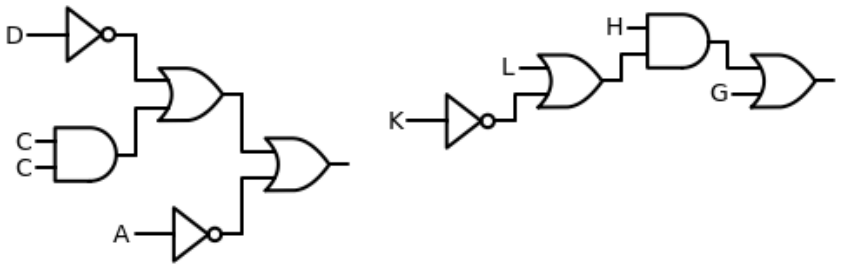
101229469	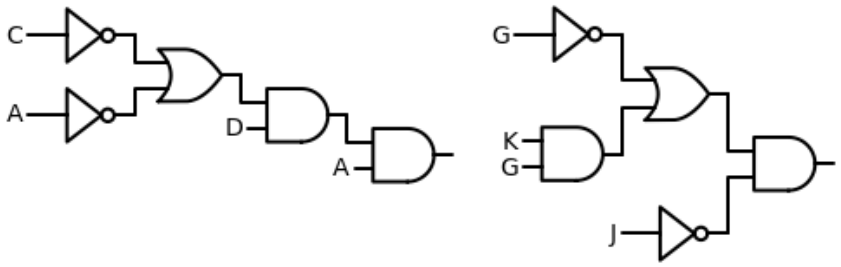

Locate your nine-digit student identification number in the table below and you will see the circuit schematics that have been assigned to you for Assignment 3. If you are unable to locate your student number below, then you must contact your instructor at robert.collier@scs.carleton.ca, ASAP and no later than Wednesday, October 6th by 11:59pm EST.

101229499	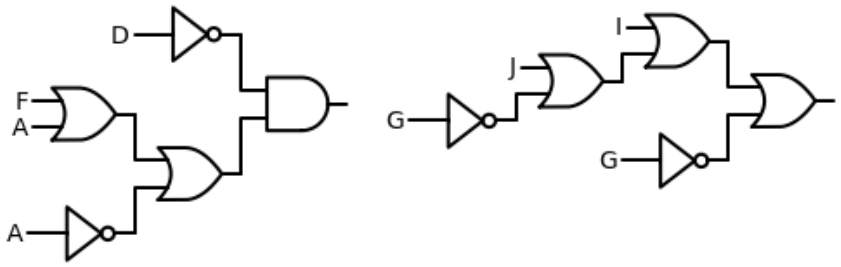
101229510	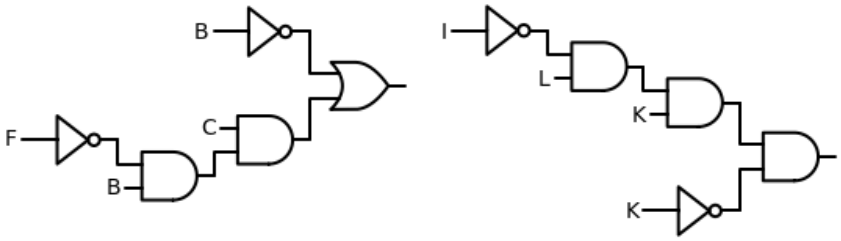
101229564	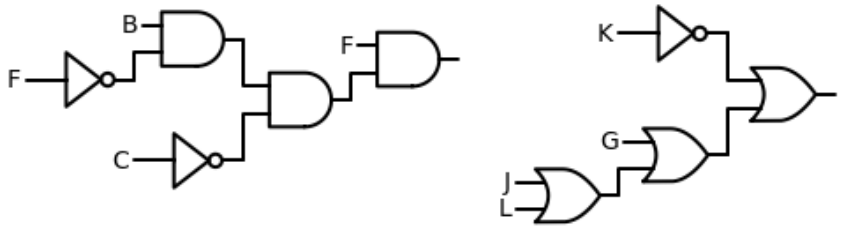
101229796	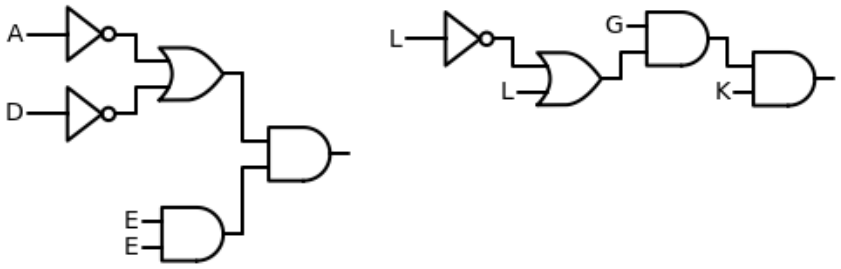
101229815	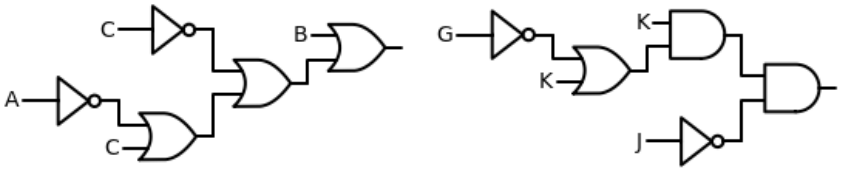

Locate your nine-digit student identification number in the table below and you will see the circuit schematics that have been assigned to you for Assignment 3. If you are unable to locate your student number below, then you must contact your instructor at robert.collier@scs.carleton.ca, ASAP and no later than Wednesday, October 6th by 11:59pm EST.

101229829	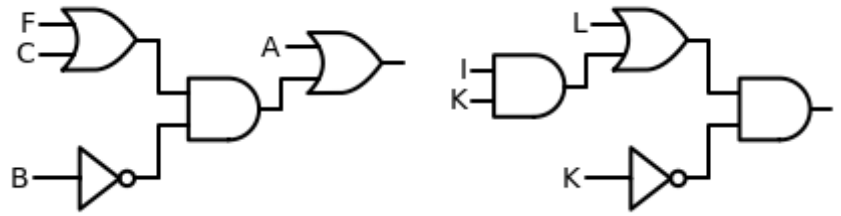
101229838	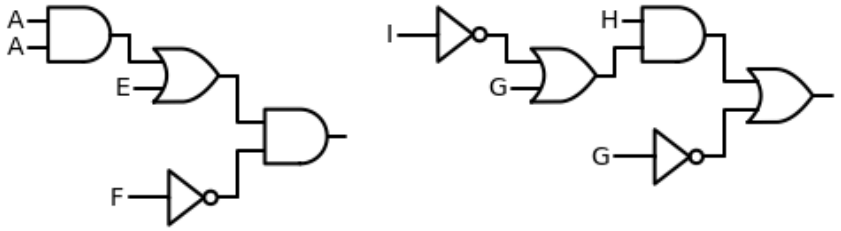
101229882	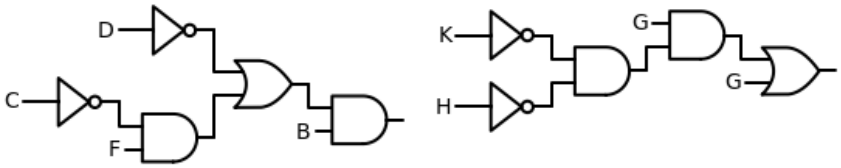
101229920	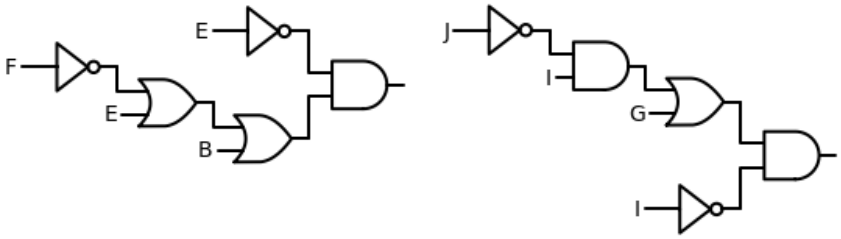
101229934	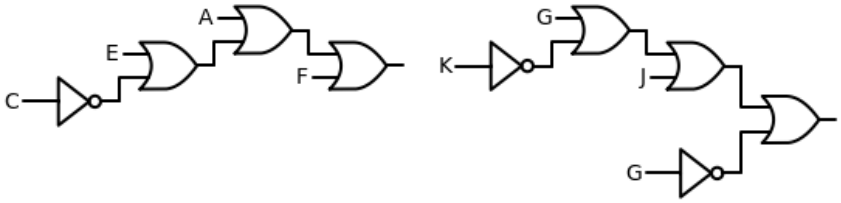

Locate your nine-digit student identification number in the table below and you will see the circuit schematics that have been assigned to you for Assignment 3. If you are unable to locate your student number below, then you must contact your instructor at robert.collier@scs.carleton.ca, ASAP and no later than Wednesday, October 6th by 11:59pm EST.

101229946	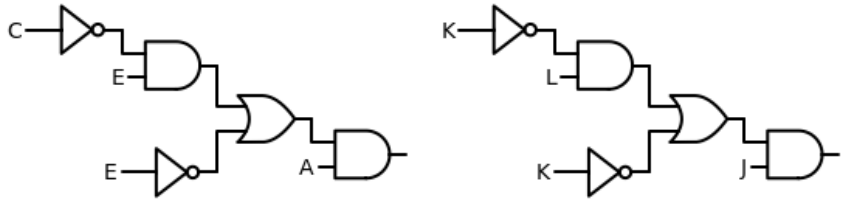
101230086	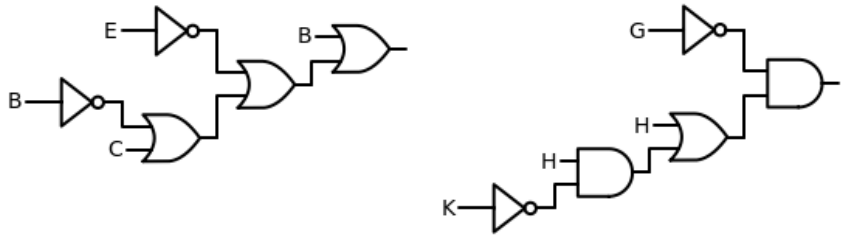
101230141	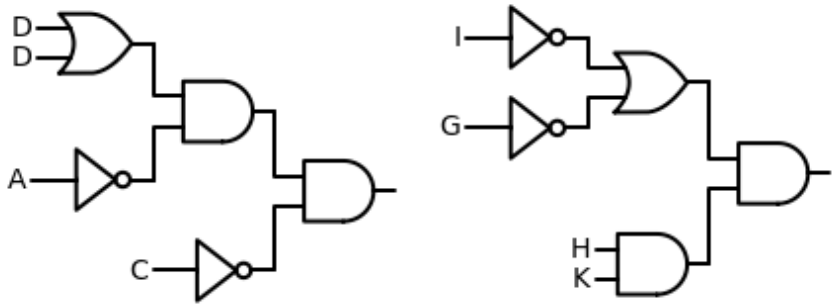
101230226	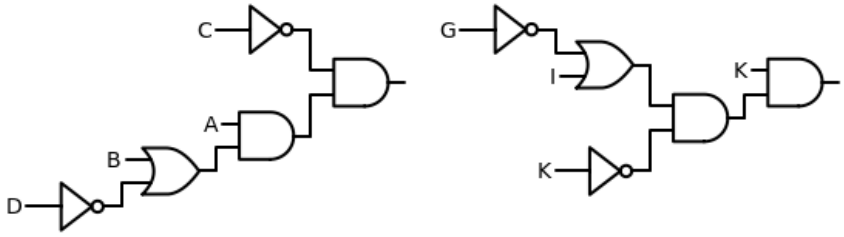

Locate your nine-digit student identification number in the table below and you will see the circuit schematics that have been assigned to you for Assignment 3. If you are unable to locate your student number below, then you must contact your instructor at robert.collier@scs.carleton.ca, ASAP and no later than Wednesday, October 6th by 11:59pm EST.

101230498	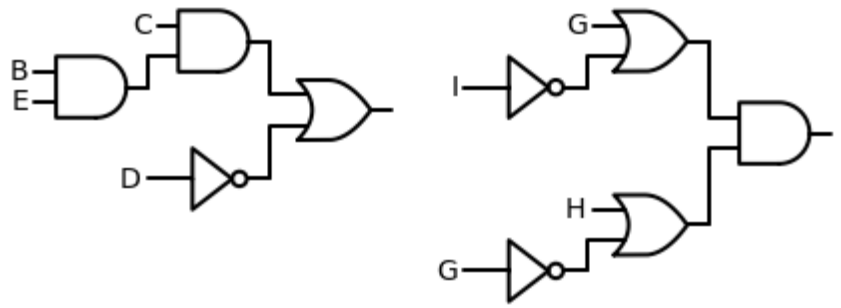
101230527	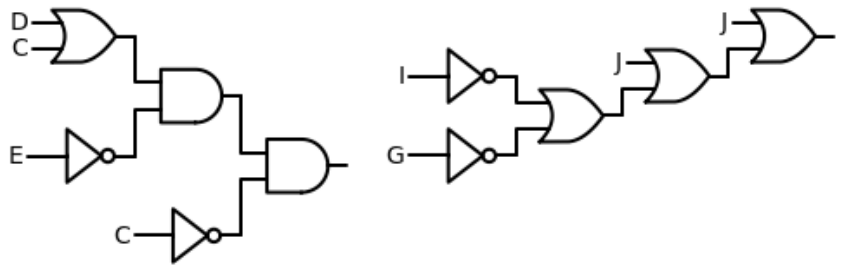
101230557	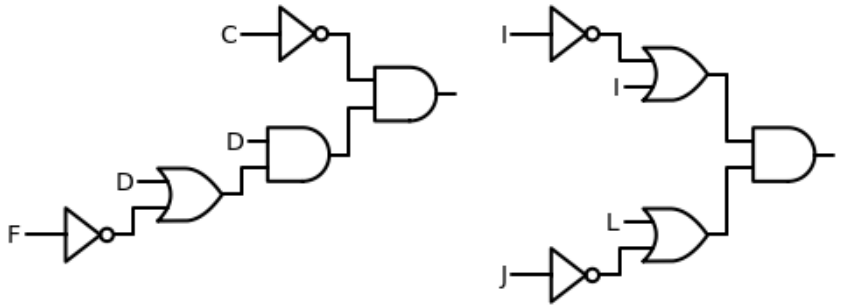
101230620	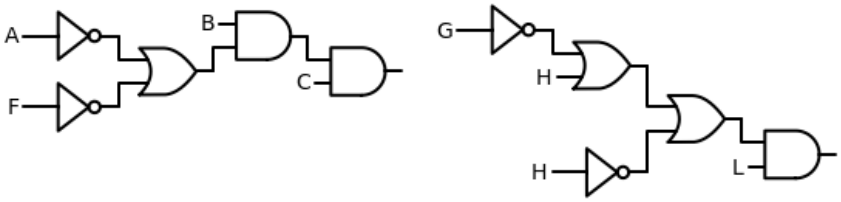

Locate your nine-digit student identification number in the table below and you will see the circuit schematics that have been assigned to you for Assignment 3. If you are unable to locate your student number below, then you must contact your instructor at robert.collier@scs.carleton.ca, ASAP and no later than Wednesday, October 6th by 11:59pm EST.

101230623	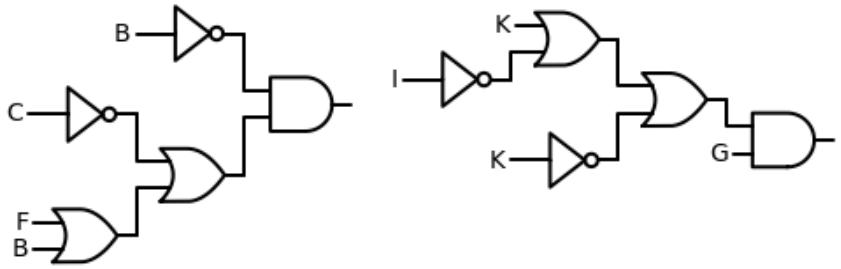
101230812	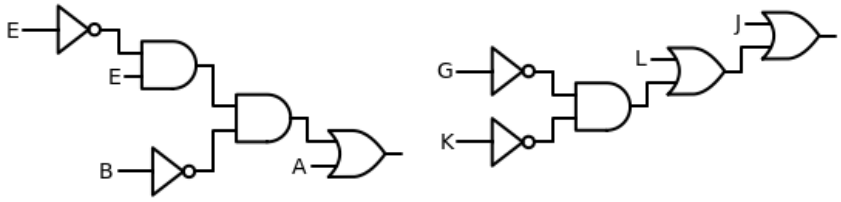
101230873	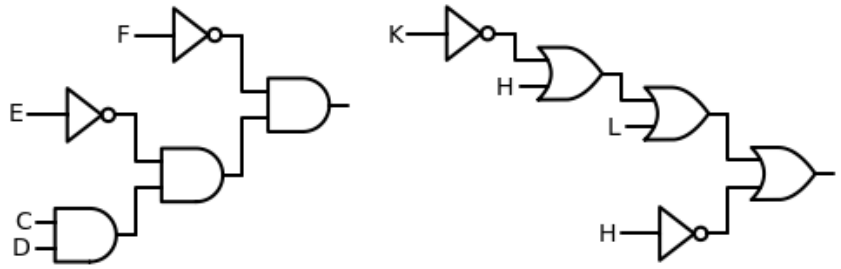
101230882	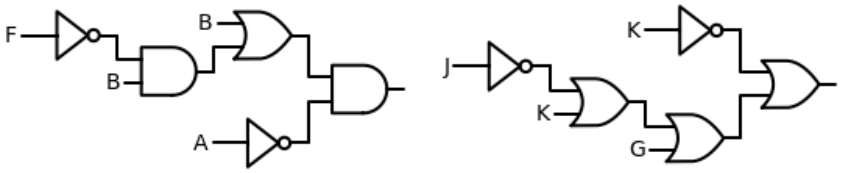
101230999	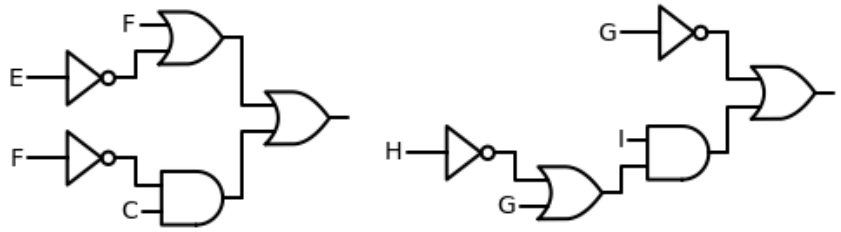

Locate your nine-digit student identification number in the table below and you will see the circuit schematics that have been assigned to you for Assignment 3. If you are unable to locate your student number below, then you must contact your instructor at robert.collier@scs.carleton.ca, ASAP and no later than Wednesday, October 6th by 11:59pm EST.

101231025	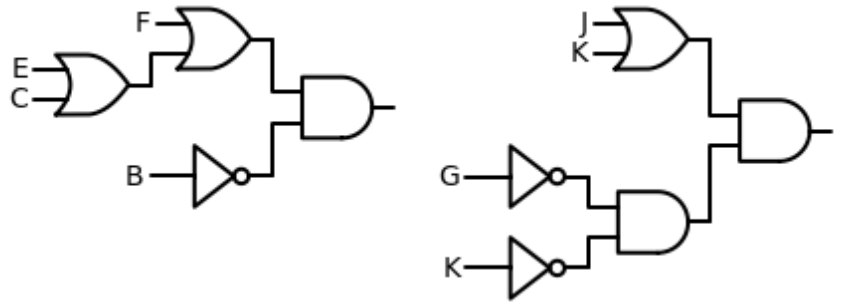
101231040	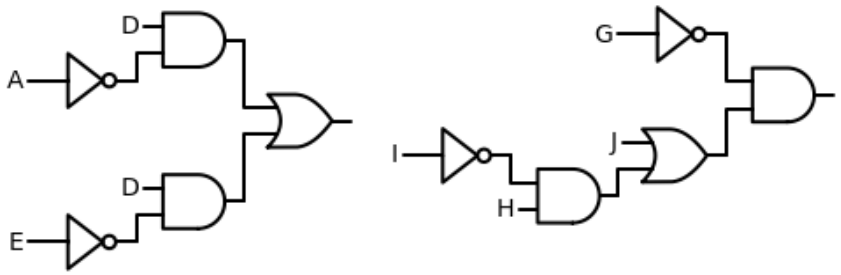
101231064	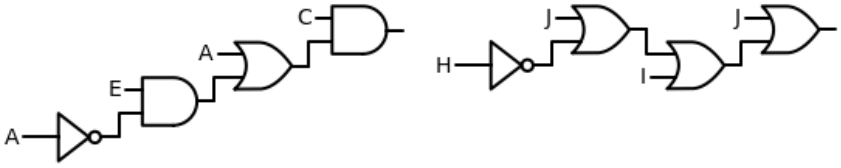
101231096	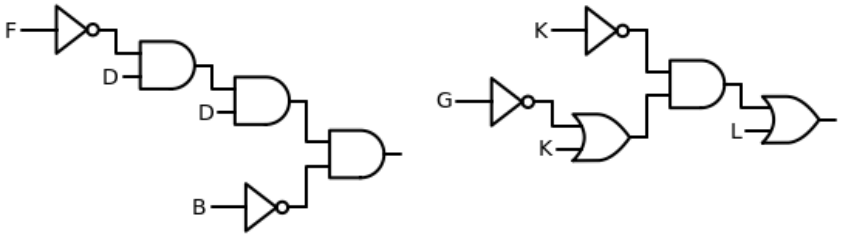

Locate your nine-digit student identification number in the table below and you will see the circuit schematics that have been assigned to you for Assignment 3. If you are unable to locate your student number below, then you must contact your instructor at robert.collier@scs.carleton.ca, ASAP and no later than Wednesday, October 6th by 11:59pm EST.

101231100	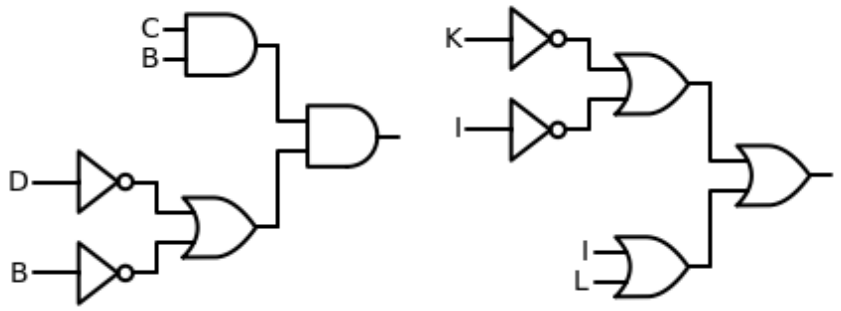
101231209	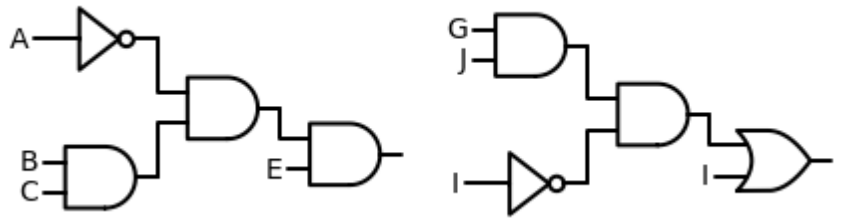
101231212	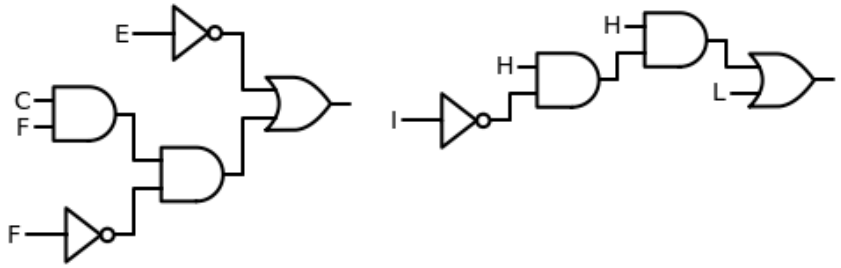
101231225	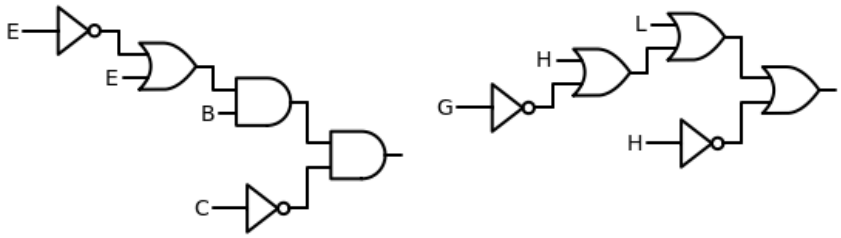

Locate your nine-digit student identification number in the table below and you will see the circuit schematics that have been assigned to you for Assignment 3. If you are unable to locate your student number below, then you must contact your instructor at robert.collier@scs.carleton.ca, ASAP and no later than Wednesday, October 6th by 11:59pm EST.

101231265	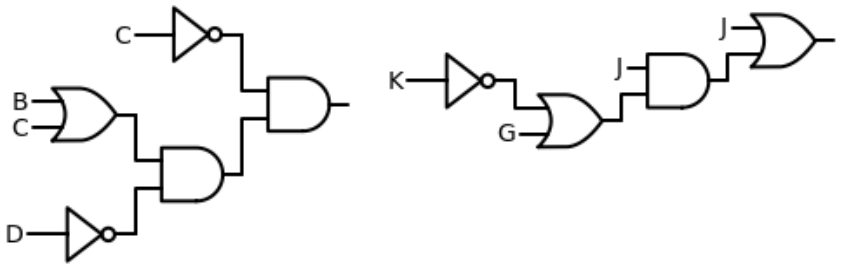
101231285	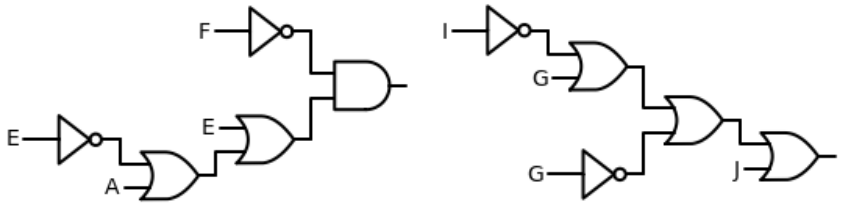
101231382	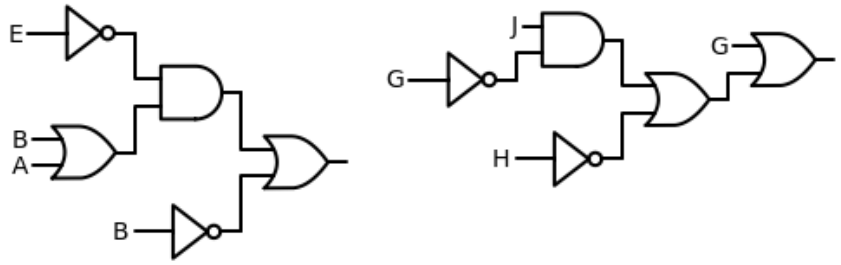
101231388	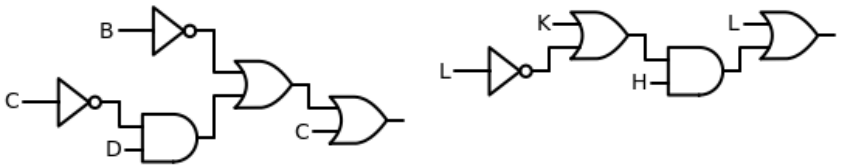
101231537	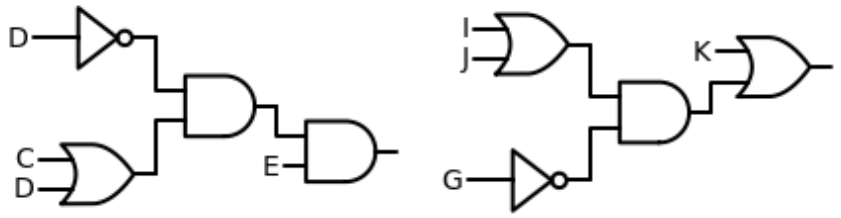

Locate your nine-digit student identification number in the table below and you will see the circuit schematics that have been assigned to you for Assignment 3. If you are unable to locate your student number below, then you must contact your instructor at robert.collier@scs.carleton.ca, ASAP and no later than Wednesday, October 6th by 11:59pm EST.

101231566	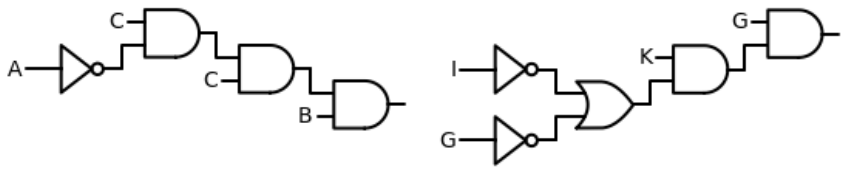
101231623	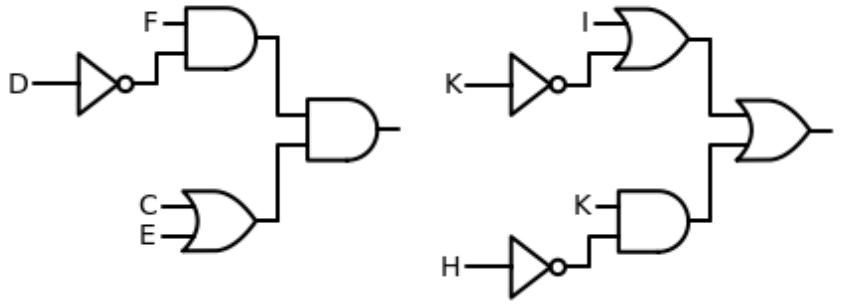
101231679	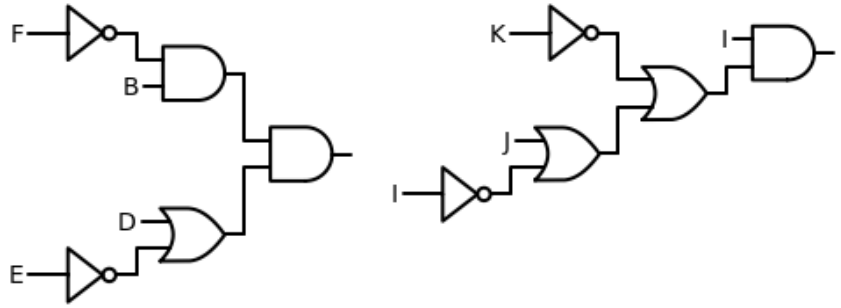
101231683	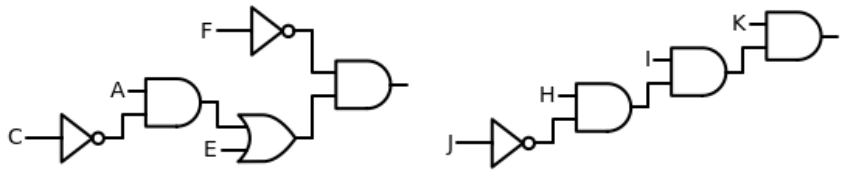
101231686	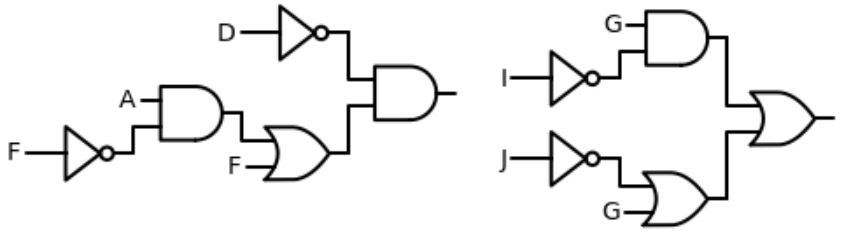

Locate your nine-digit student identification number in the table below and you will see the circuit schematics that have been assigned to you for Assignment 3. If you are unable to locate your student number below, then you must contact your instructor at robert.collier@scs.carleton.ca, ASAP and no later than Wednesday, October 6th by 11:59pm EST.

101231751	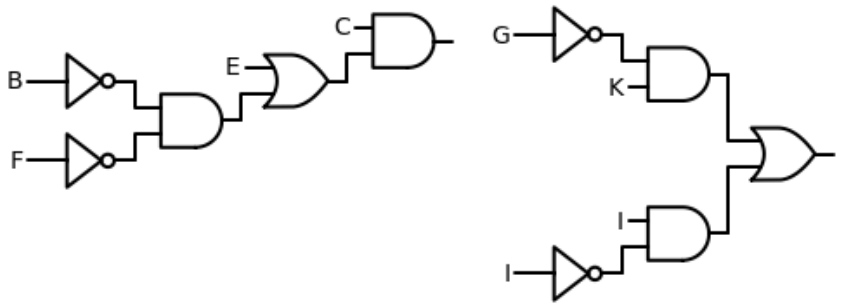
101231794	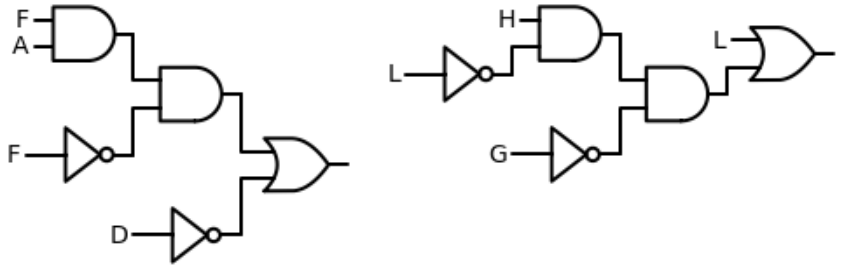
101231795	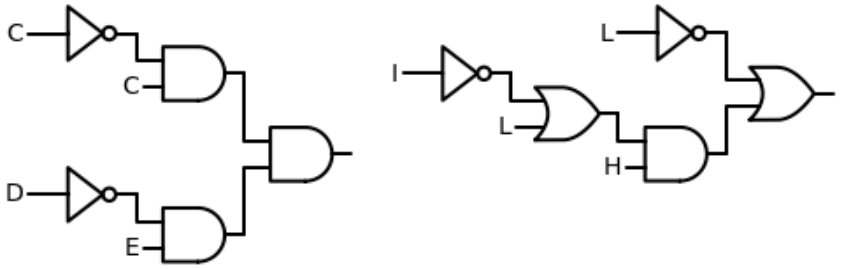
101231899	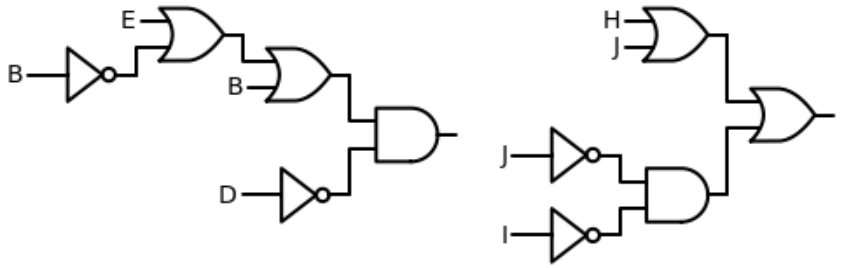

Locate your nine-digit student identification number in the table below and you will see the circuit schematics that have been assigned to you for Assignment 3. If you are unable to locate your student number below, then you must contact your instructor at robert.collier@scs.carleton.ca, ASAP and no later than Wednesday, October 6th by 11:59pm EST.

101231922	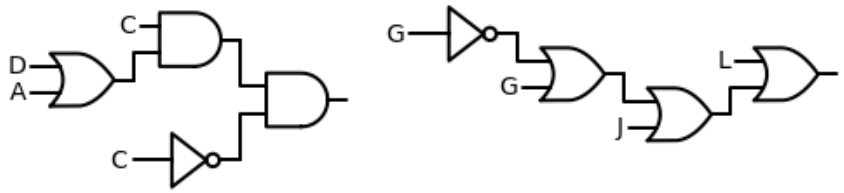
101231954	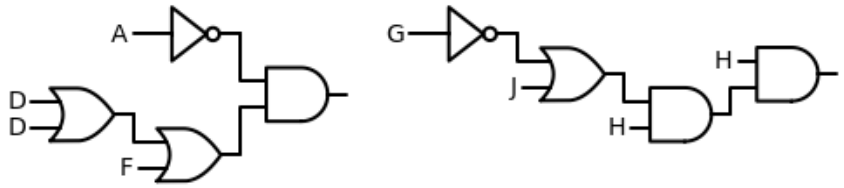
101231956	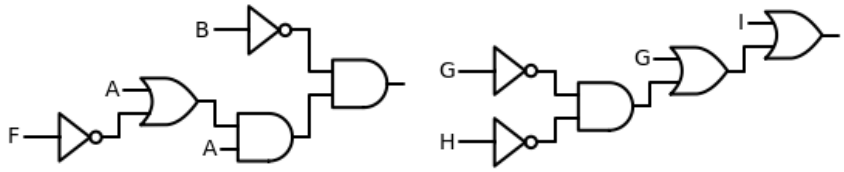
101232038	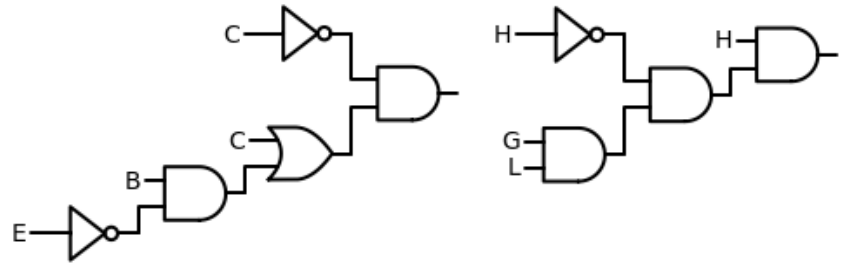
101232041	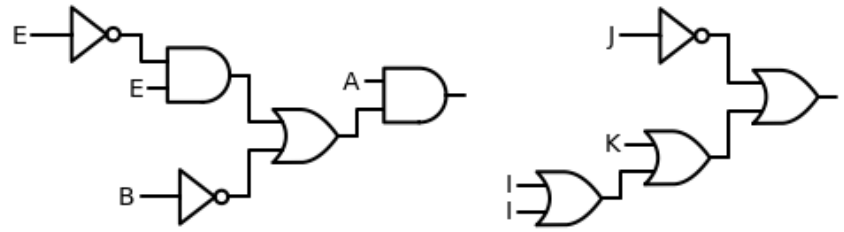

Locate your nine-digit student identification number in the table below and you will see the circuit schematics that have been assigned to you for Assignment 3. If you are unable to locate your student number below, then you must contact your instructor at robert.collier@scs.carleton.ca, ASAP and no later than Wednesday, October 6th by 11:59pm EST.

101232075	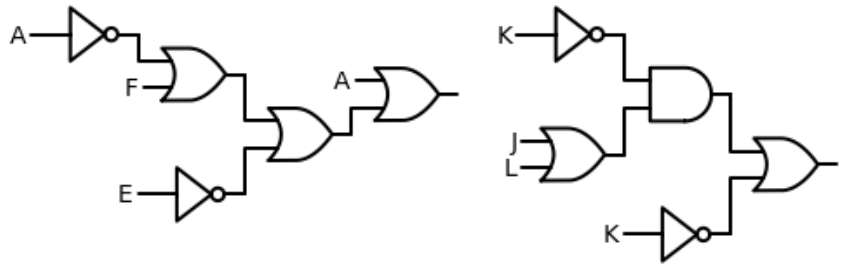
101232094	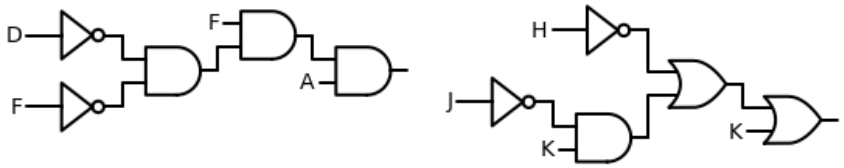
101232113	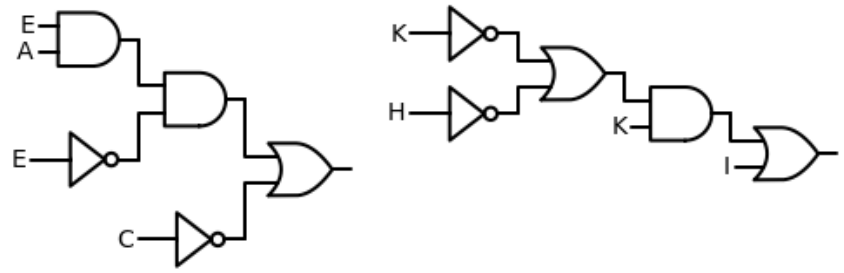
101232370	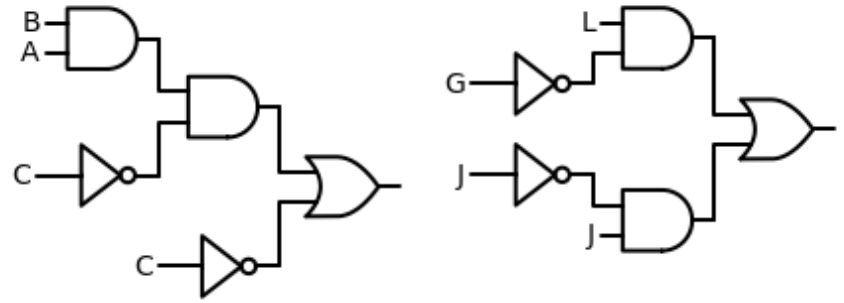

Locate your nine-digit student identification number in the table below and you will see the circuit schematics that have been assigned to you for Assignment 3. If you are unable to locate your student number below, then you must contact your instructor at robert.collier@scs.carleton.ca, ASAP and no later than Wednesday, October 6th by 11:59pm EST.

101232374	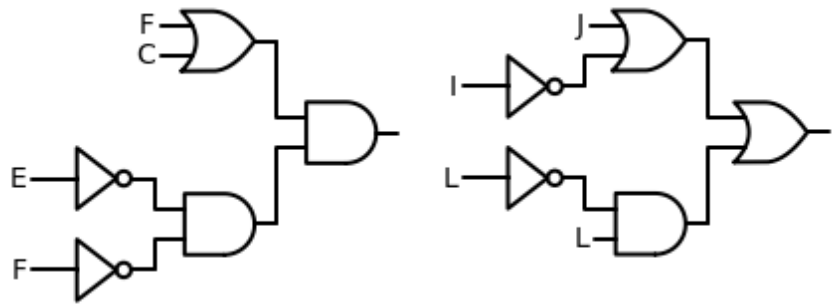
101232439	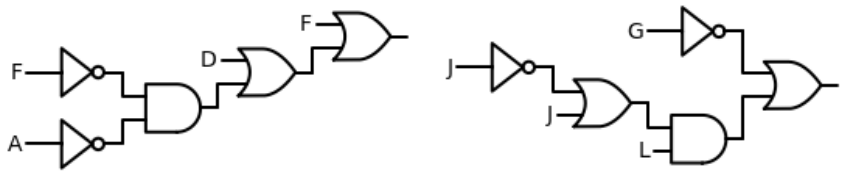
101232452	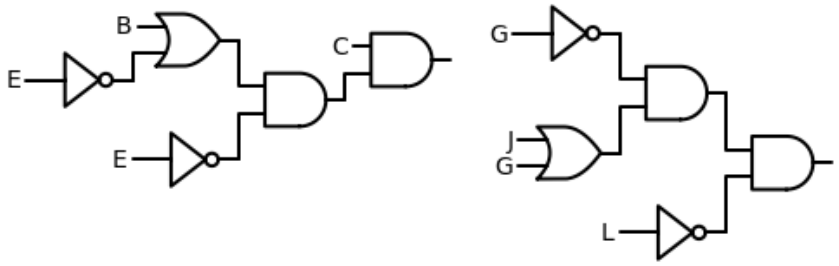
101232464	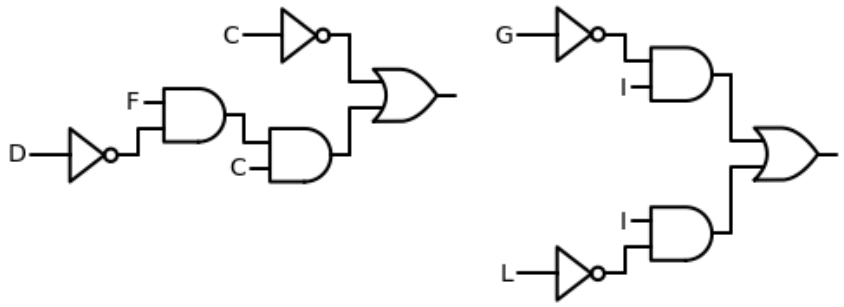
101232770	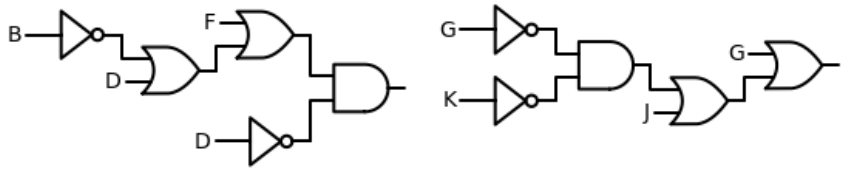

Locate your nine-digit student identification number in the table below and you will see the circuit schematics that have been assigned to you for Assignment 3. If you are unable to locate your student number below, then you must contact your instructor at robert.collier@scs.carleton.ca, ASAP and no later than Wednesday, October 6th by 11:59pm EST.

101232771	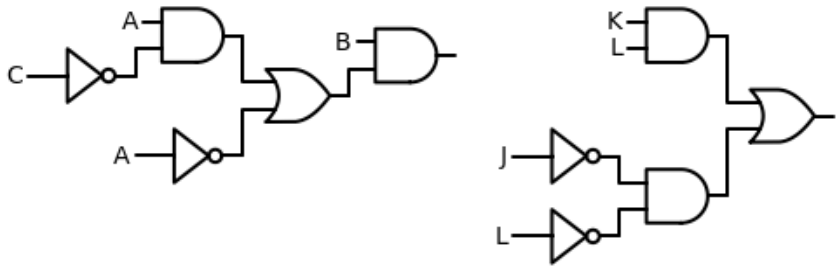
101232804	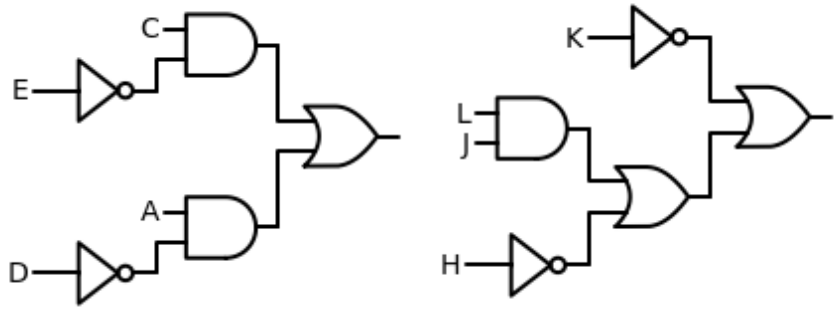
101232811	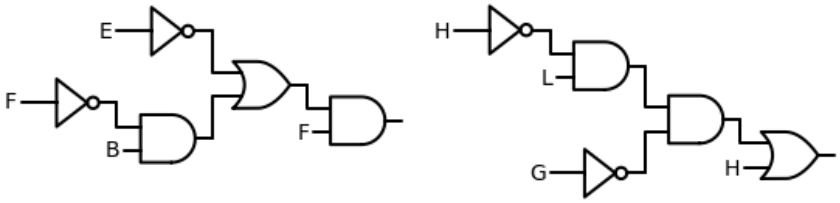
101232831	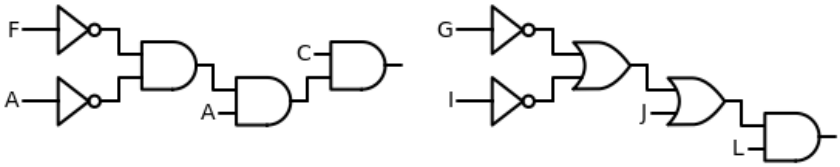
101232948	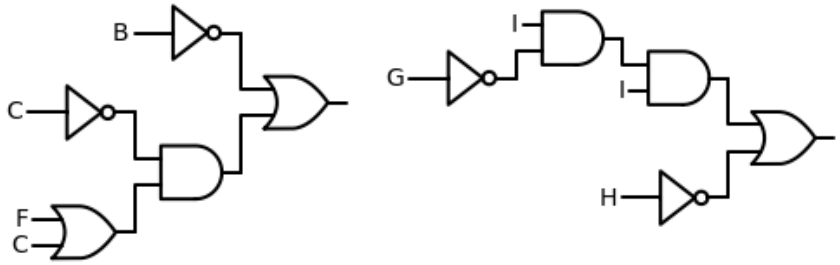

Locate your nine-digit student identification number in the table below and you will see the circuit schematics that have been assigned to you for Assignment 3. If you are unable to locate your student number below, then you must contact your instructor at robert.collier@scs.carleton.ca, ASAP and no later than Wednesday, October 6th by 11:59pm EST.

101232972	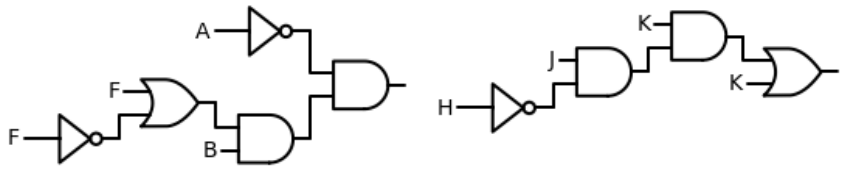
101232993	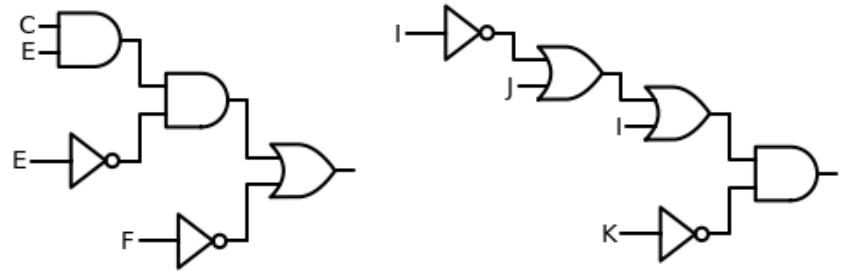
101233029	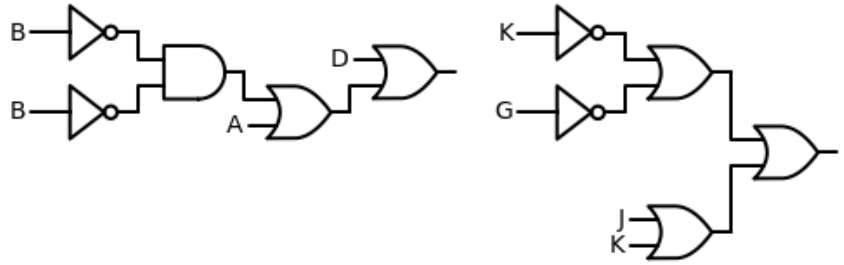
101233045	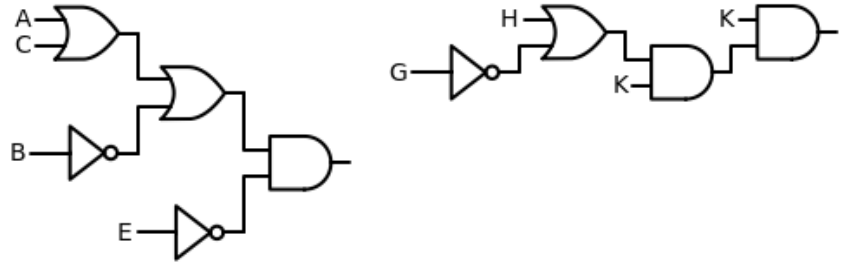
101233047	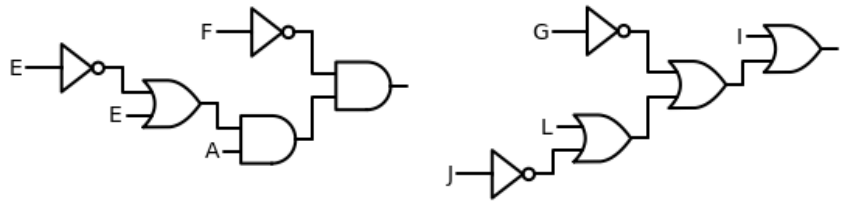

Locate your nine-digit student identification number in the table below and you will see the circuit schematics that have been assigned to you for Assignment 3. If you are unable to locate your student number below, then you must contact your instructor at robert.collier@scs.carleton.ca, ASAP and no later than Wednesday, October 6th by 11:59pm EST.

101233057	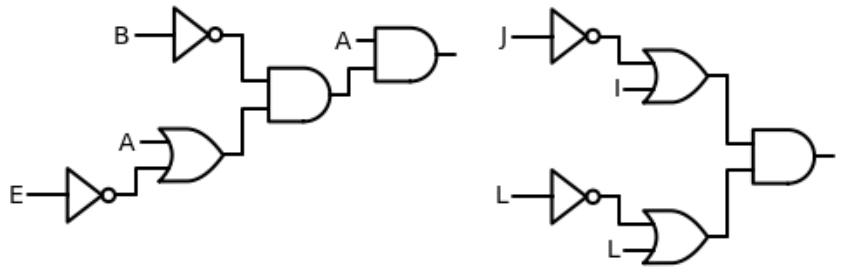
101233254	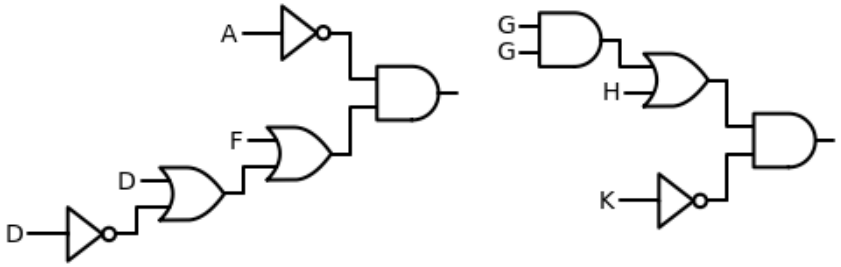
101233267	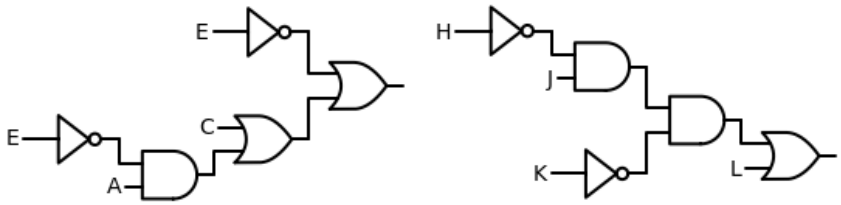
101233284	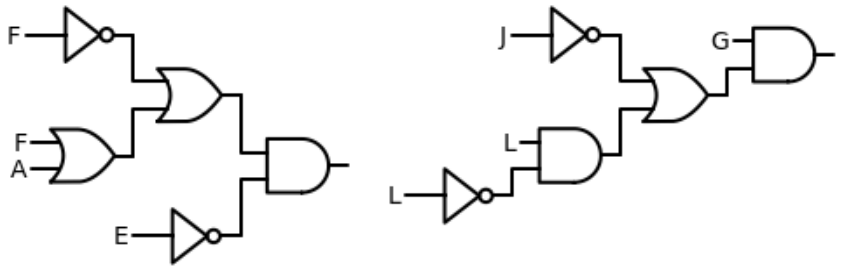

Locate your nine-digit student identification number in the table below and you will see the circuit schematics that have been assigned to you for Assignment 3. If you are unable to locate your student number below, then you must contact your instructor at robert.collier@scs.carleton.ca, ASAP and no later than Wednesday, October 6th by 11:59pm EST.

101233289	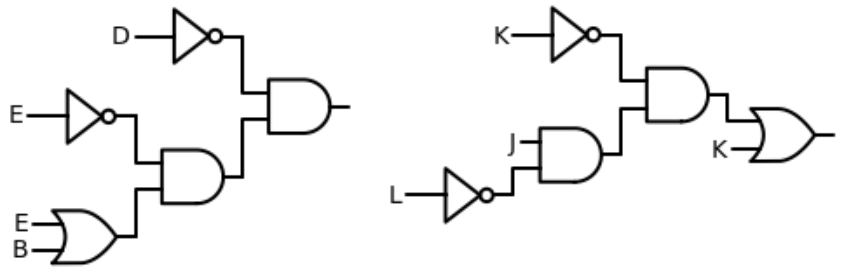
101233368	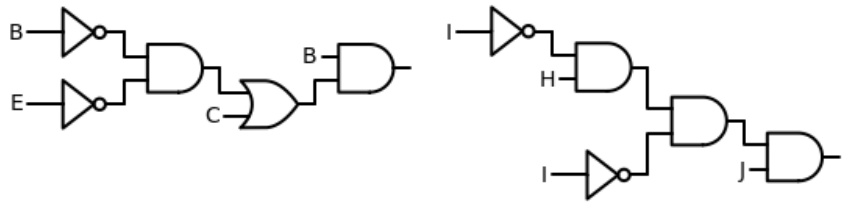
101233480	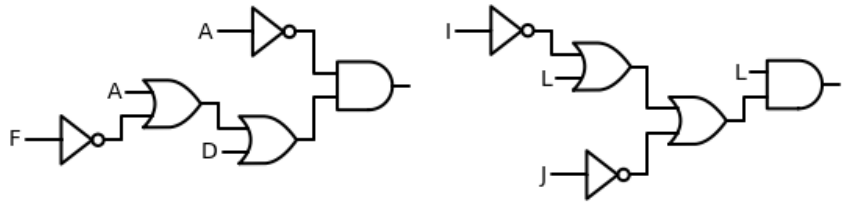
101233496	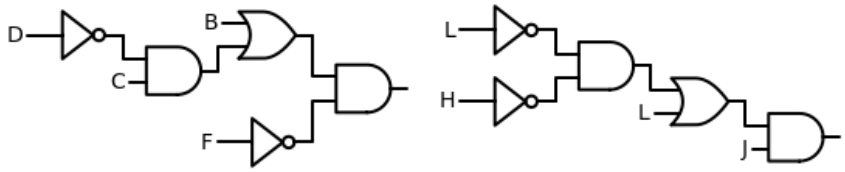
101233520	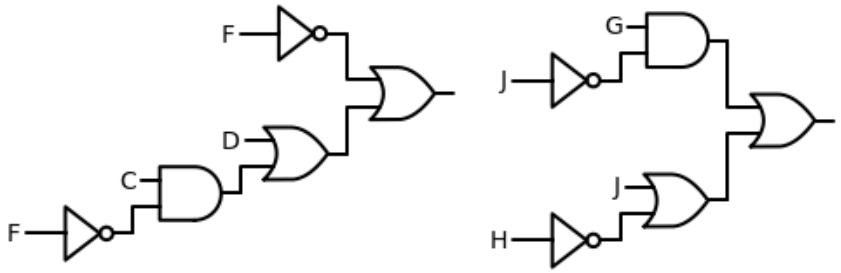

Locate your nine-digit student identification number in the table below and you will see the circuit schematics that have been assigned to you for Assignment 3. If you are unable to locate your student number below, then you must contact your instructor at robert.collier@scs.carleton.ca, ASAP and no later than Wednesday, October 6th by 11:59pm EST.

101233571	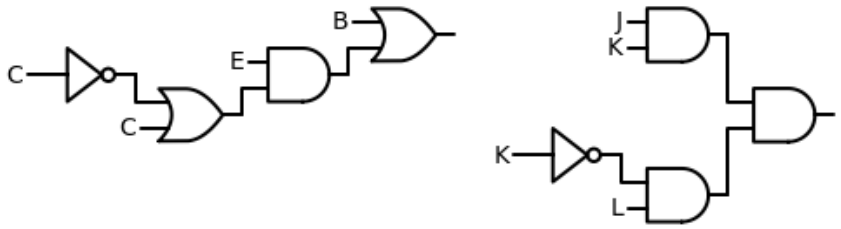
101233618	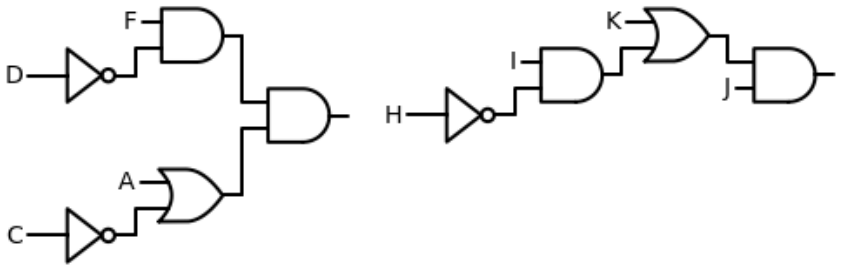
101233621	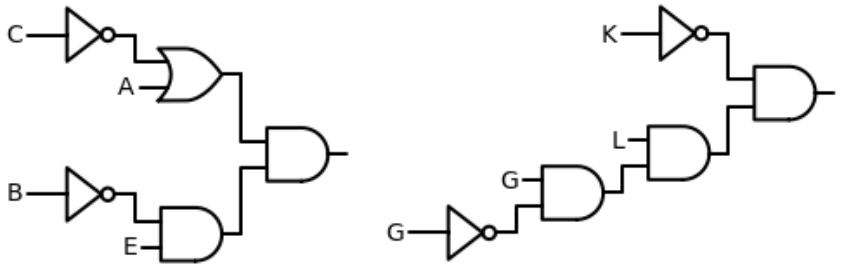
101233641	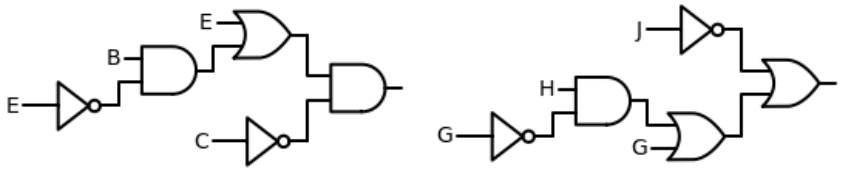
101233772	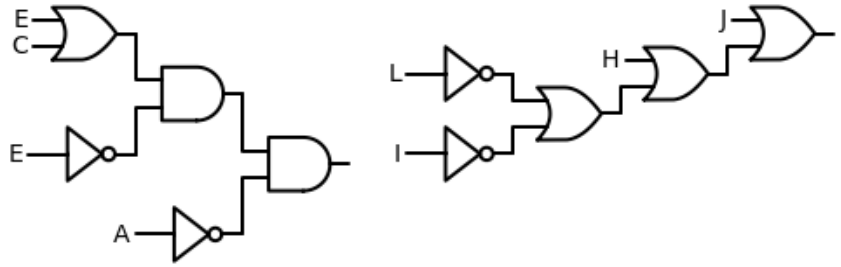

Locate your nine-digit student identification number in the table below and you will see the circuit schematics that have been assigned to you for Assignment 3. If you are unable to locate your student number below, then you must contact your instructor at robert.collier@scs.carleton.ca, ASAP and no later than Wednesday, October 6th by 11:59pm EST.

101233786	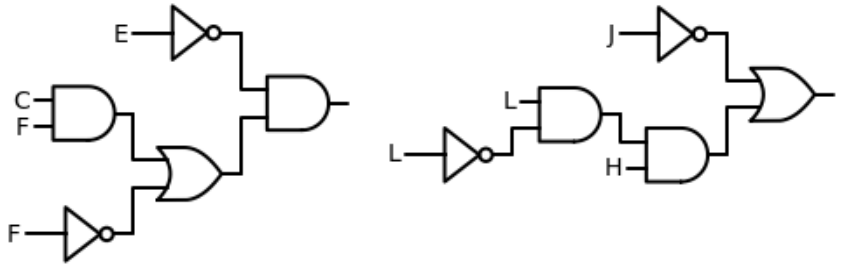
101233844	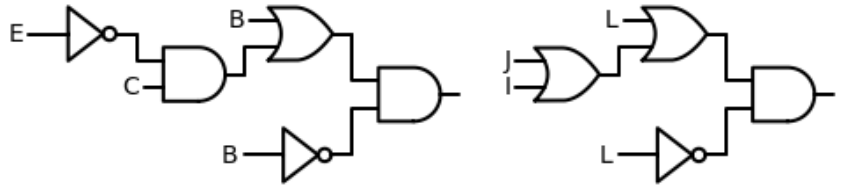
101233848	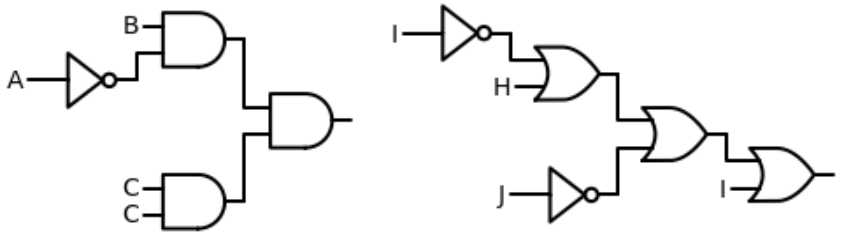
101233884	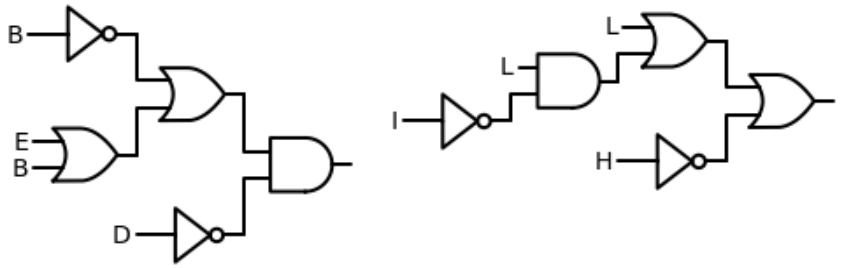
101233896	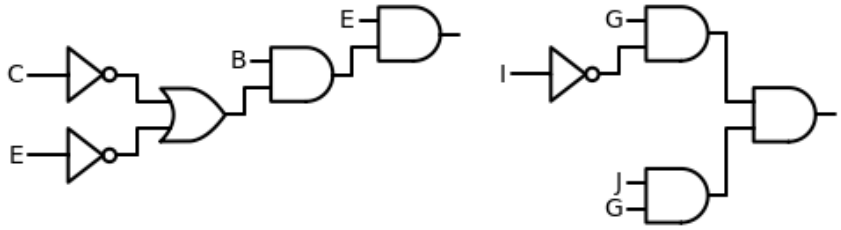

Locate your nine-digit student identification number in the table below and you will see the circuit schematics that have been assigned to you for Assignment 3. If you are unable to locate your student number below, then you must contact your instructor at robert.collier@scs.carleton.ca, ASAP and no later than Wednesday, October 6th by 11:59pm EST.

101233923	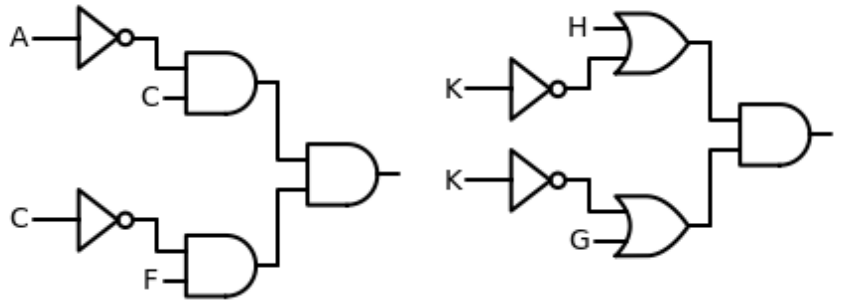
101233929	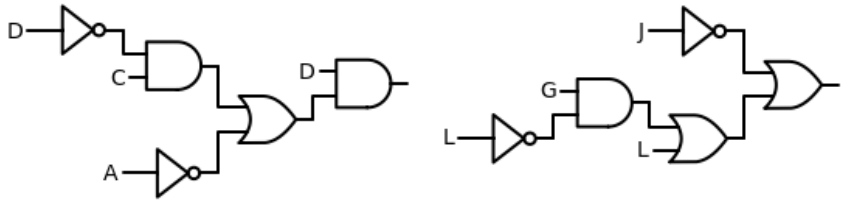
101234046	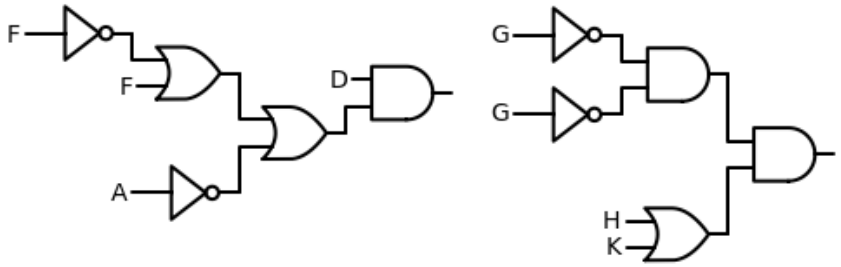
101234446	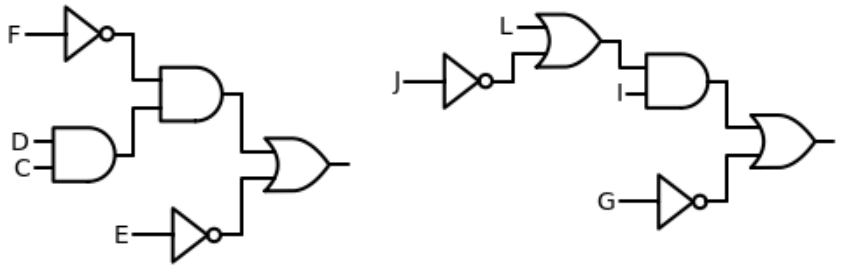

Locate your nine-digit student identification number in the table below and you will see the circuit schematics that have been assigned to you for Assignment 3. If you are unable to locate your student number below, then you must contact your instructor at robert.collier@scs.carleton.ca, ASAP and no later than Wednesday, October 6th by 11:59pm EST.

101234579	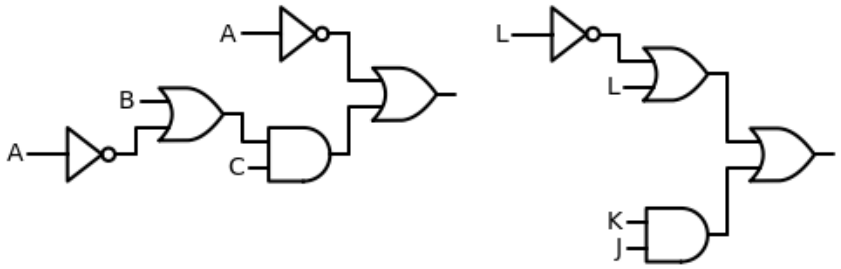
101234626	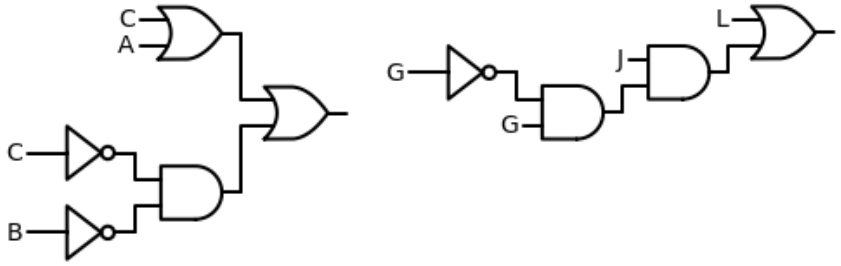
101234656	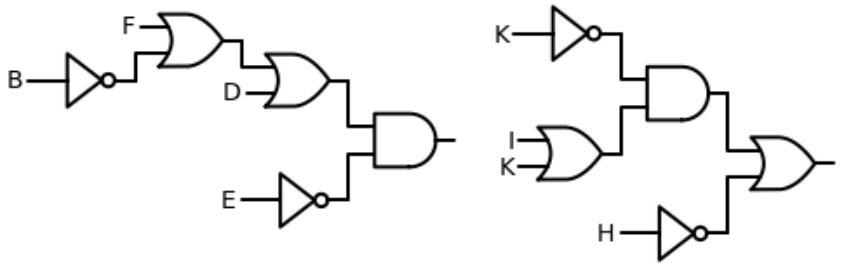
101234706	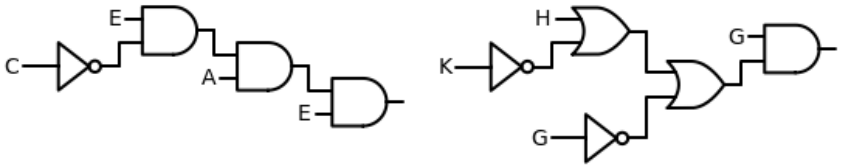
101234775	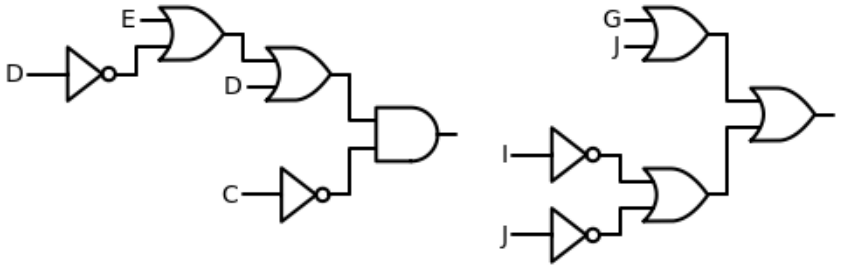

Locate your nine-digit student identification number in the table below and you will see the circuit schematics that have been assigned to you for Assignment 3. If you are unable to locate your student number below, then you must contact your instructor at robert.collier@scs.carleton.ca, ASAP and no later than Wednesday, October 6th by 11:59pm EST.

101234792	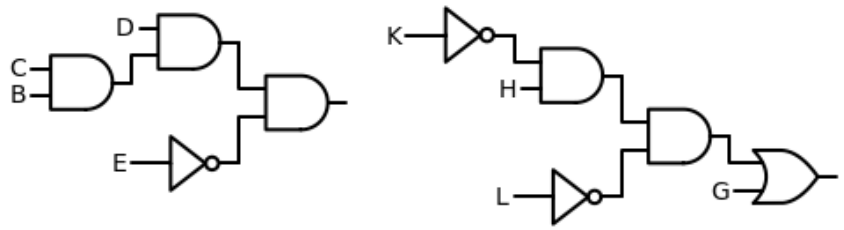
101234823	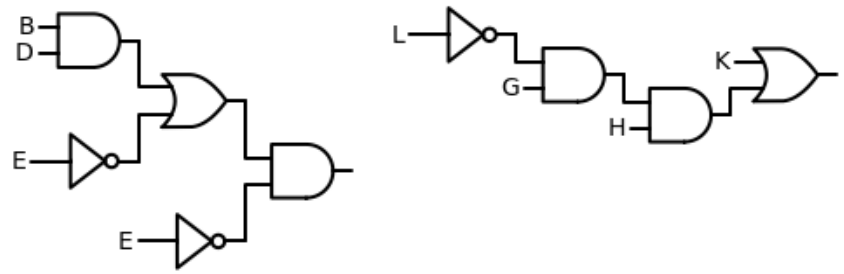
101234888	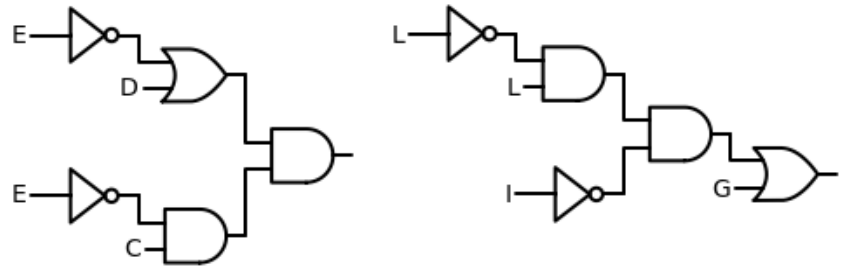
101234893	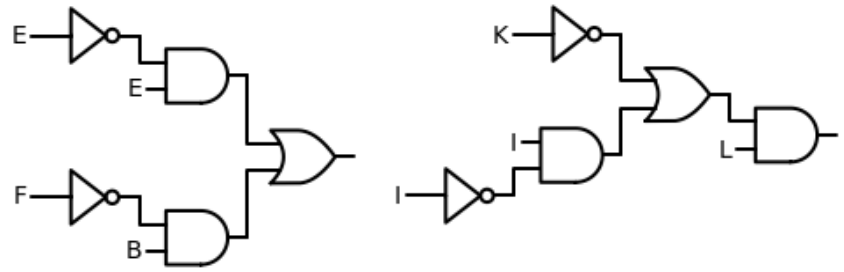
101234914	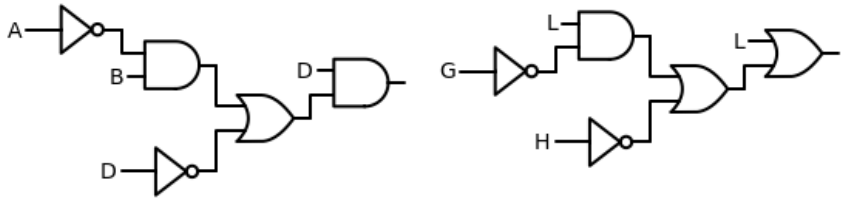

Locate your nine-digit student identification number in the table below and you will see the circuit schematics that have been assigned to you for Assignment 3. If you are unable to locate your student number below, then you must contact your instructor at robert.collier@scs.carleton.ca, ASAP and no later than Wednesday, October 6th by 11:59pm EST.

101234938	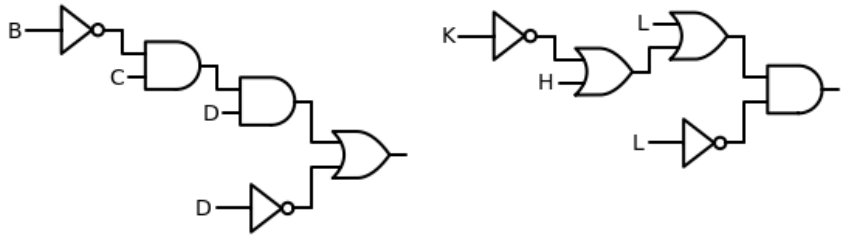
101234979	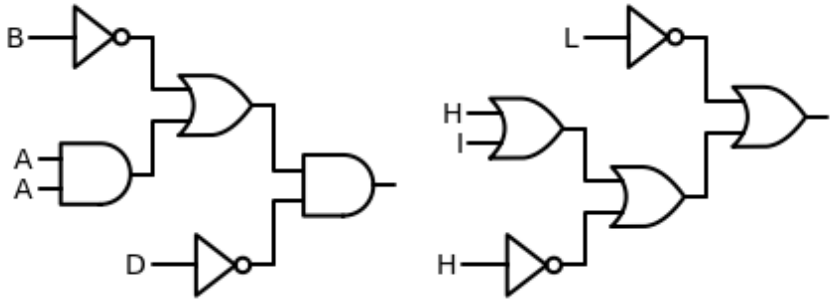
101235041	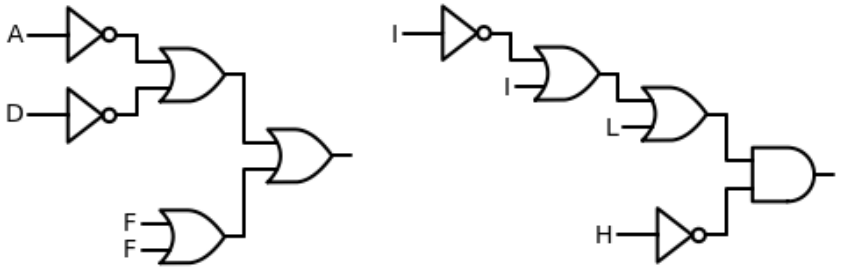
101235140	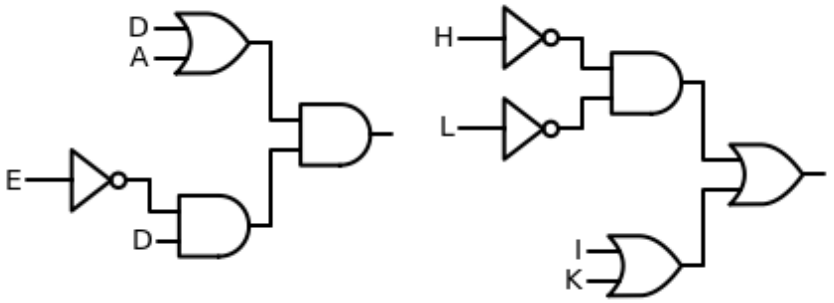

Locate your nine-digit student identification number in the table below and you will see the circuit schematics that have been assigned to you for Assignment 3. If you are unable to locate your student number below, then you must contact your instructor at robert.collier@scs.carleton.ca, ASAP and no later than Wednesday, October 6th by 11:59pm EST.

101235142	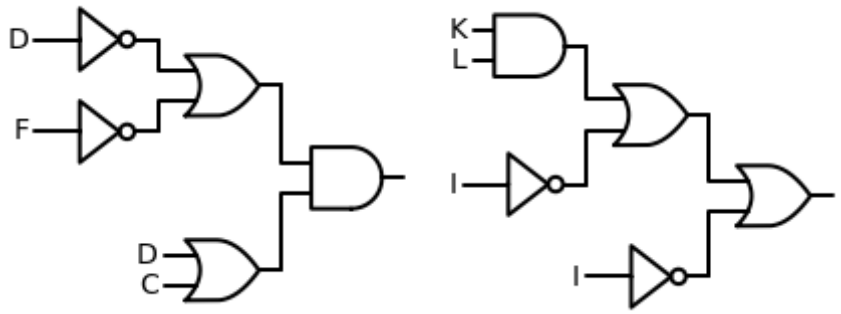
101235170	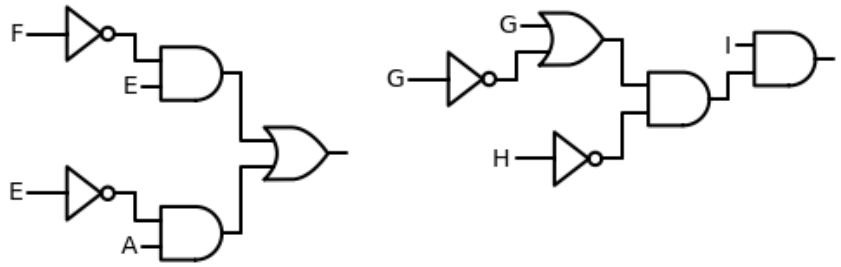
101235386	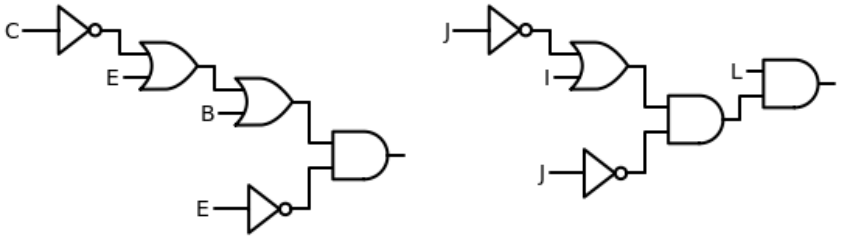
101235402	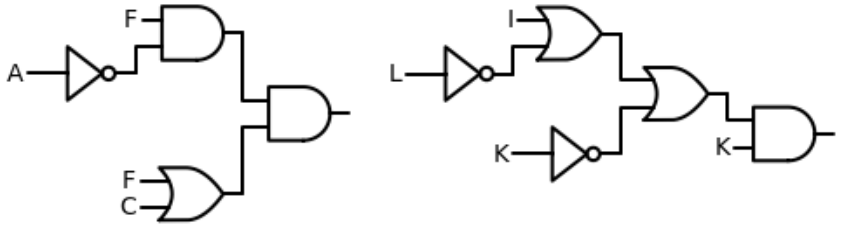

Locate your nine-digit student identification number in the table below and you will see the circuit schematics that have been assigned to you for Assignment 3. If you are unable to locate your student number below, then you must contact your instructor at robert.collier@scs.carleton.ca, ASAP and no later than Wednesday, October 6th by 11:59pm EST.

101235416	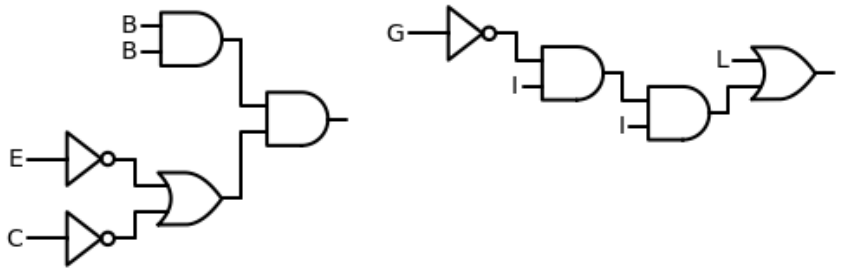
101235597	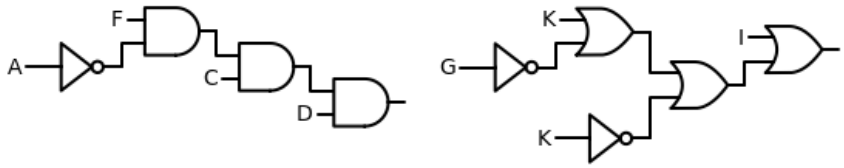
101235758	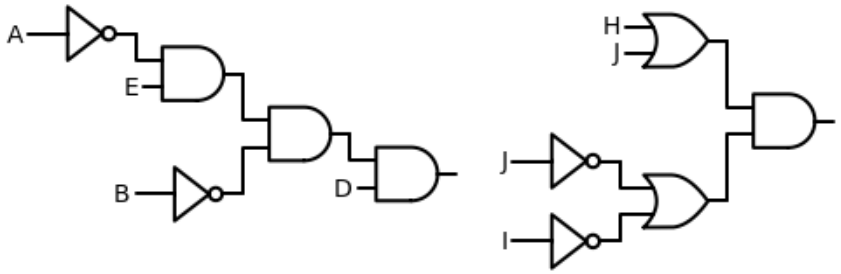
101235811	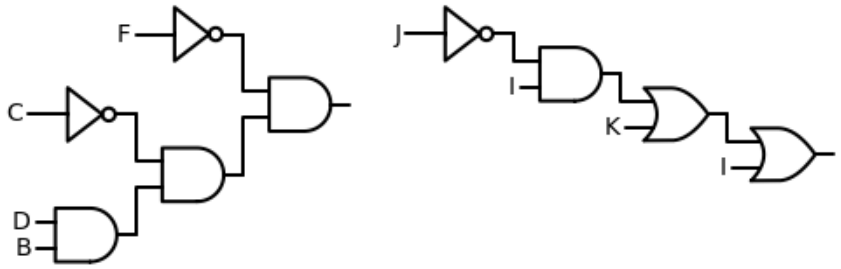

Locate your nine-digit student identification number in the table below and you will see the circuit schematics that have been assigned to you for Assignment 3. If you are unable to locate your student number below, then you must contact your instructor at robert.collier@scs.carleton.ca, ASAP and no later than Wednesday, October 6th by 11:59pm EST.

101235873	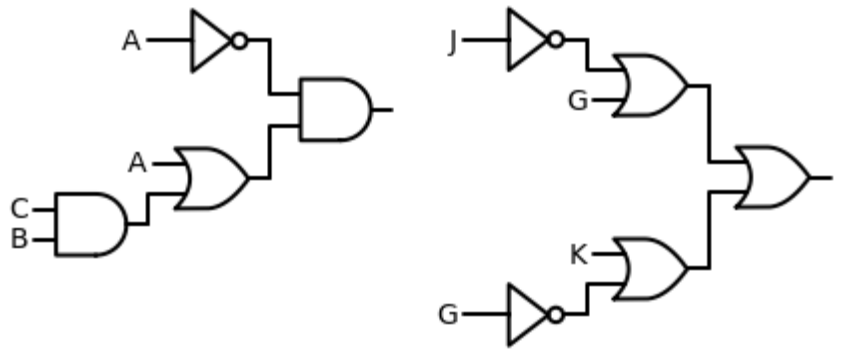
101235912	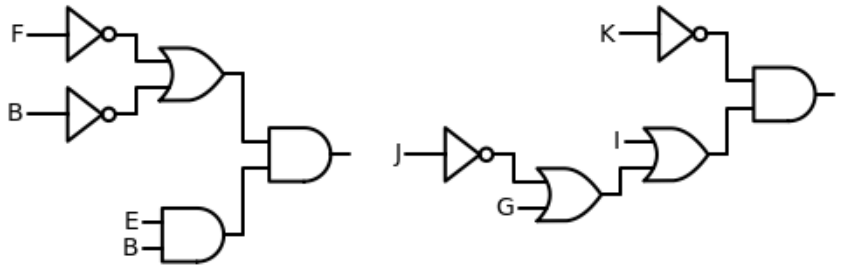
101235926	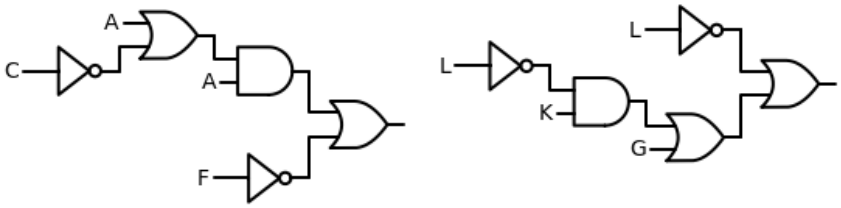
101235956	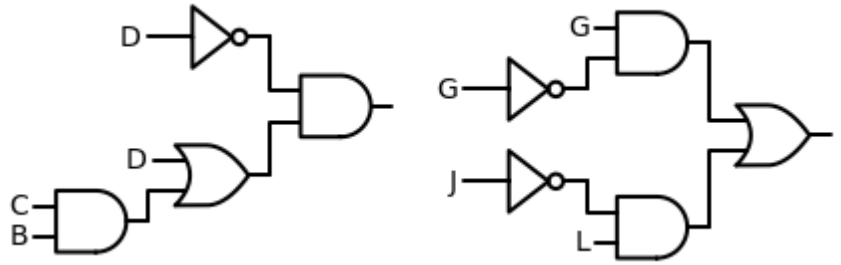

Locate your nine-digit student identification number in the table below and you will see the circuit schematics that have been assigned to you for Assignment 3. If you are unable to locate your student number below, then you must contact your instructor at robert.collier@scs.carleton.ca, ASAP and no later than Wednesday, October 6th by 11:59pm EST.

101236163	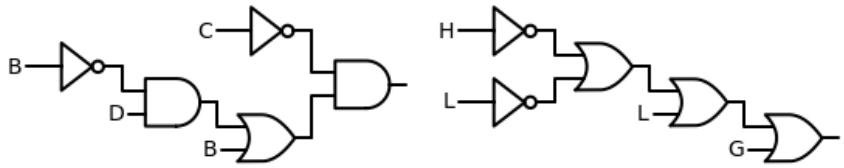
101236176	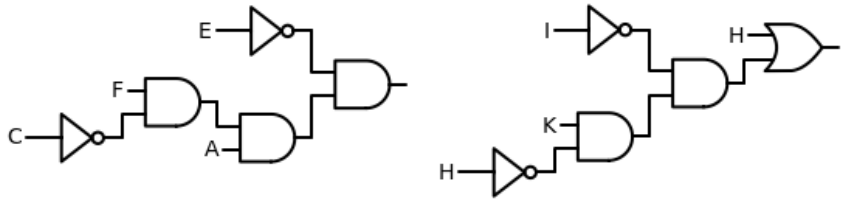
101236202	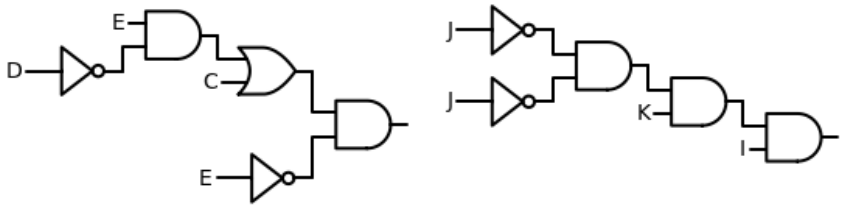
101236216	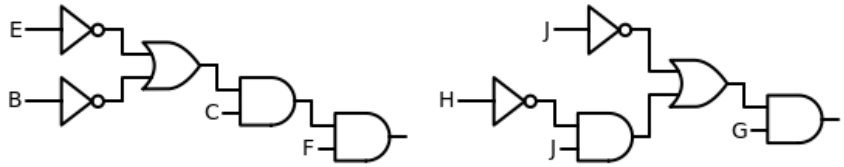
101236246	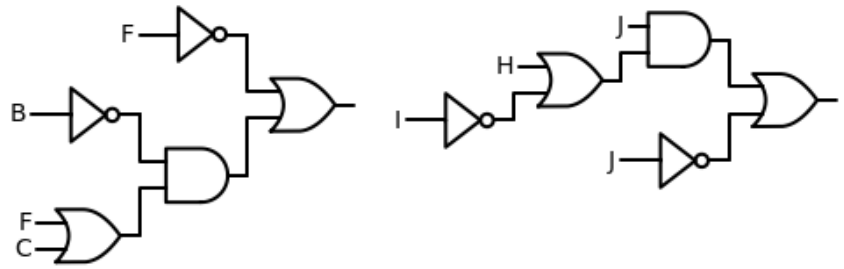
101236279	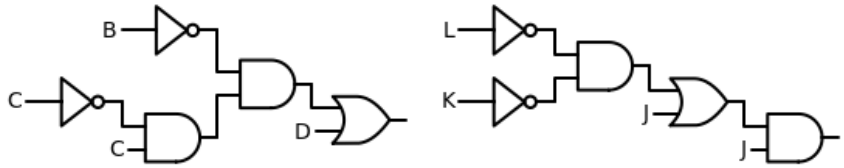

Locate your nine-digit student identification number in the table below and you will see the circuit schematics that have been assigned to you for Assignment 3. If you are unable to locate your student number below, then you must contact your instructor at robert.collier@scs.carleton.ca, ASAP and no later than Wednesday, October 6th by 11:59pm EST.

101236315	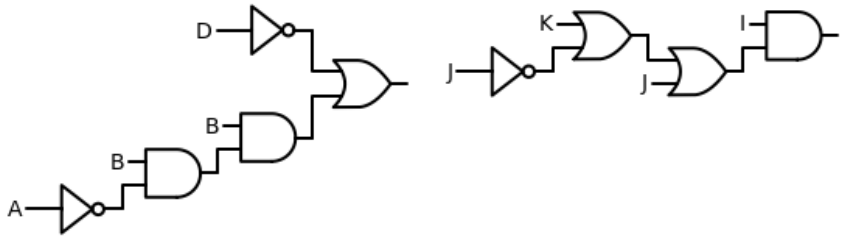
101236639	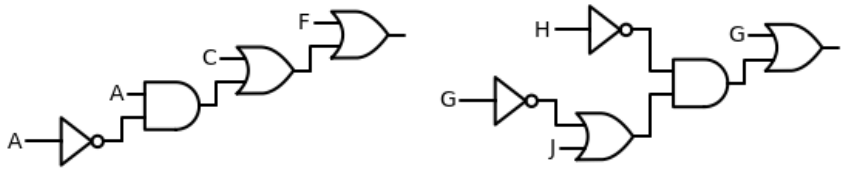
101236689	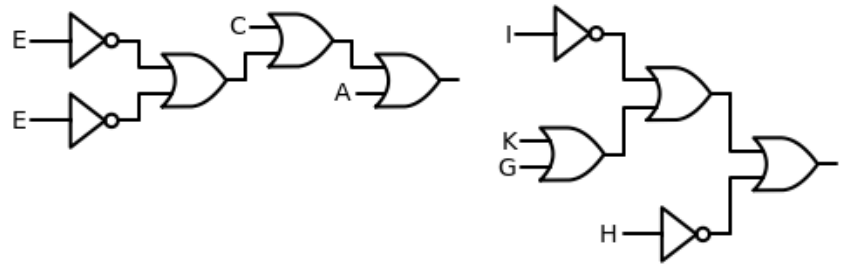
101236718	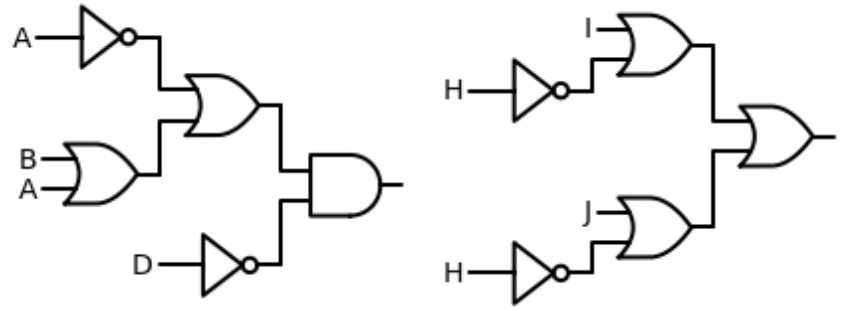

Locate your nine-digit student identification number in the table below and you will see the circuit schematics that have been assigned to you for Assignment 3. If you are unable to locate your student number below, then you must contact your instructor at robert.collier@scs.carleton.ca, ASAP and no later than Wednesday, October 6th by 11:59pm EST.

101236755	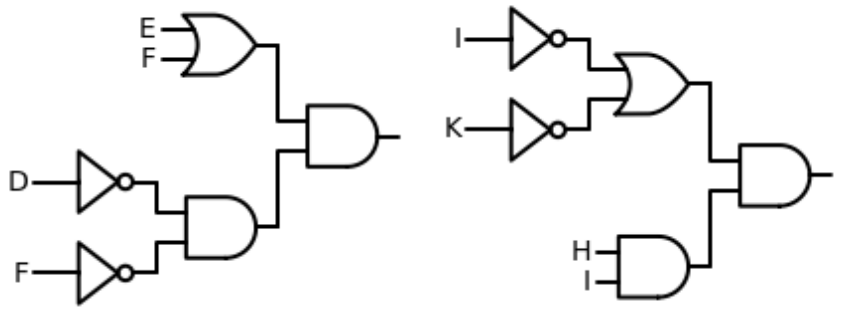
101236790	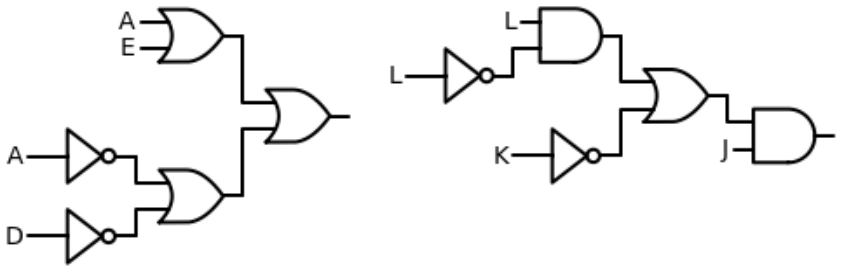
101236926	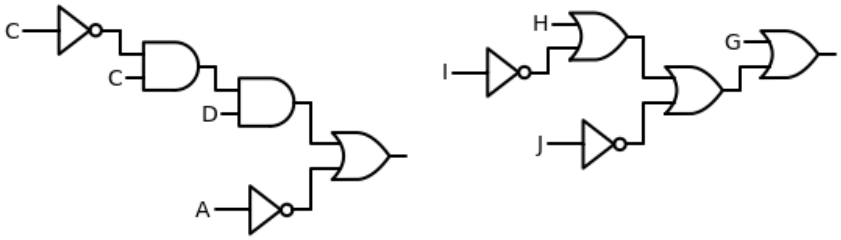
101236960	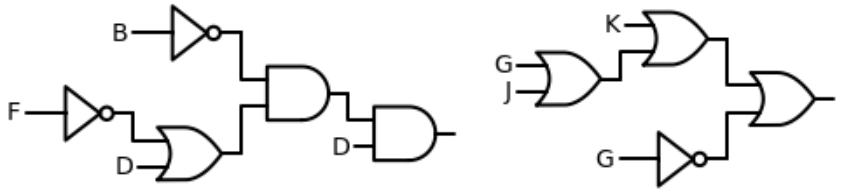
101236974	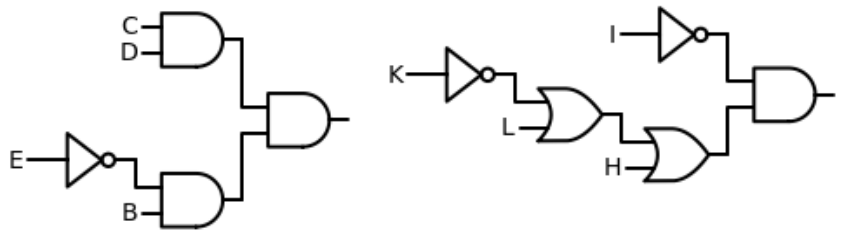

Locate your nine-digit student identification number in the table below and you will see the circuit schematics that have been assigned to you for Assignment 3. If you are unable to locate your student number below, then you must contact your instructor at robert.collier@scs.carleton.ca, ASAP and no later than Wednesday, October 6th by 11:59pm EST.

101237024	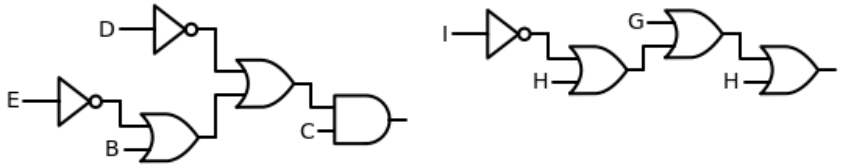
101237219	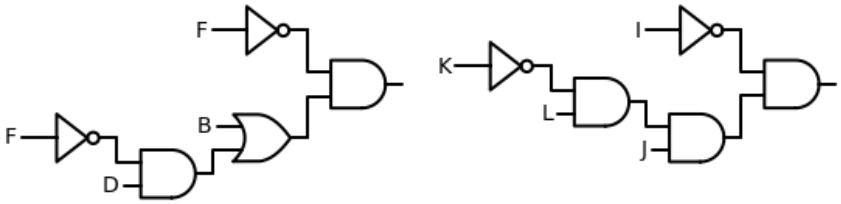
101237228	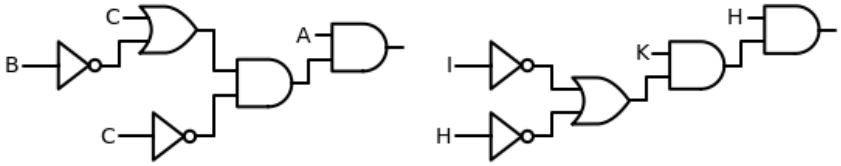
101237238	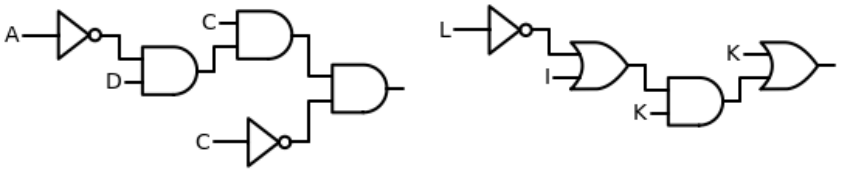
101237261	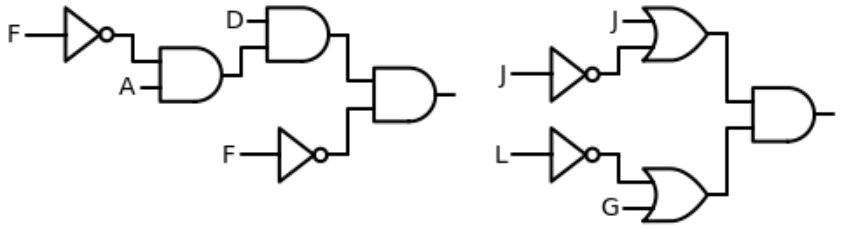

Locate your nine-digit student identification number in the table below and you will see the circuit schematics that have been assigned to you for Assignment 3. If you are unable to locate your student number below, then you must contact your instructor at robert.collier@scs.carleton.ca, ASAP and no later than Wednesday, October 6th by 11:59pm EST.

101237551	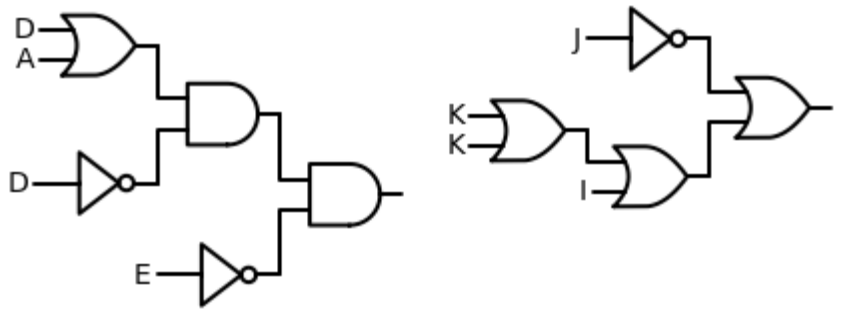
101237563	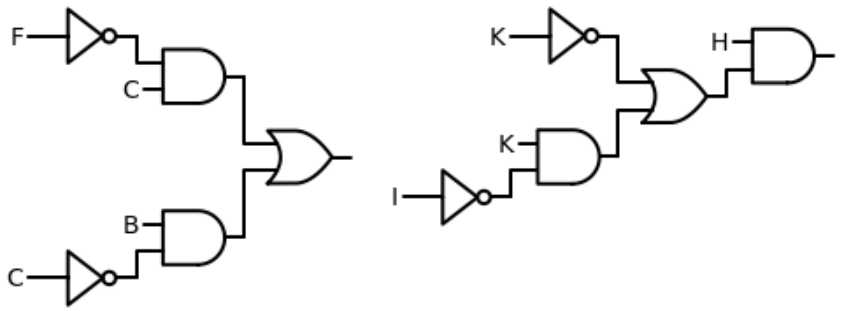
101237569	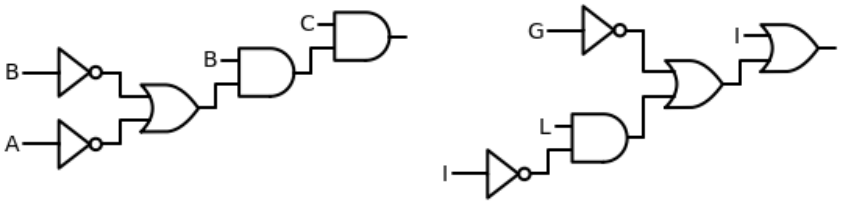
101237658	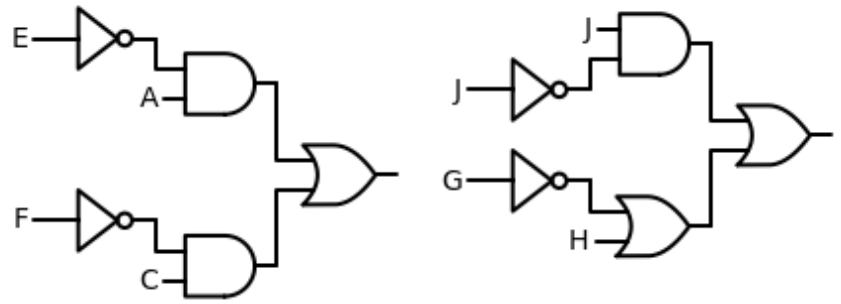

Locate your nine-digit student identification number in the table below and you will see the circuit schematics that have been assigned to you for Assignment 3. If you are unable to locate your student number below, then you must contact your instructor at robert.collier@scs.carleton.ca, ASAP and no later than Wednesday, October 6th by 11:59pm EST.

101237679	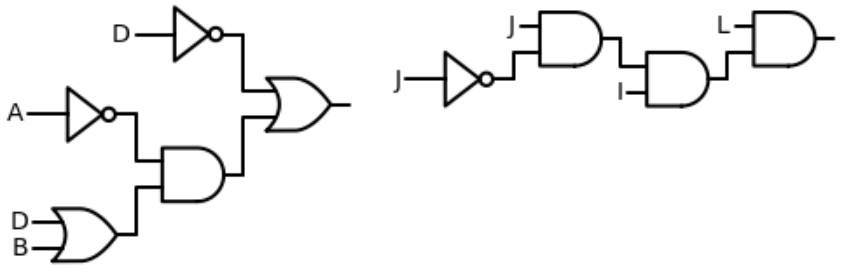
101237681	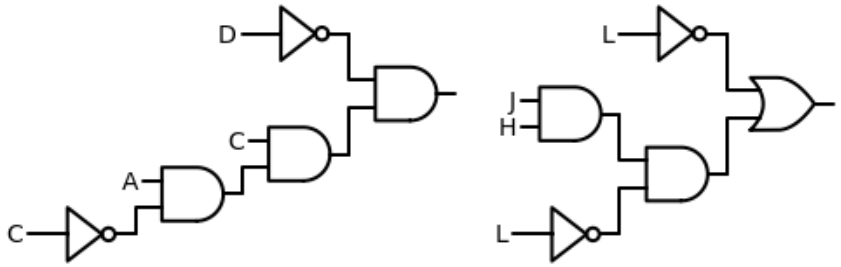
101237695	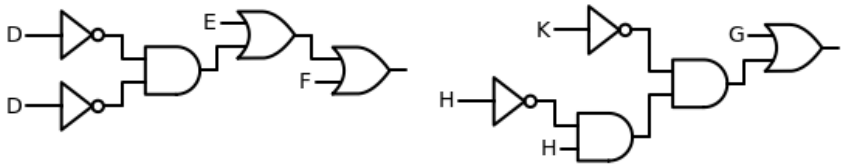
101237710	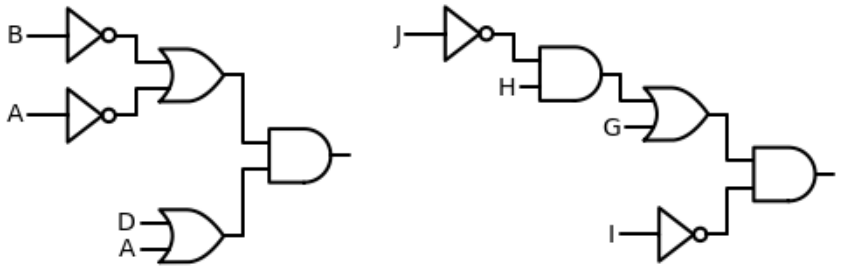
101237753	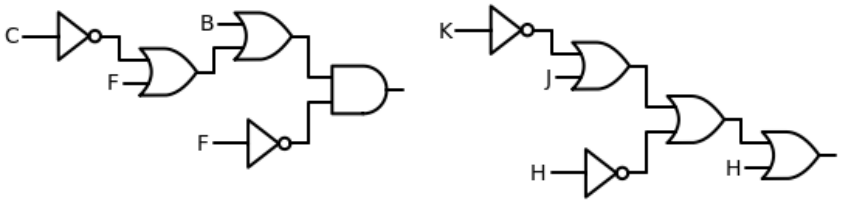

Locate your nine-digit student identification number in the table below and you will see the circuit schematics that have been assigned to you for Assignment 3. If you are unable to locate your student number below, then you must contact your instructor at robert.collier@scs.carleton.ca, ASAP and no later than Wednesday, October 6th by 11:59pm EST.

101238176	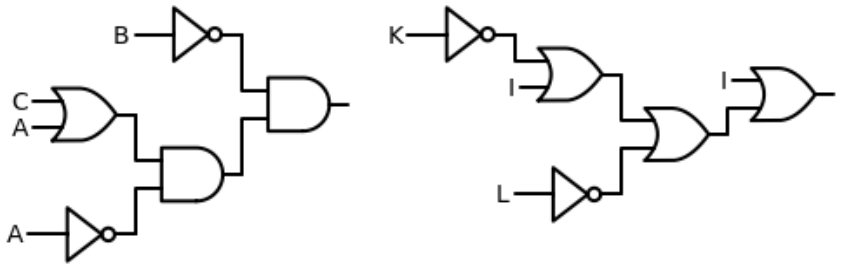
101238178	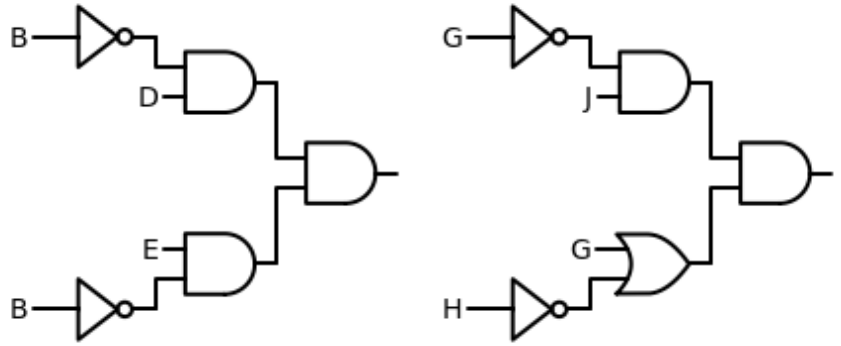
101238247	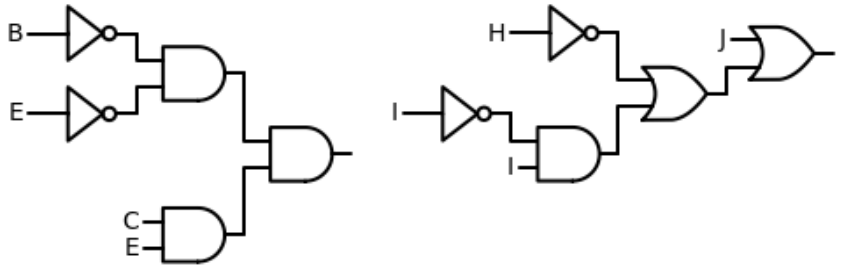
101238276	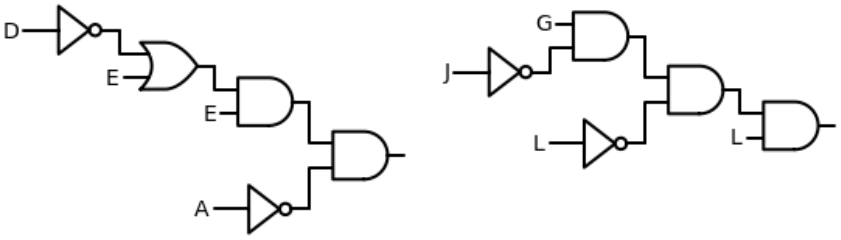

Locate your nine-digit student identification number in the table below and you will see the circuit schematics that have been assigned to you for Assignment 3. If you are unable to locate your student number below, then you must contact your instructor at robert.collier@scs.carleton.ca, ASAP and no later than Wednesday, October 6th by 11:59pm EST.

101238302	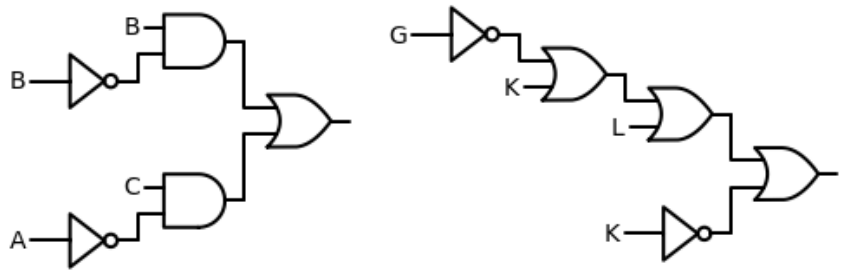
101238607	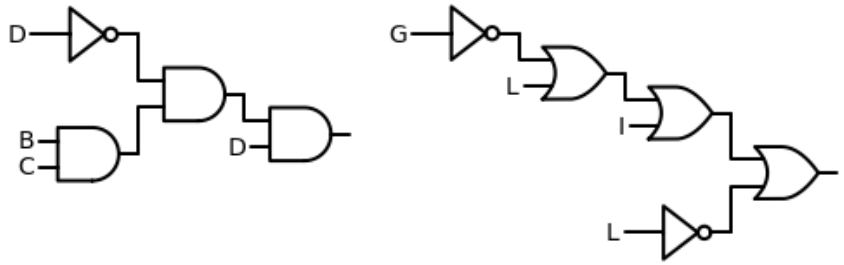
101238763	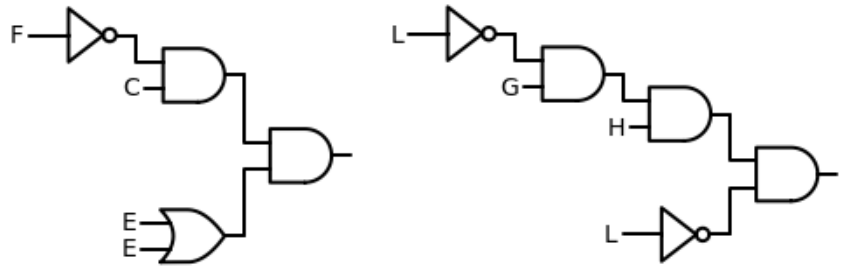
101238832	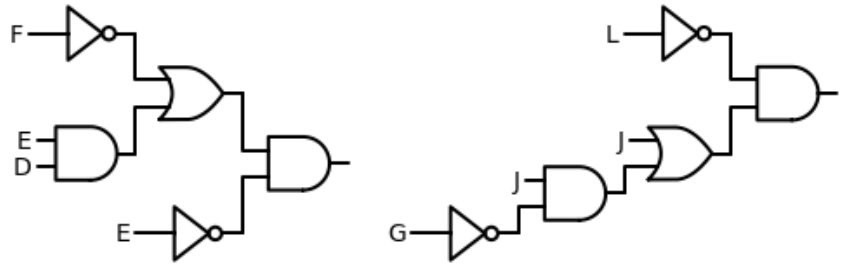
101238835	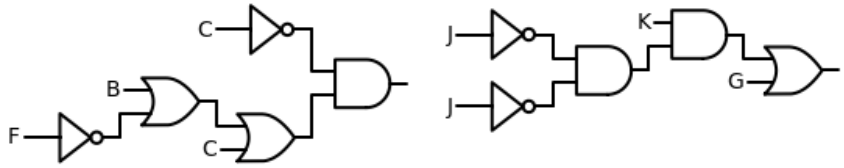

Locate your nine-digit student identification number in the table below and you will see the circuit schematics that have been assigned to you for Assignment 3. If you are unable to locate your student number below, then you must contact your instructor at robert.collier@scs.carleton.ca, ASAP and no later than Wednesday, October 6th by 11:59pm EST.

101238914	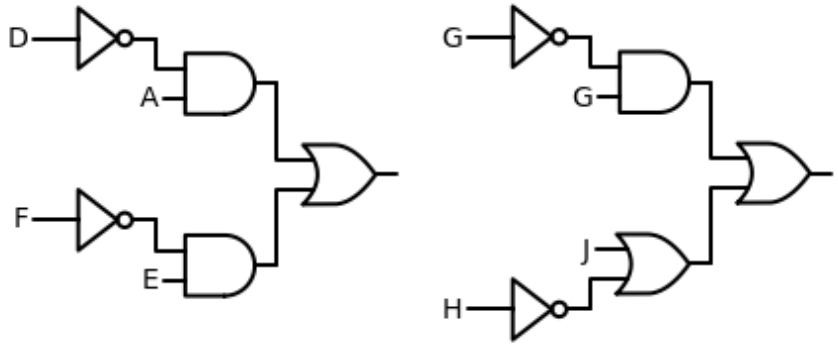
101239305	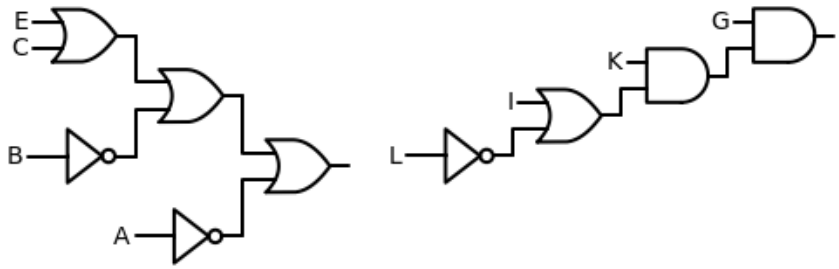
101239518	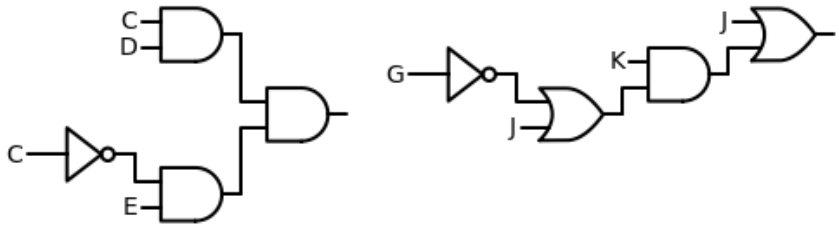
101239627	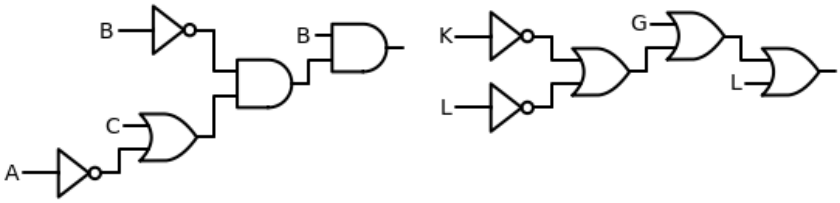
101239629	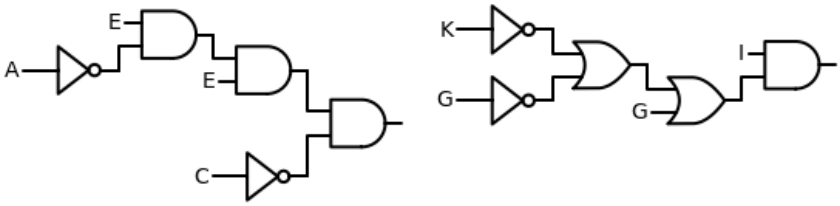

Locate your nine-digit student identification number in the table below and you will see the circuit schematics that have been assigned to you for Assignment 3. If you are unable to locate your student number below, then you must contact your instructor at robert.collier@scs.carleton.ca, ASAP and no later than Wednesday, October 6th by 11:59pm EST.

101239658	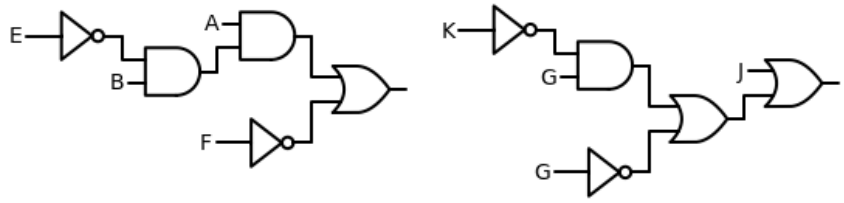
101239697	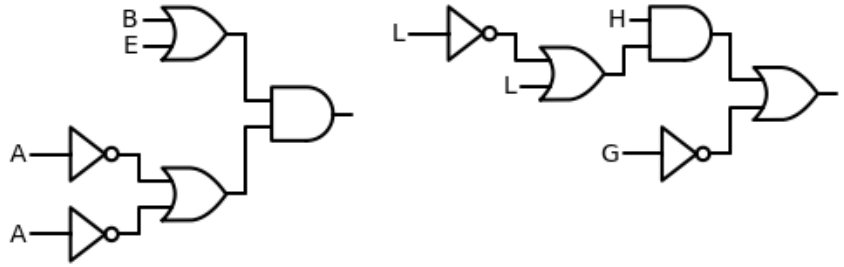
101239703	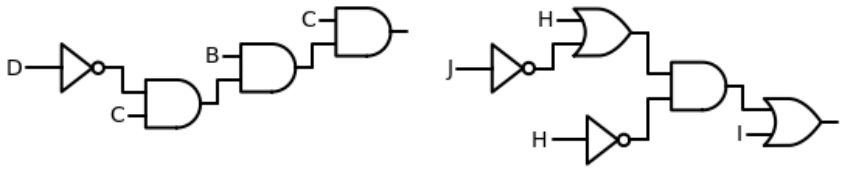
101239711	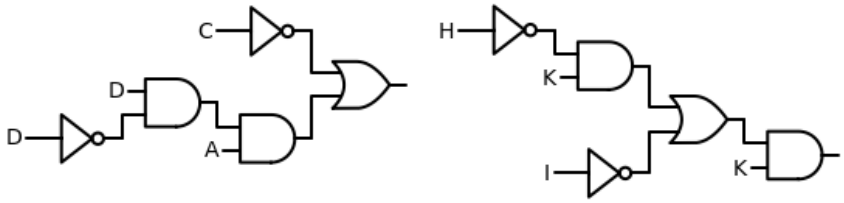
101239795	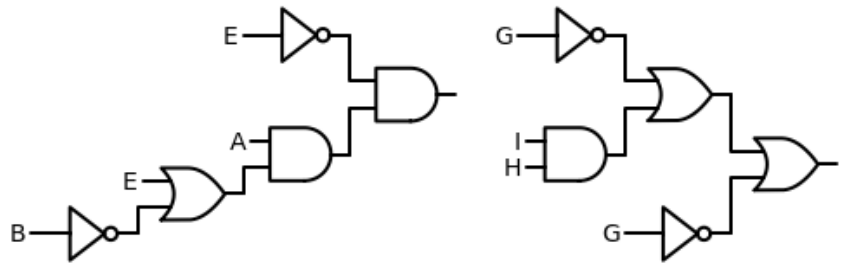

Locate your nine-digit student identification number in the table below and you will see the circuit schematics that have been assigned to you for Assignment 3. If you are unable to locate your student number below, then you must contact your instructor at robert.collier@scs.carleton.ca, ASAP and no later than Wednesday, October 6th by 11:59pm EST.

101239827	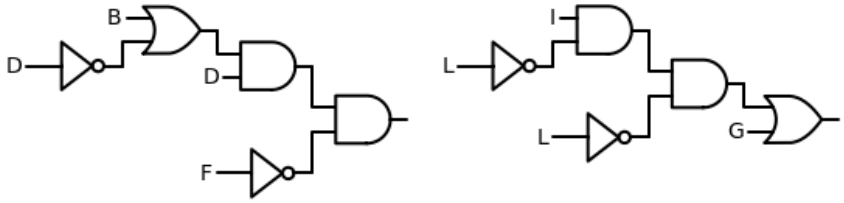
101240122	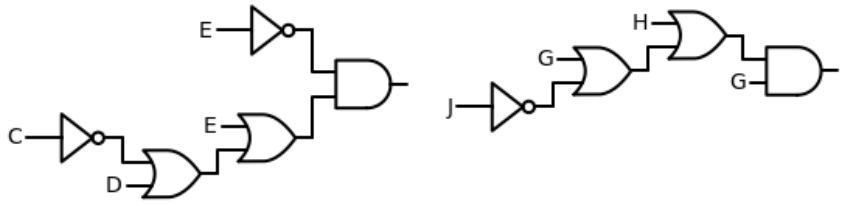
101240204	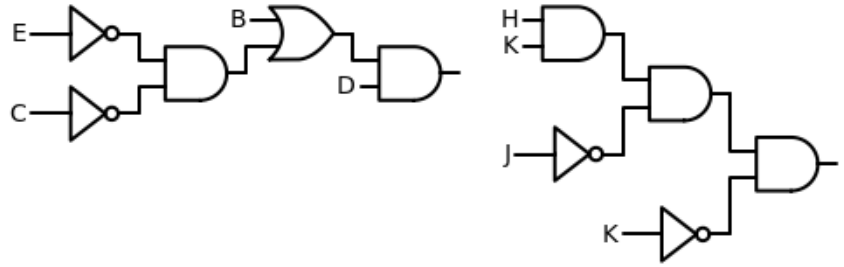
101240264	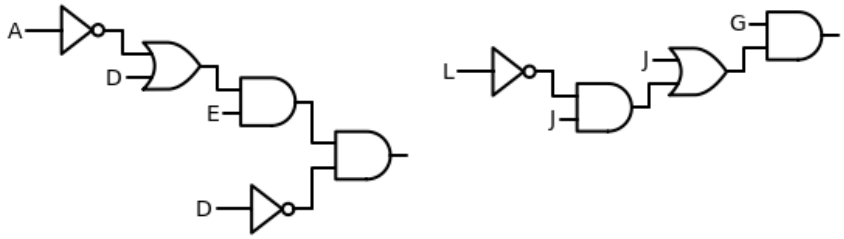
101240314	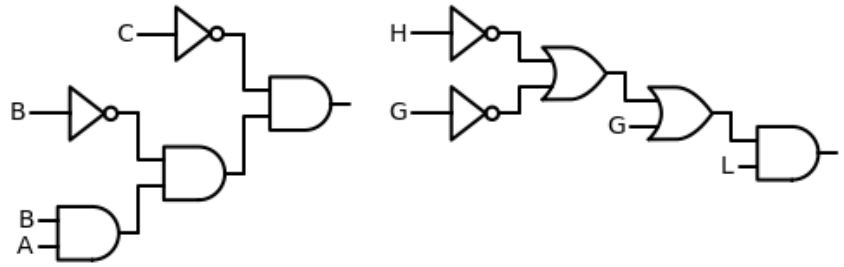

Locate your nine-digit student identification number in the table below and you will see the circuit schematics that have been assigned to you for Assignment 3. If you are unable to locate your student number below, then you must contact your instructor at robert.collier@scs.carleton.ca, ASAP and no later than Wednesday, October 6th by 11:59pm EST.

101240325	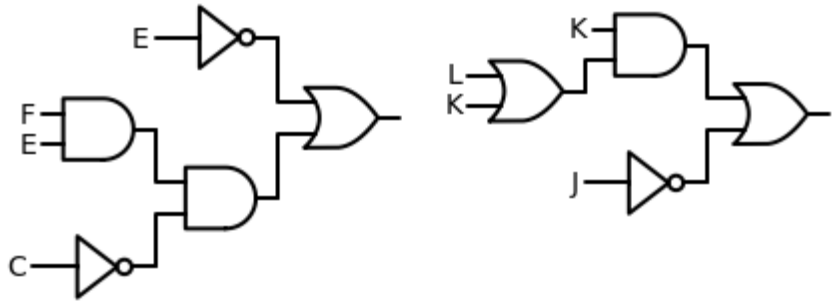
101240348	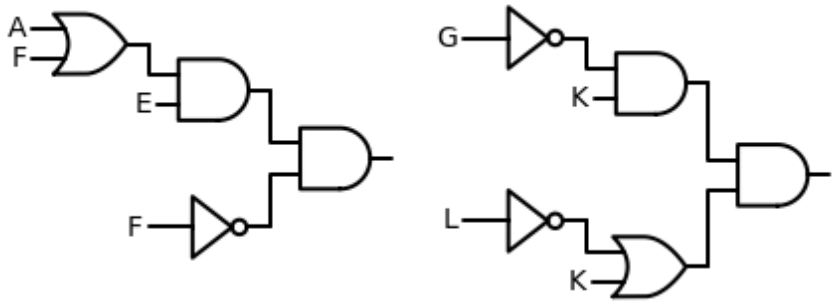
101240351	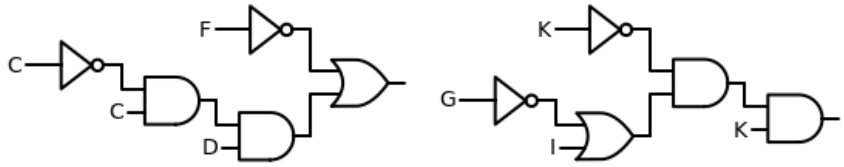
101240377	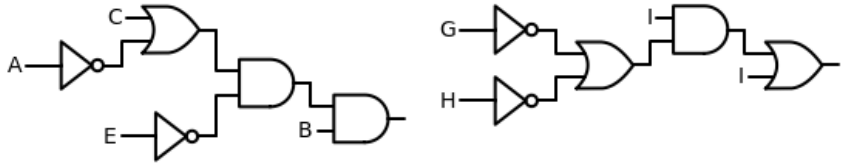
101240480	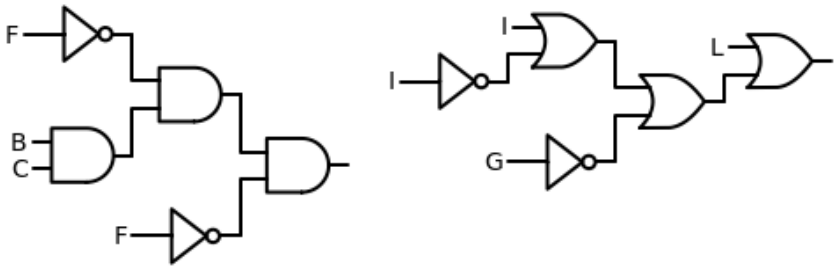

Locate your nine-digit student identification number in the table below and you will see the circuit schematics that have been assigned to you for Assignment 3. If you are unable to locate your student number below, then you must contact your instructor at robert.collier@scs.carleton.ca, ASAP and no later than Wednesday, October 6th by 11:59pm EST.

101240486	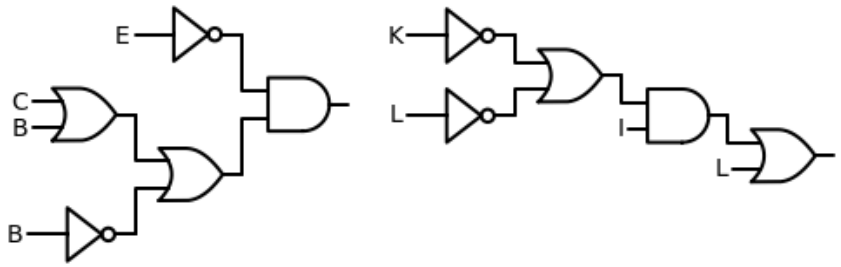
101240512	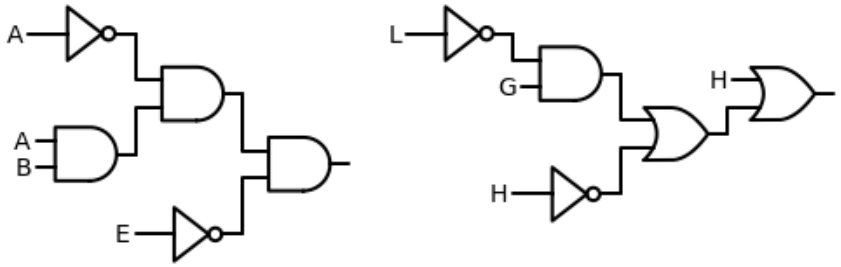
101240586	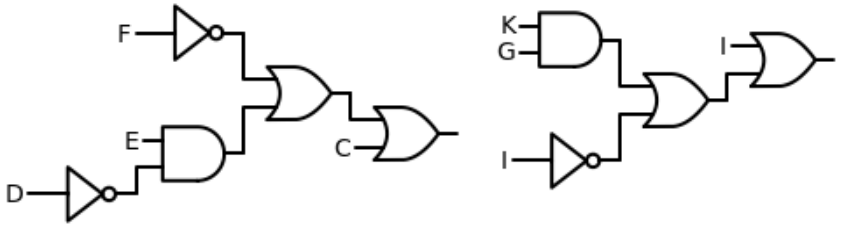
101240725	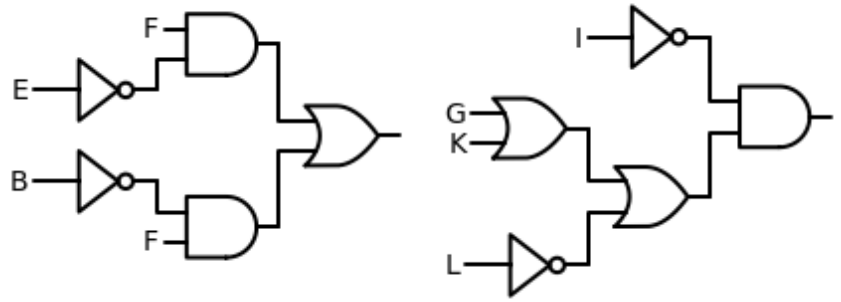

Locate your nine-digit student identification number in the table below and you will see the circuit schematics that have been assigned to you for Assignment 3. If you are unable to locate your student number below, then you must contact your instructor at robert.collier@scs.carleton.ca, ASAP and no later than Wednesday, October 6th by 11:59pm EST.

101240726	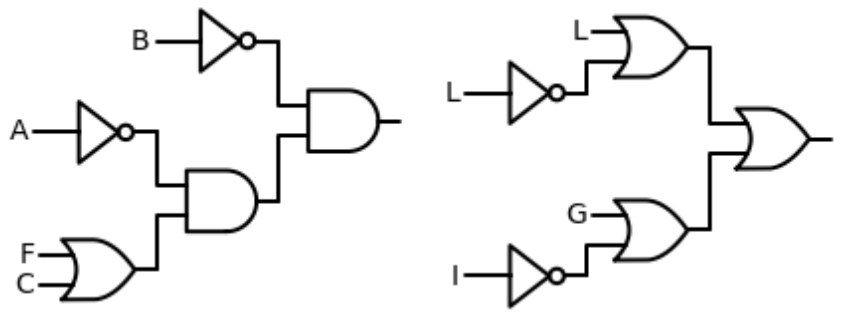
101240833	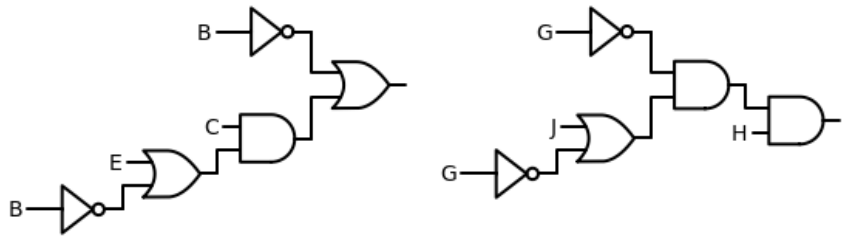
101241220	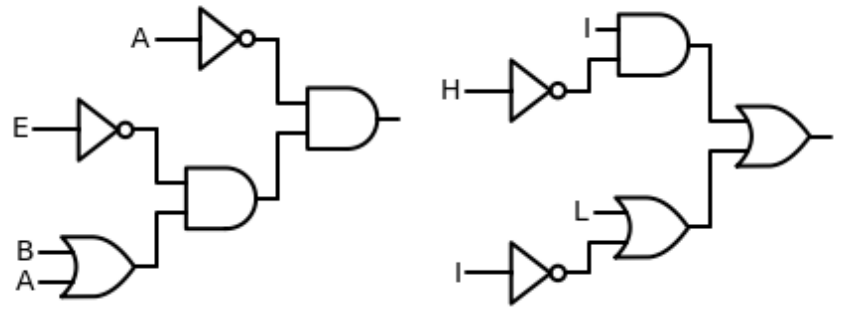
101241353	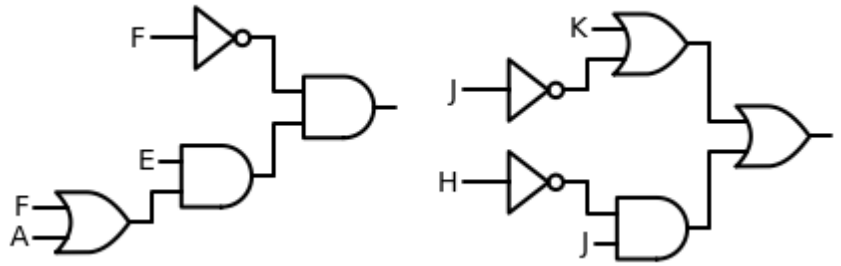

Locate your nine-digit student identification number in the table below and you will see the circuit schematics that have been assigned to you for Assignment 3. If you are unable to locate your student number below, then you must contact your instructor at robert.collier@scs.carleton.ca, ASAP and no later than Wednesday, October 6th by 11:59pm EST.

101241425	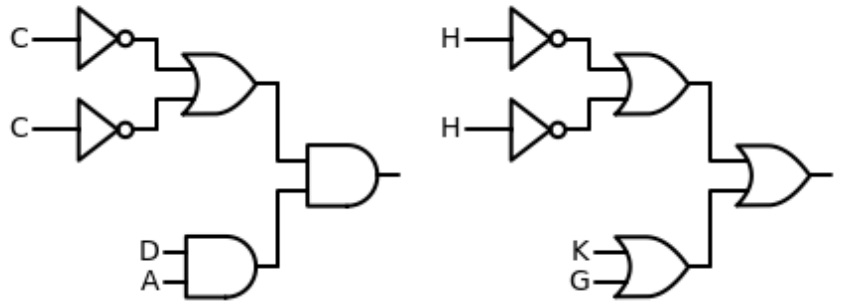
101241684	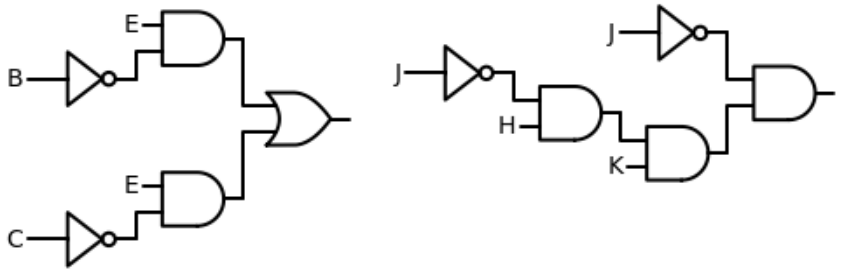
101241867	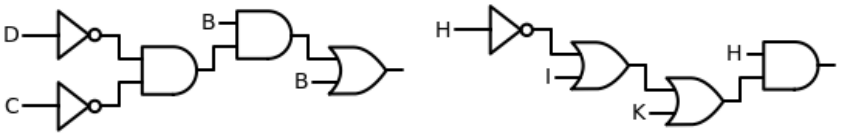
101241880	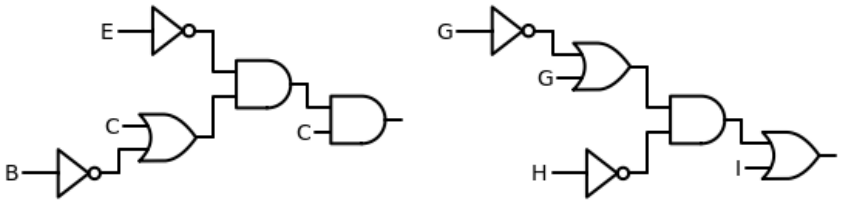
101241900	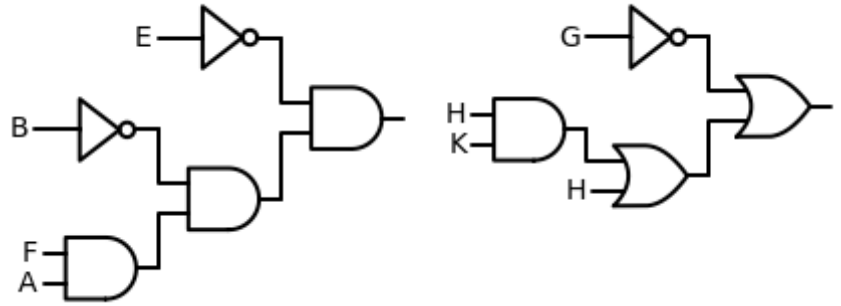

Locate your nine-digit student identification number in the table below and you will see the circuit schematics that have been assigned to you for Assignment 3. If you are unable to locate your student number below, then you must contact your instructor at robert.collier@scs.carleton.ca, ASAP and no later than Wednesday, October 6th by 11:59pm EST.

101241935	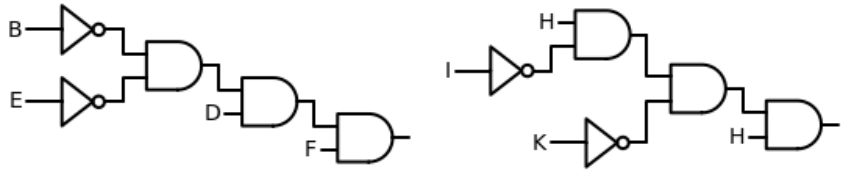
101242356	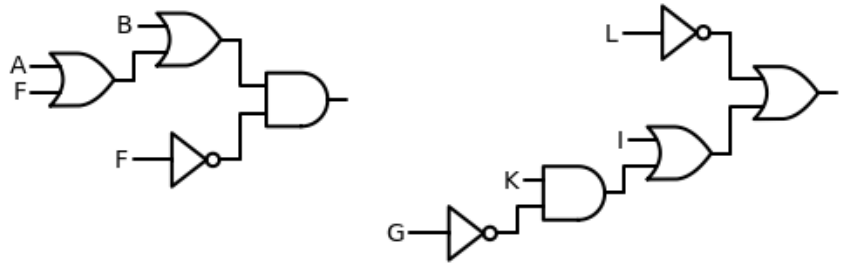
101242606	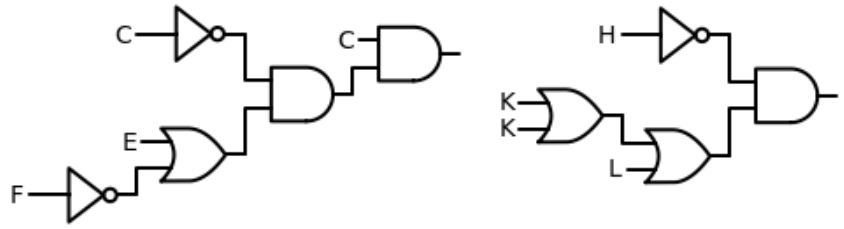
101243221	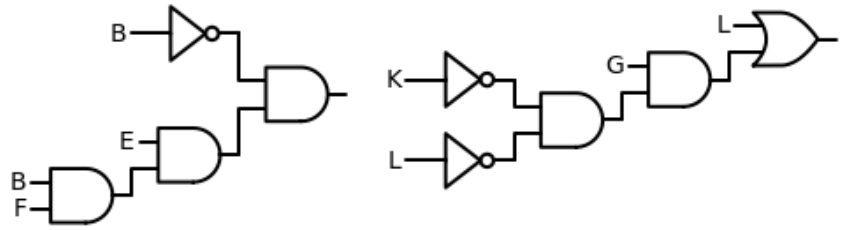
101243391	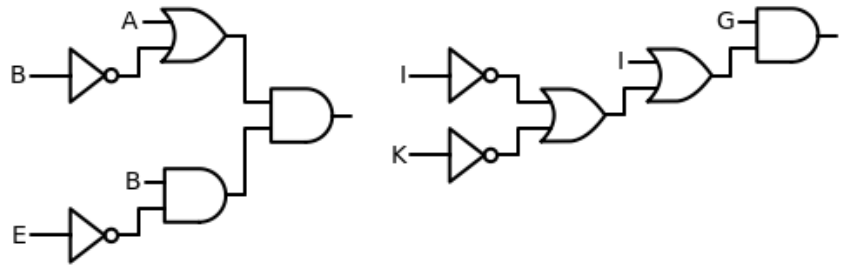

Locate your nine-digit student identification number in the table below and you will see the circuit schematics that have been assigned to you for Assignment 3. If you are unable to locate your student number below, then you must contact your instructor at robert.collier@scs.carleton.ca, ASAP and no later than Wednesday, October 6th by 11:59pm EST.

101243487	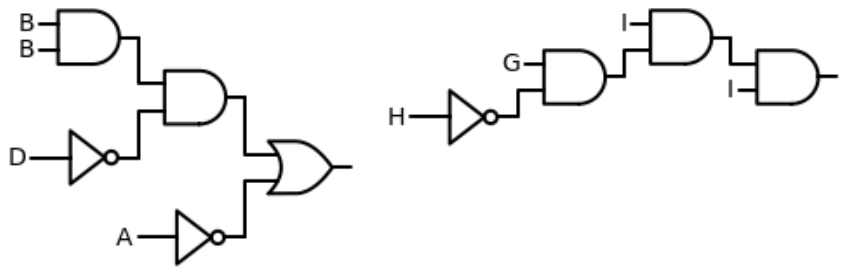
101243550	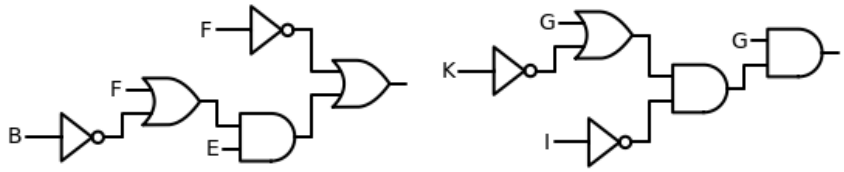
101243663	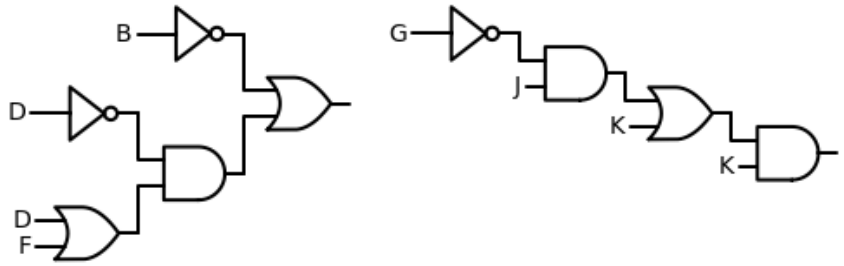
101243848	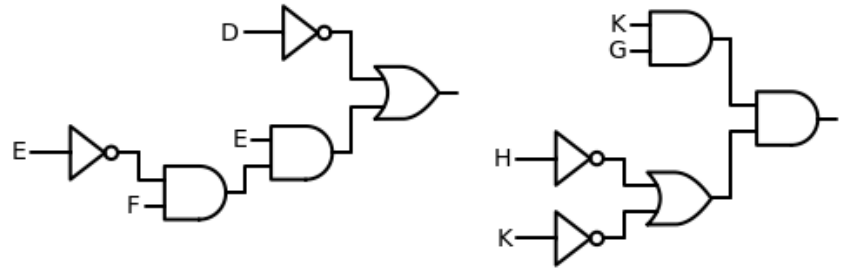
101243979	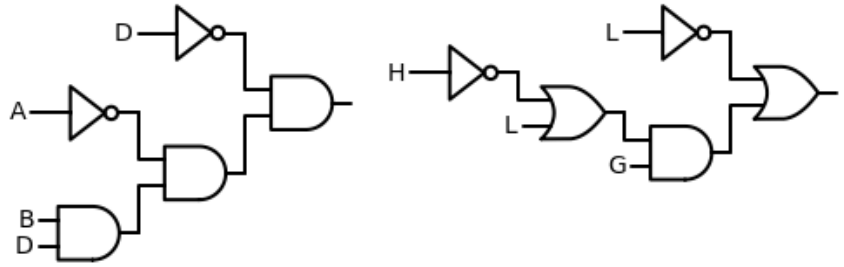

Locate your nine-digit student identification number in the table below and you will see the circuit schematics that have been assigned to you for Assignment 3. If you are unable to locate your student number below, then you must contact your instructor at robert.collier@scs.carleton.ca, ASAP and no later than Wednesday, October 6th by 11:59pm EST.

101243992	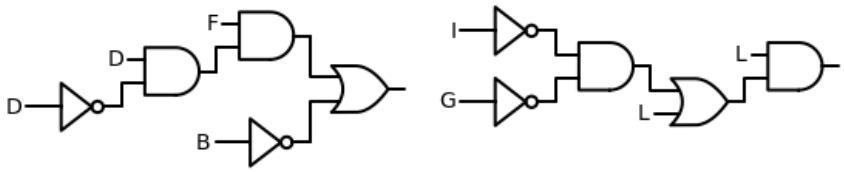
101244091	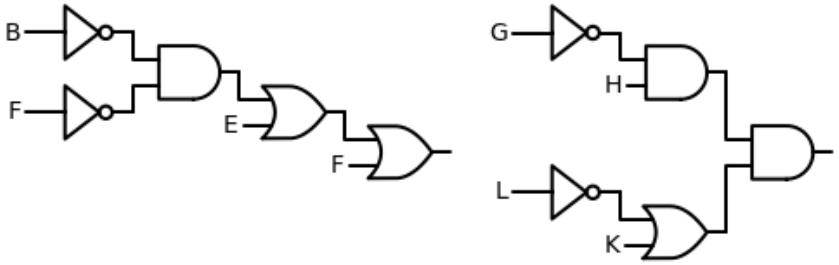
101244122	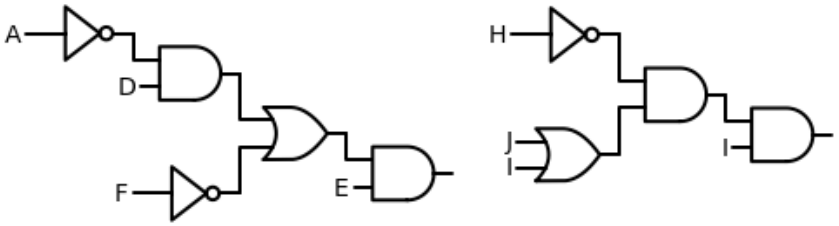
101244203	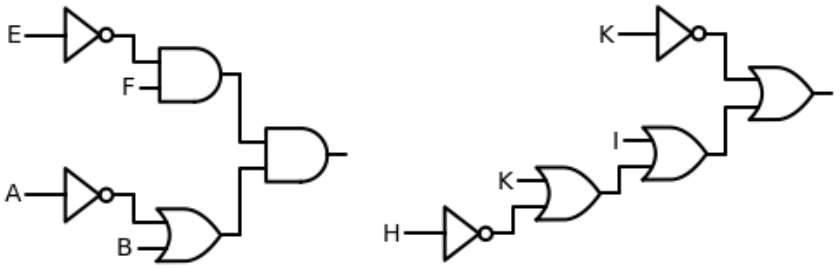
101244311	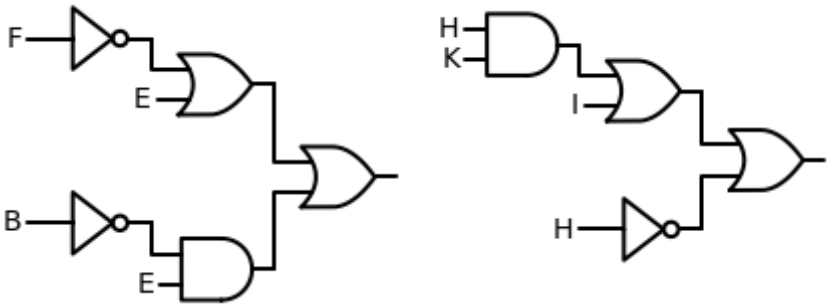

Locate your nine-digit student identification number in the table below and you will see the circuit schematics that have been assigned to you for Assignment 3. If you are unable to locate your student number below, then you must contact your instructor at robert.collier@scs.carleton.ca, ASAP and no later than Wednesday, October 6th by 11:59pm EST.

101244401	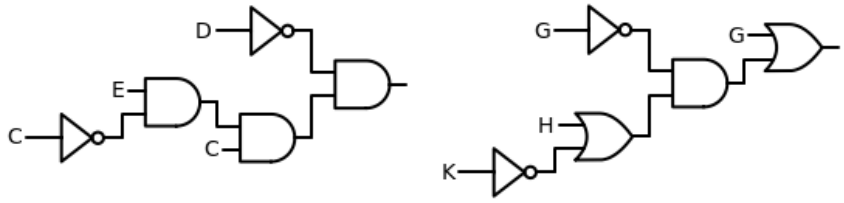
101244456	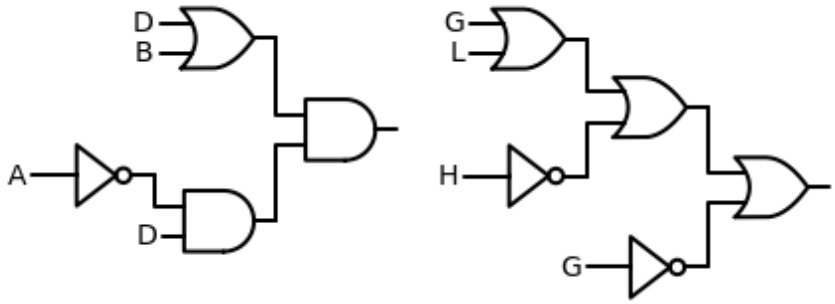
101244507	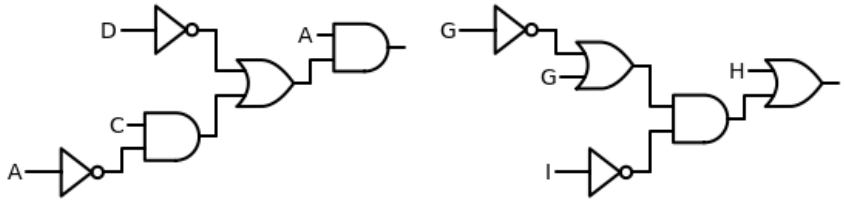
101244880	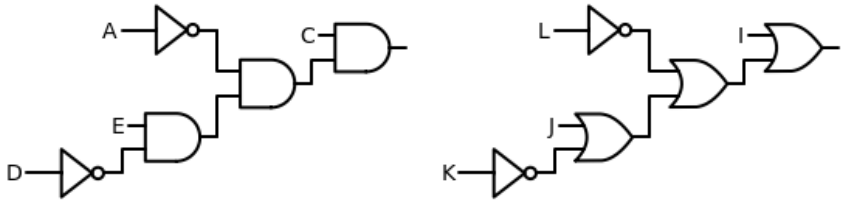
101245008	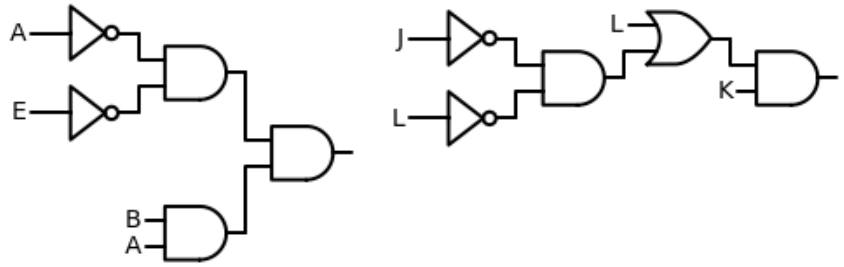

Locate your nine-digit student identification number in the table below and you will see the circuit schematics that have been assigned to you for Assignment 3. If you are unable to locate your student number below, then you must contact your instructor at robert.collier@scs.carleton.ca, ASAP and no later than Wednesday, October 6th by 11:59pm EST.

101245319	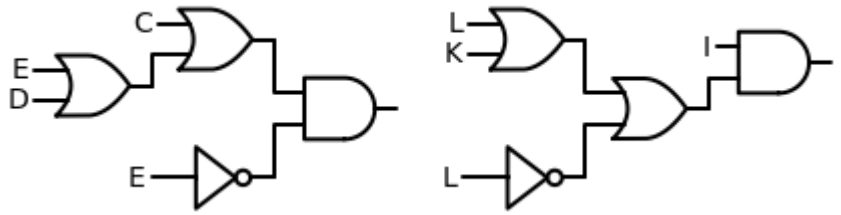
101245491	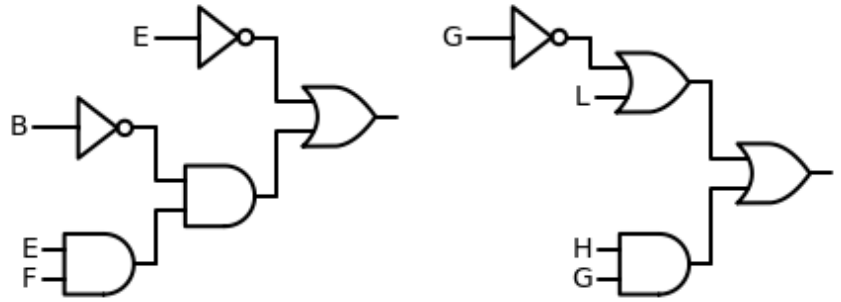
101245500	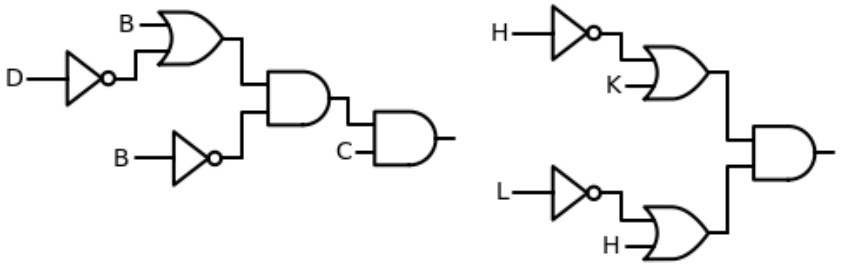
101245758	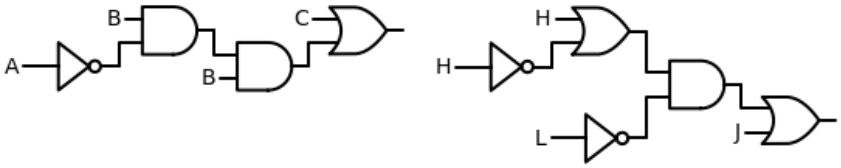
101245865	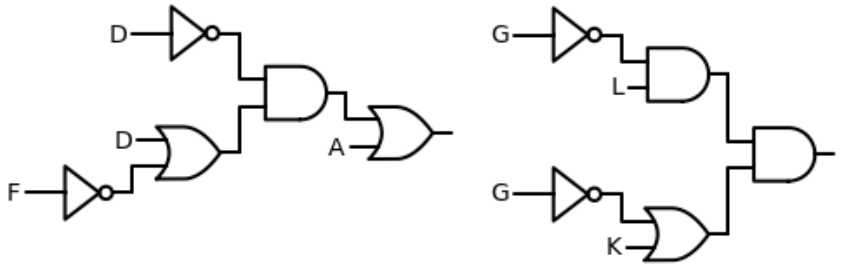

Locate your nine-digit student identification number in the table below and you will see the circuit schematics that have been assigned to you for Assignment 3. If you are unable to locate your student number below, then you must contact your instructor at robert.collier@scs.carleton.ca, ASAP and no later than Wednesday, October 6th by 11:59pm EST.

101245922	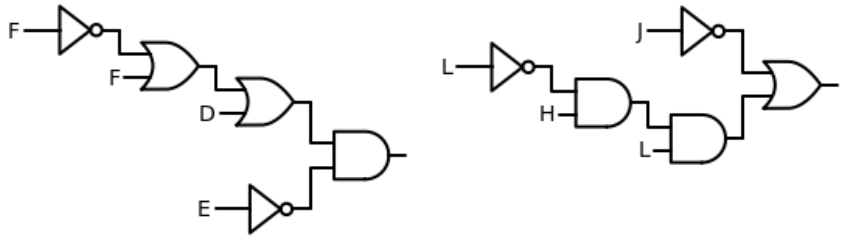
101246007	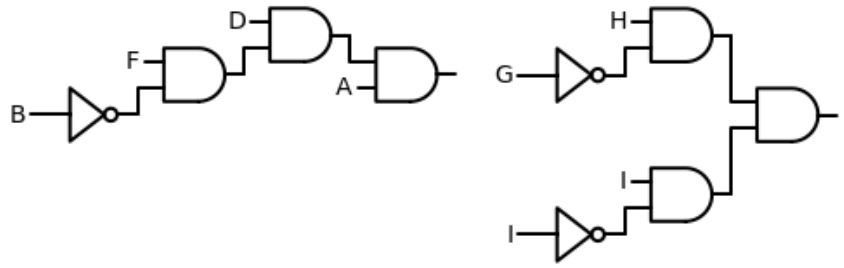
101246212	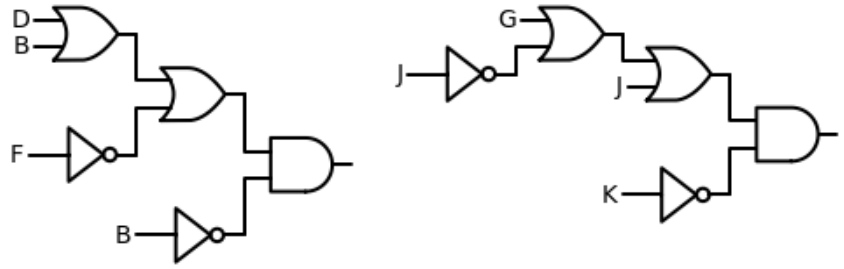
101246217	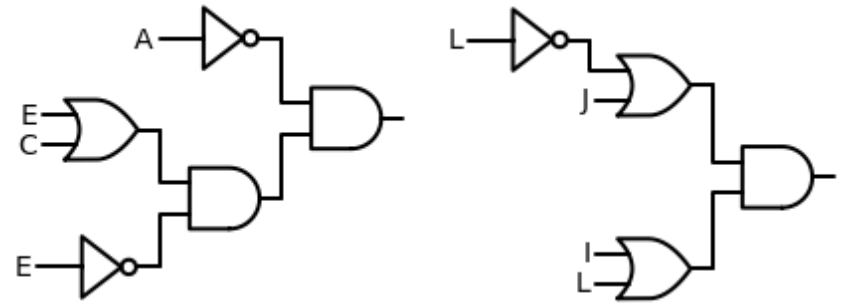

Locate your nine-digit student identification number in the table below and you will see the circuit schematics that have been assigned to you for Assignment 3. If you are unable to locate your student number below, then you must contact your instructor at robert.collier@scs.carleton.ca, ASAP and no later than Wednesday, October 6th by 11:59pm EST.

101246259	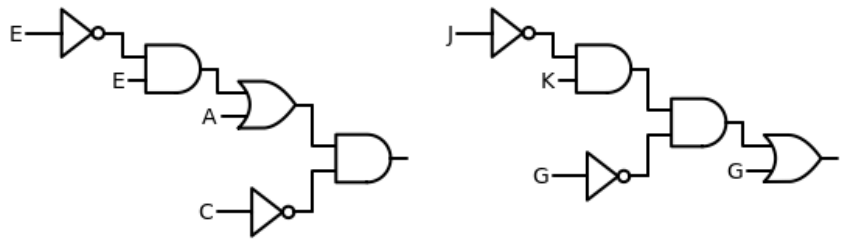
101246518	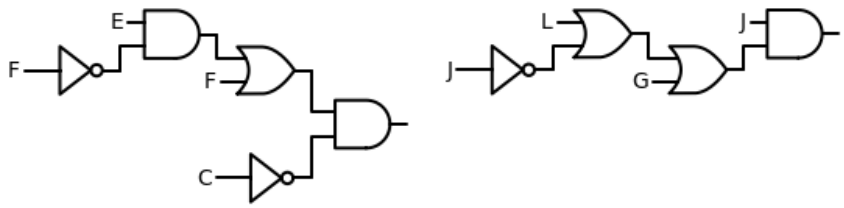
101246804	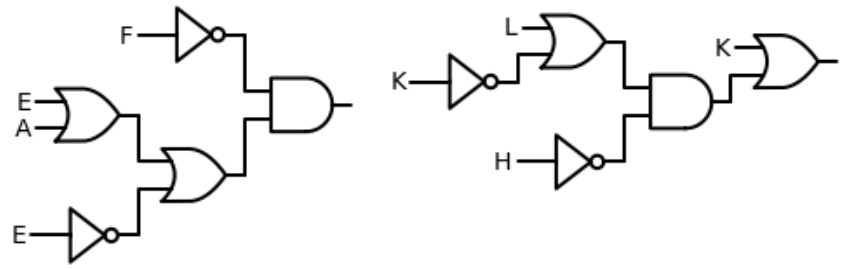
101246952	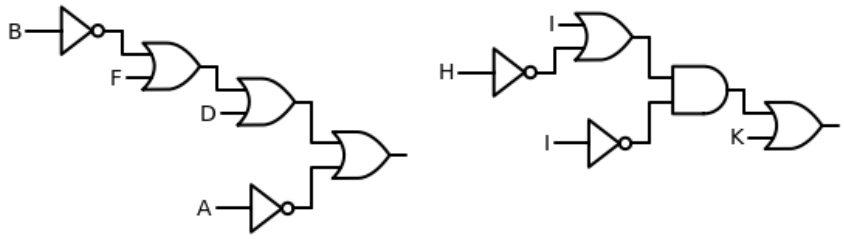
101247025	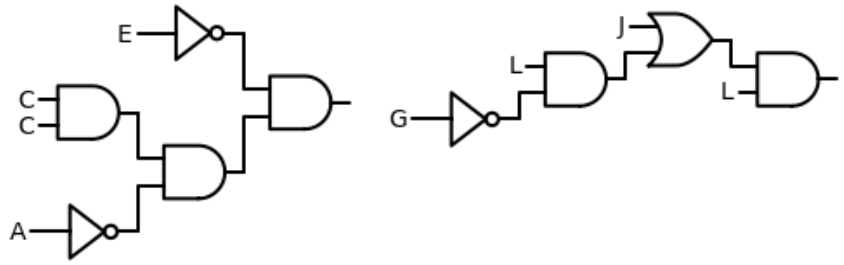

Locate your nine-digit student identification number in the table below and you will see the circuit schematics that have been assigned to you for Assignment 3. If you are unable to locate your student number below, then you must contact your instructor at robert.collier@scs.carleton.ca, ASAP and no later than Wednesday, October 6th by 11:59pm EST.

101247126	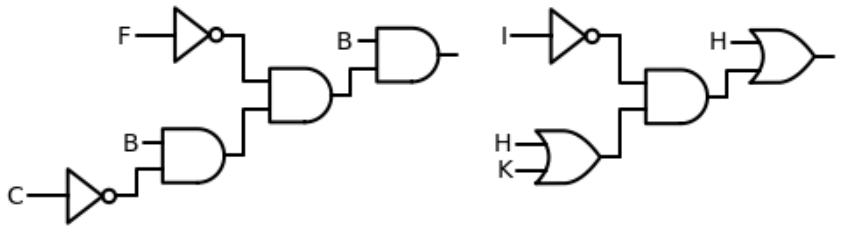
101247136	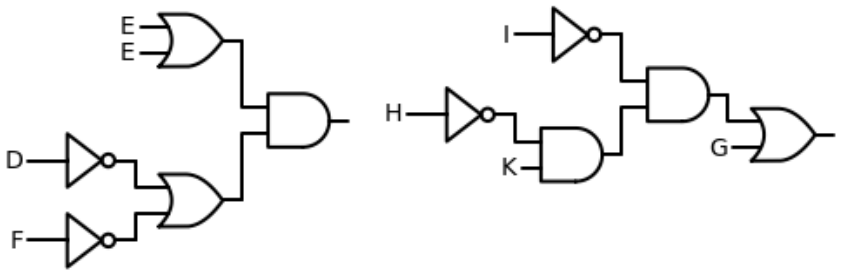
101247178	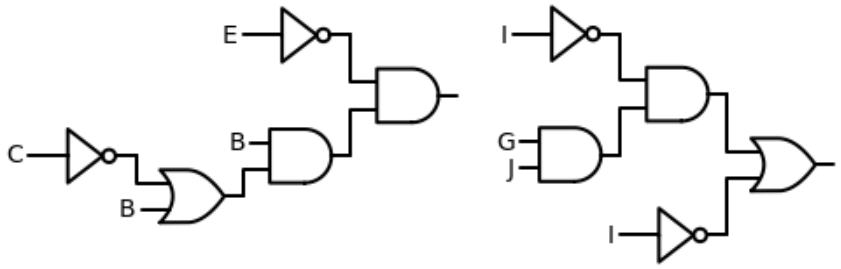
101247506	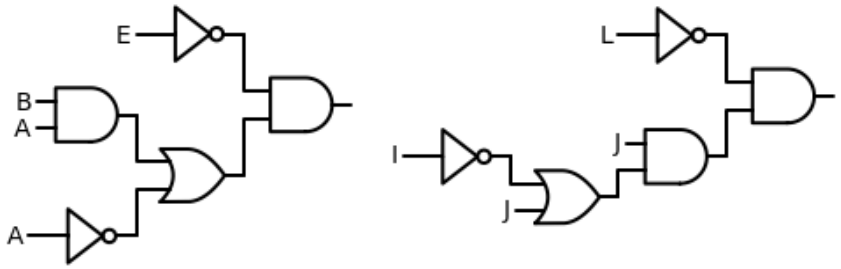
101247579	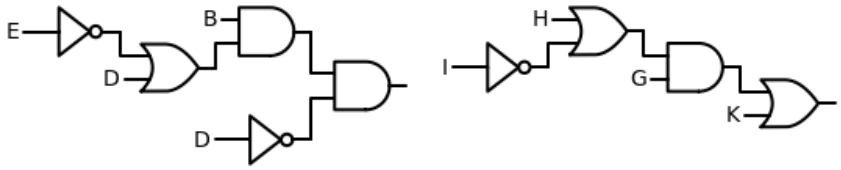

Locate your nine-digit student identification number in the table below and you will see the circuit schematics that have been assigned to you for Assignment 3. If you are unable to locate your student number below, then you must contact your instructor at robert.collier@scs.carleton.ca, ASAP and no later than Wednesday, October 6th by 11:59pm EST.

101247657	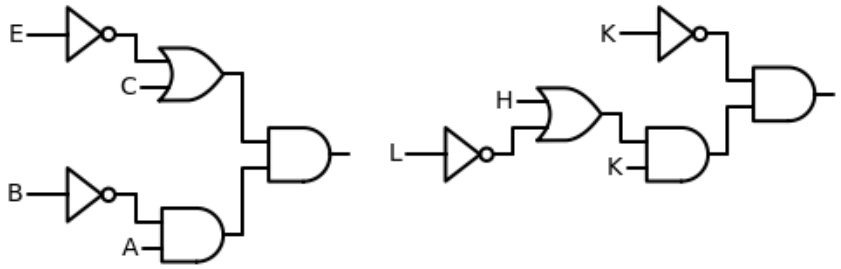
101247671	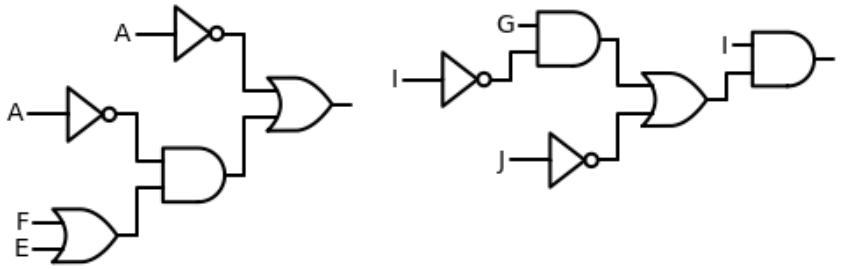
101247854	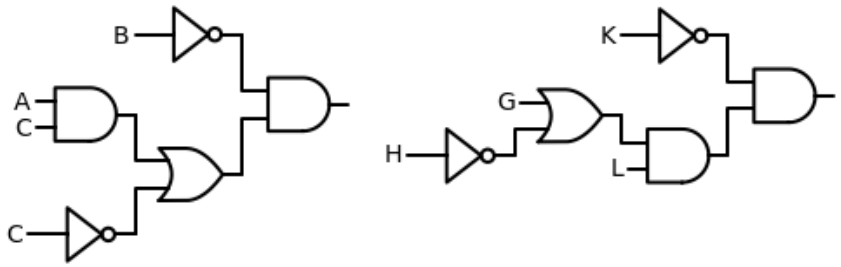
101247989	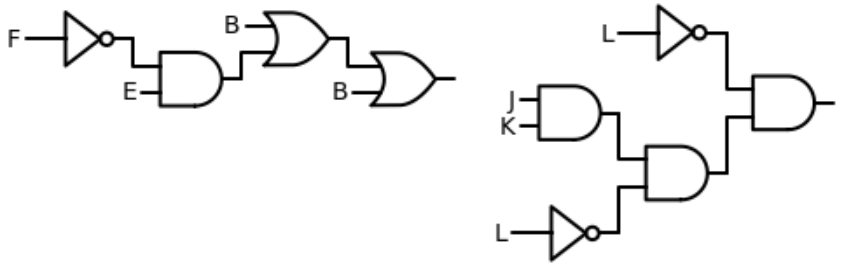

Locate your nine-digit student identification number in the table below and you will see the circuit schematics that have been assigned to you for Assignment 3. If you are unable to locate your student number below, then you must contact your instructor at robert.collier@scs.carleton.ca, ASAP and no later than Wednesday, October 6th by 11:59pm EST.

101248152	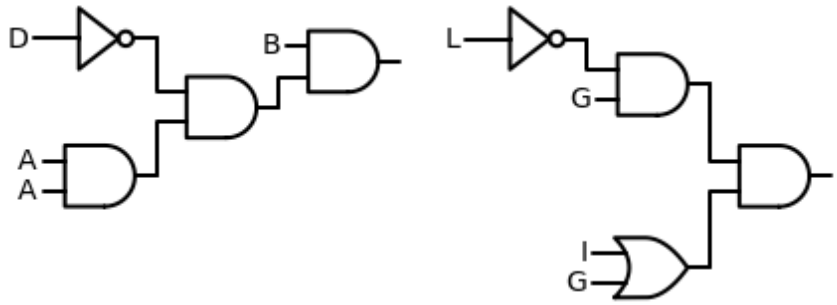
101248202	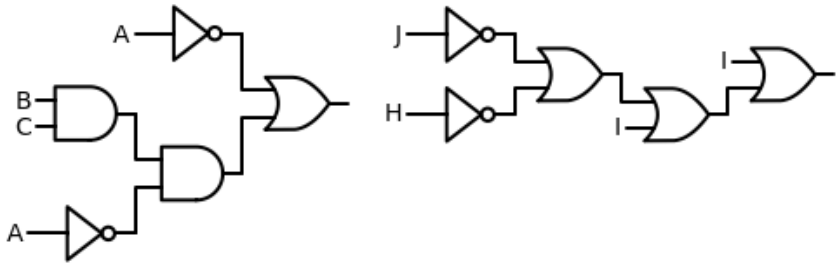
101248242	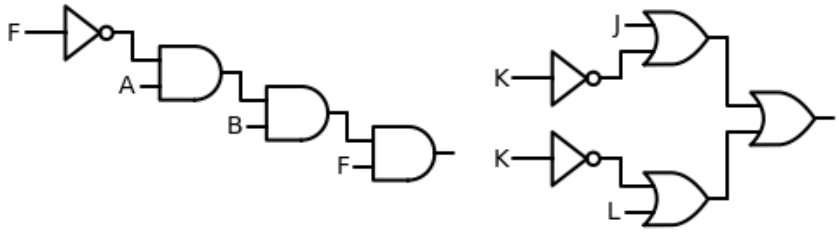
101248245	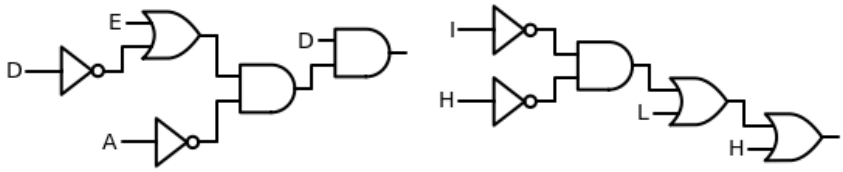
101248420	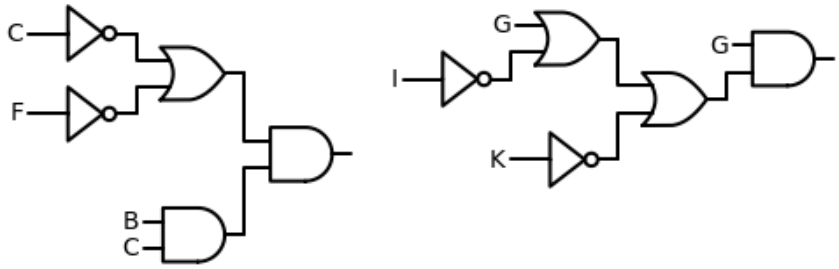

Locate your nine-digit student identification number in the table below and you will see the circuit schematics that have been assigned to you for Assignment 3. If you are unable to locate your student number below, then you must contact your instructor at robert.collier@scs.carleton.ca, ASAP and no later than Wednesday, October 6th by 11:59pm EST.

101248542	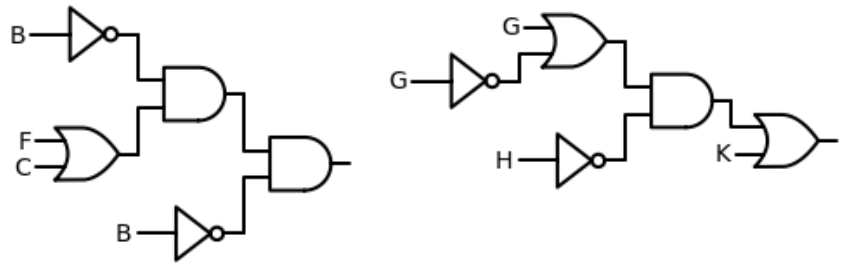
101248581	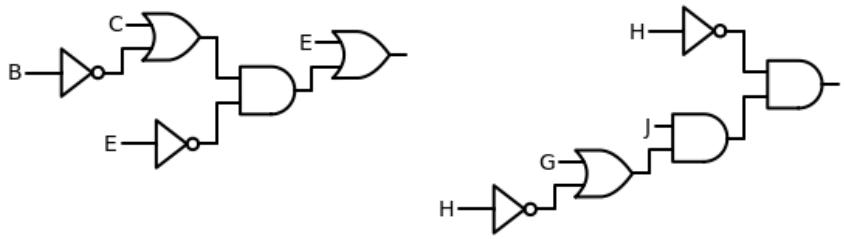
101248639	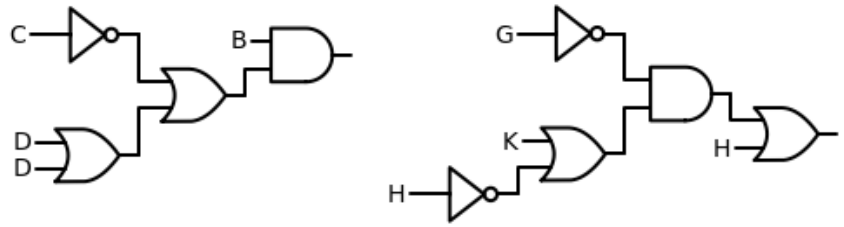
101248655	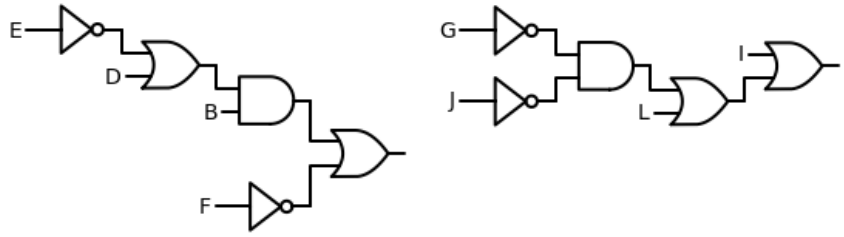
101248739	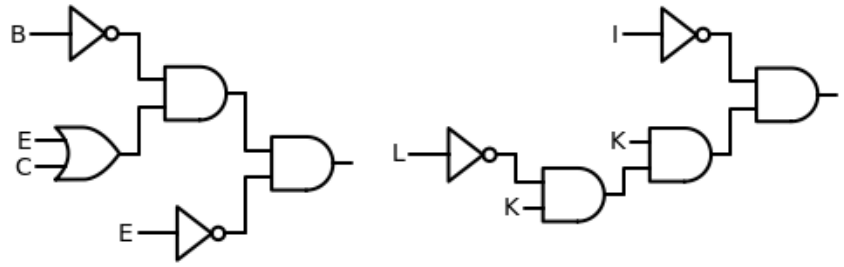

Locate your nine-digit student identification number in the table below and you will see the circuit schematics that have been assigned to you for Assignment 3. If you are unable to locate your student number below, then you must contact your instructor at robert.collier@scs.carleton.ca, ASAP and no later than Wednesday, October 6th by 11:59pm EST.

101248756	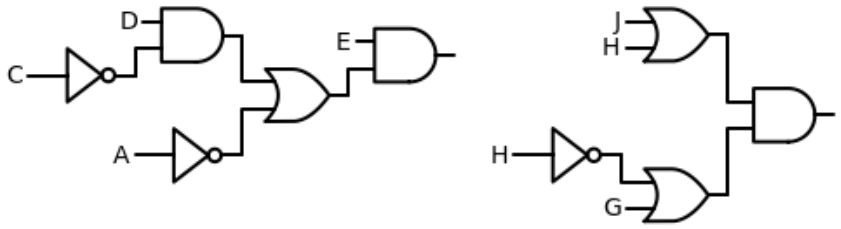
101248900	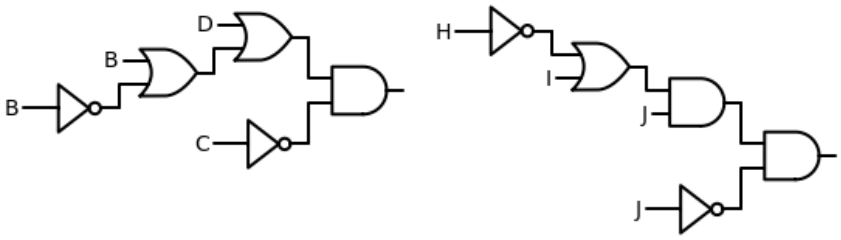
101248951	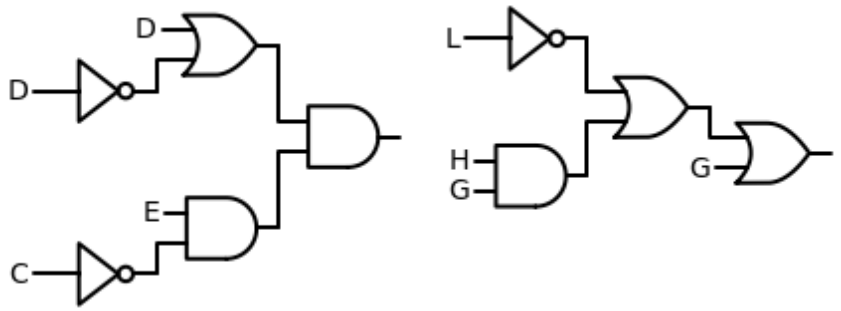
101248964	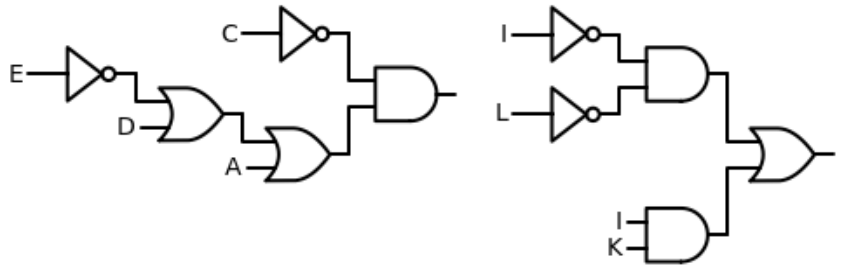

Locate your nine-digit student identification number in the table below and you will see the circuit schematics that have been assigned to you for Assignment 3. If you are unable to locate your student number below, then you must contact your instructor at robert.collier@scs.carleton.ca, ASAP and no later than Wednesday, October 6th by 11:59pm EST.

101249023	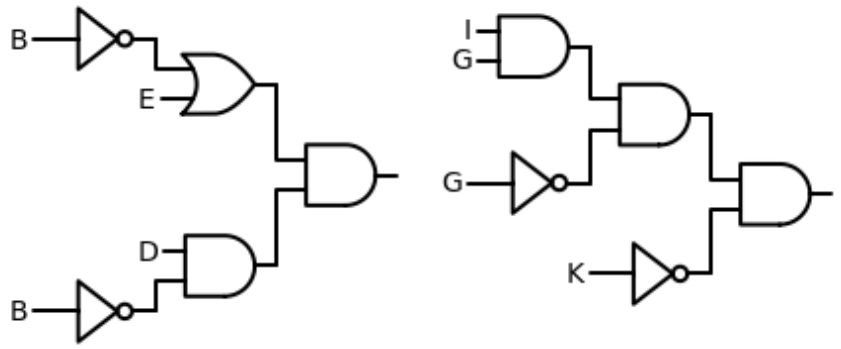
101249181	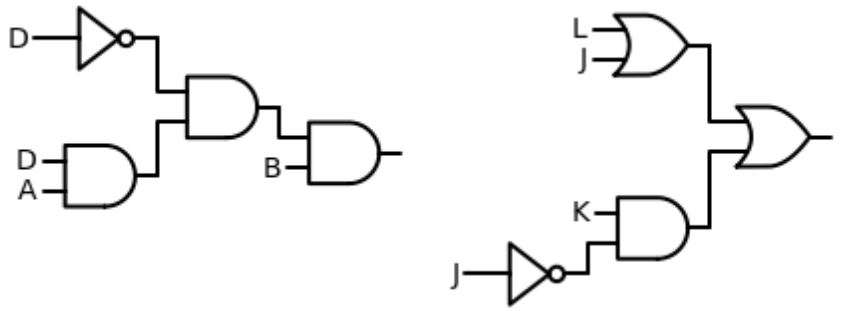
101249183	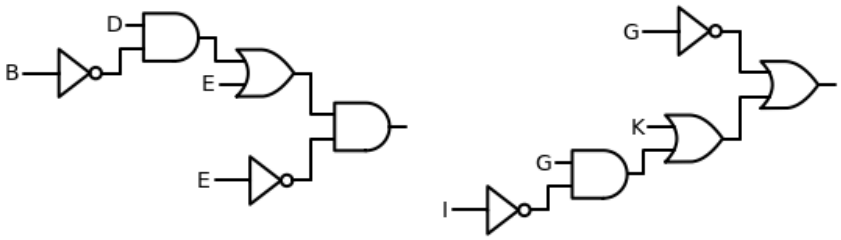
101249267	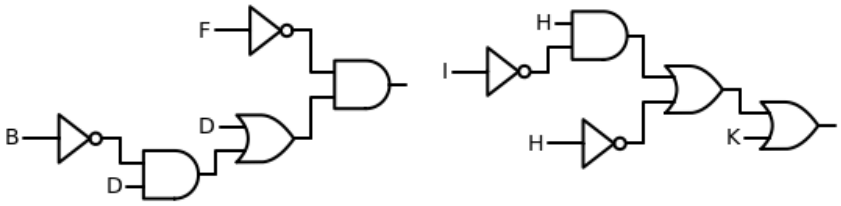

Locate your nine-digit student identification number in the table below and you will see the circuit schematics that have been assigned to you for Assignment 3. If you are unable to locate your student number below, then you must contact your instructor at robert.collier@scs.carleton.ca, ASAP and no later than Wednesday, October 6th by 11:59pm EST.

101249272	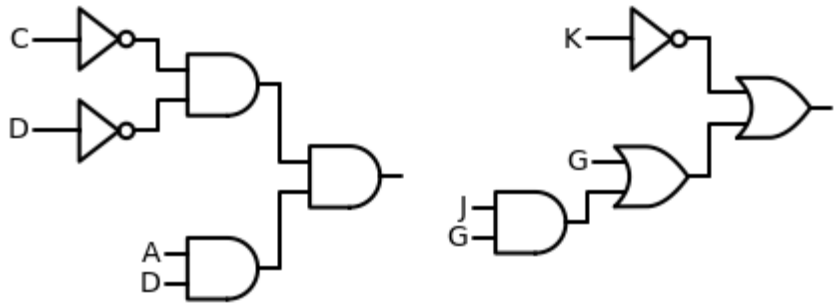
101249276	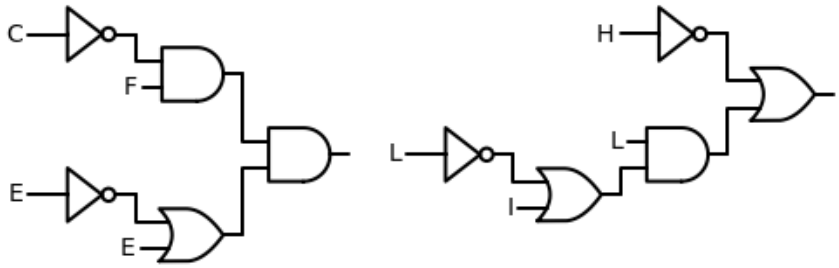
101249435	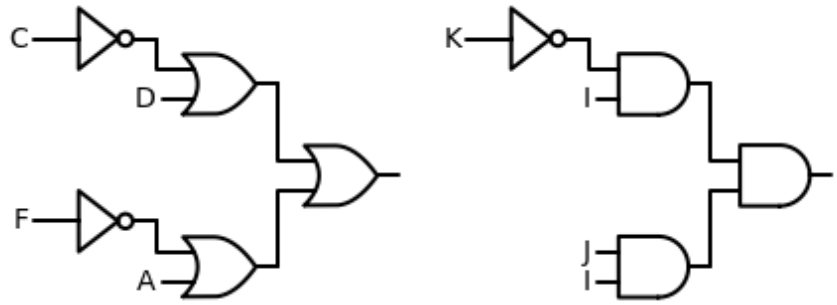
101249754	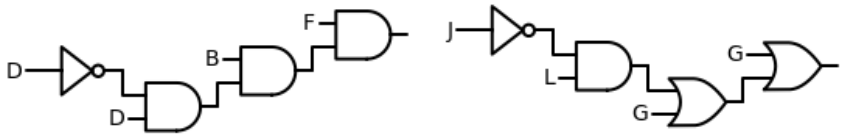
101249935	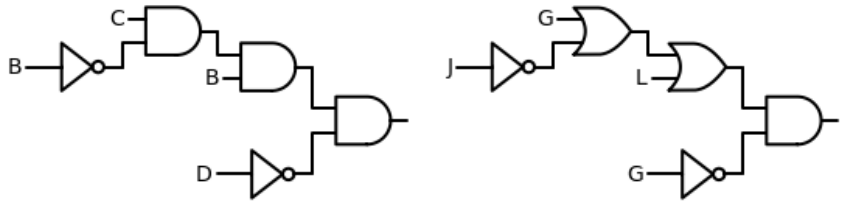

Locate your nine-digit student identification number in the table below and you will see the circuit schematics that have been assigned to you for Assignment 3. If you are unable to locate your student number below, then you must contact your instructor at robert.collier@scs.carleton.ca, ASAP and no later than Wednesday, October 6th by 11:59pm EST.

101250349	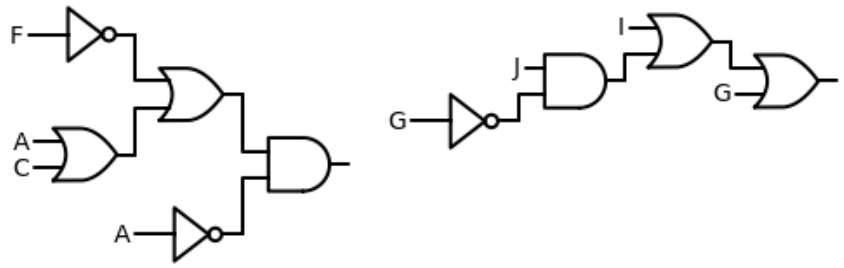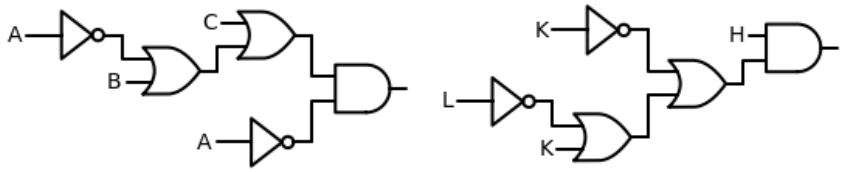
101250445