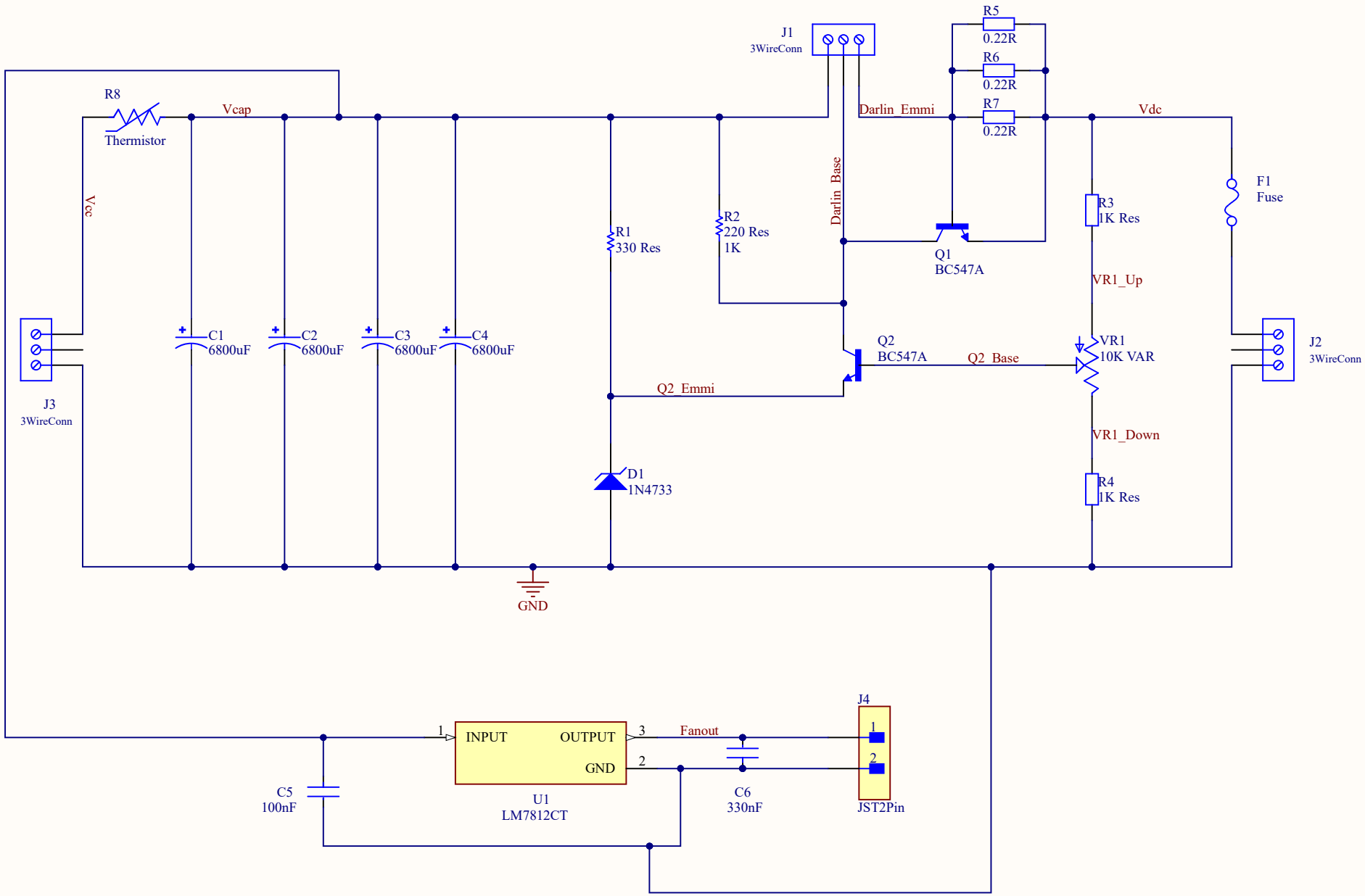

Title	Linear Power Supply	
Size A	Number Group 15	Revision
Date: 4/02/2022		Sheet of
File: C:\Users\..\Schematics_Sheet.SchDoc		Drawn By: Ravidu Munasinghe