QUANTUM ERROR CORRECTION (QEC) — GRADUATE EXAM

Total Points: 50.0 | Questions: 5 | Date: April 16, 2026

Diagram-based questions on Quantum Error Correction (QEC)

Question 1

10.0 points

Analyze the circuit shown below of a stabilizer code. Identify how the syndrome measurement helps in error detection and explain the role of stabilizers in quantum error correction.

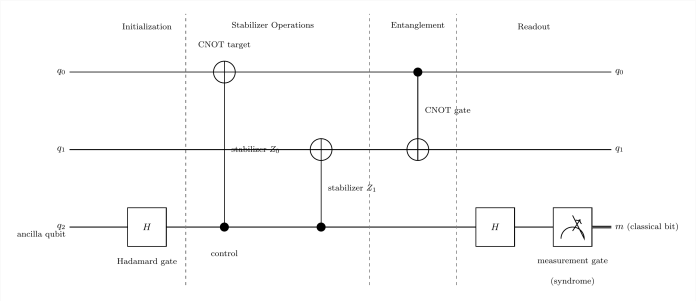

Fig. 1. Quantum circuit for a stabilizer code with horizontal qubit lines labeled q0, q1, q2. Include CNOT gates between qubits to represent stabilizers, H gates for Hadamard operations, and measurement gates to indicate syndrome measurement. Label all components clearly to show their role in the circuit. FORBIDDEN LABELS (do NOT render as text, legend entries, annotations, note boxes, or titles — these reveal the answer): • base editing window • syndrome table • eavesdropping detection • logical qubit encoding path The diagram will FAIL review if any of these appear. IMPORTANT: Values or sequences in the diagram don't match the question. Specifically: data_mismatch. The diagram shows a quantum circuit with five qubit lines (q0, q1, q2, q3, q4), but the diagram description used for generation explicitly requested a circuit with three qubit lines (q0, q1, q2).. Regenerate using EXACTLY the values and sequences specified. IMPORTANT: Values or sequences in the diagram don't match the question. Specifically: The prompt specified a data mismatch where the diagram. The user prompt explicitly states that the diagram to be reviewed will have a data mismatch, specifically showing five qubit lines instead of the requested three, but the provided image incorrectly shows three qubit lines, matching the description instead of the specified error.. Regenerate using EXACTLY the values and sequences specified.

Question 2

10.0 points

Examine the circuit shown below illustrating the 3-qubit bit-flip code with its corresponding error detection circuit. Explain the error correction process and identify the role of each circuit component in detecting a single bit-flip error.

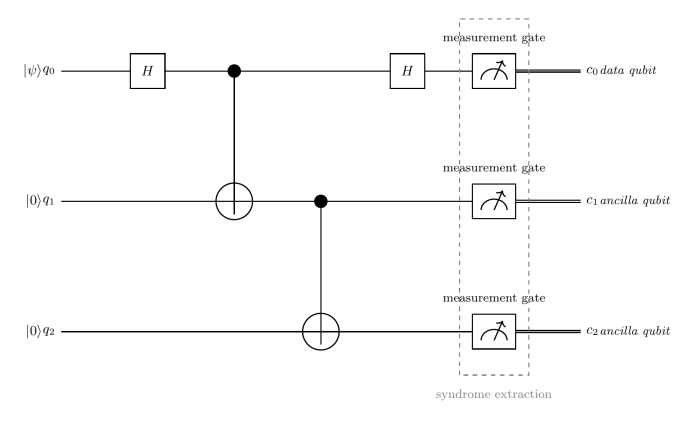

Fig. 2. A 3-qubit bit-flip code circuit with error detection. The circuit includes three qubit lines labeled q0, q1, and q2. Each qubit line has a series of gates: Hadamard (H) gates, CNOT gates between q0 and q1, and q1 and q2, as well as measurement gates at the end of each qubit line. The circuit should illustrate the error detection process for a single bit-flip error, showing how the syndrome is extracted using the measurement gates. The qubit lines should be horizontal, with gates arranged in sequence along the lines, and classical lines connecting the measurement outputs to indicate error detection. FORBIDDEN LABELS (do NOT render as text, legend entries, annotations, note boxes, or titles — these reveal the answer): • CNOT • error correction process • logical operator • eavesdropping detection • logical qubit encoding path The diagram will FAIL review if any of these appear. IMPORTANT: Values or sequences in the diagram don't match the question. Specifically: The diagram shows the second syndrome bit being calculated from qubits q0 and q2, but. The diagram shows an incorrect circuit topology for the syndrome measurement part of the 3-qubit bit-flip code, which contradicts the standard implementation and the user's description.. Regenerate using EXACTLY the values and sequences specified. IMPORTANT: Values or sequences in the diagram don't match the question. Specifically: The CNOT gate topology does not. The diagram shows CNOT gates between (q0, q1) and (q0, q2), but the diagram description explicitly requires CNOT gates between (q0, q1) and (q1, q2).. Regenerate using EXACTLY the values and sequences specified.

Question 3

10.0 points

Examine the surface code lattice in the diagram below. Describe how logical qubits are encoded on the lattice and discuss how the layout is used for error correction.

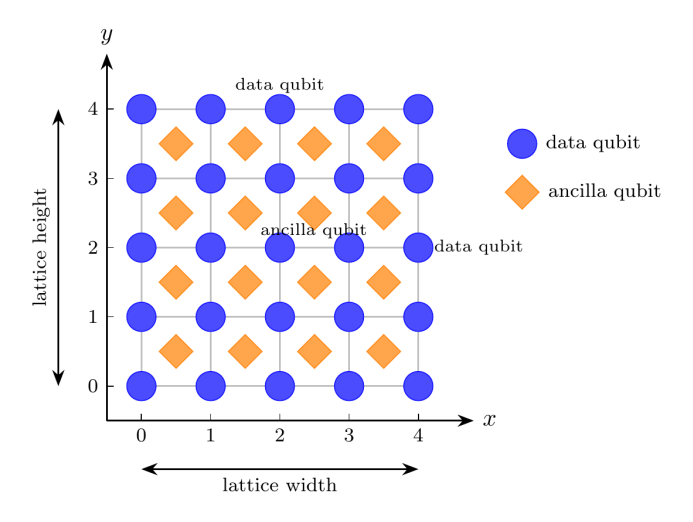

Fig. 3. CUMULATIVE LEAK CORRECTIONS (all must be fixed): Known answer terms to avoid: Logical, logical operator, eavesdropping detection, logical qubit encoding path; The diagram contains the label "Logical Qubit Encoding Region", which reveals a key concept the student is asked to explain and uses the forbidden word "Logical".. A surface code lattice

Question 4

10.0 points

Examine the diagram below that demonstrates fault-tolerant gate teleportation. Explain how teleportation is utilized to achieve fault-tolerance in quantum gates and what protections it provides against errors.

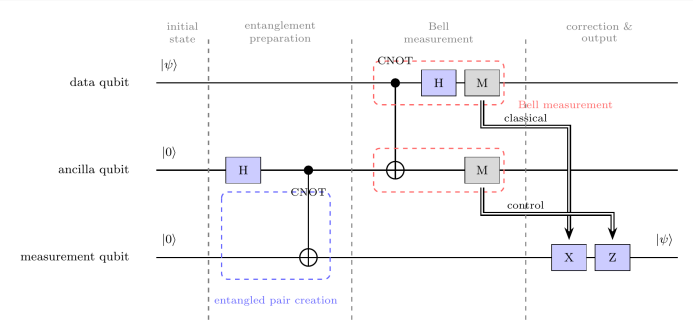

Fig. 4. A quantum circuit diagram demonstrating fault-tolerant gate teleportation. The diagram should include horizontal lines representing qubit wires labeled as 'data qubit', 'ancilla qubit', and 'measurement qubit'. Include quantum gates such as CNOT, Hadamard (H), and measurement gates. Show classical control lines from measurement results to subsequent gates, indicating the teleportation process. Label the gates and qubit lines clearly to illustrate the teleportation and error correction steps. FORBIDDEN LABELS (do NOT render as text, legend entries, annotations, note boxes, or titles — these reveal the answer): • Gate • logical qubit encoding path The diagram will FAIL review if any of these appear.

Question 5 10.0 points

Interpret the threshold theorem in the diagram below, which illustrates error rates in quantum error correction. Explain how the error rate threshold is defined and its significance in achieving fault-tolerant quantum computation.

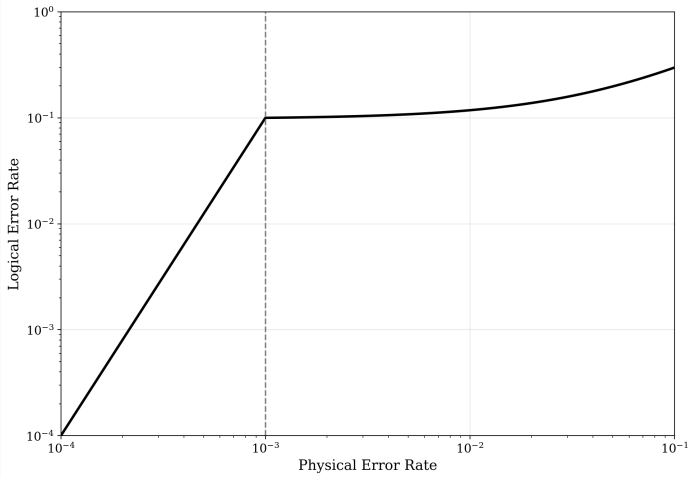

Fig. 5. A plot illustrating the error rate threshold in quantum error correction. The x-axis represents the physical error rate, while the y-axis represents the logical error rate. The plot shows a curve that decreases sharply, indicating the threshold point where the logical error rate becomes significantly lower than the physical error rate, demonstrating the effectiveness of quantum error correction beyond this threshold. FORBIDDEN LABELS (do NOT render as text, legend entries, annotations, note boxes, or titles — these reveal the answer): • logical operator • threshold • logical qubit encoding path • threshold region • critical threshold The diagram will FAIL review if any of these appear. IMPORTANT: Values or sequences in the diagram don't match the question. Specifically: The plot shows a logical error rate that is consistently greater than the physical error rate (e. The diagram incorrectly plots the logical error rate as being higher than the physical error rate for all values, which contradicts the fundamental principle of the quantum error correction threshold theorem it is supposed to illustrate.. Regenerate using EXACTLY the values and sequences specified. IMPORTANT: Values or sequences in the diagram don't match the question. Specifically: The question explicitly states that the diagram to be reviewed incorrectly shows the logical error rate as being consistently greater than the physical error rate. The diagram incorrectly plots the relationship between physical and logical error rates, contradicting the fundamental principle of the quantum error correction threshold theorem it is supposed to illustrate.. Regenerate using EXACTLY the values and sequences specified.