QUANTUM ERROR CORRECTION (QEC) — GRADUATE EXAM

Total Points: 50.0 | Questions: 5 | Date: March 29, 2026

Diagram-based questions on Quantum Error Correction (QEC)

Question 1

10.0 points

Analyze the circuit shown below of a stabilizer code. Identify how the syndrome measurement helps in error detection and explain the role of stabilizers in quantum error correction.

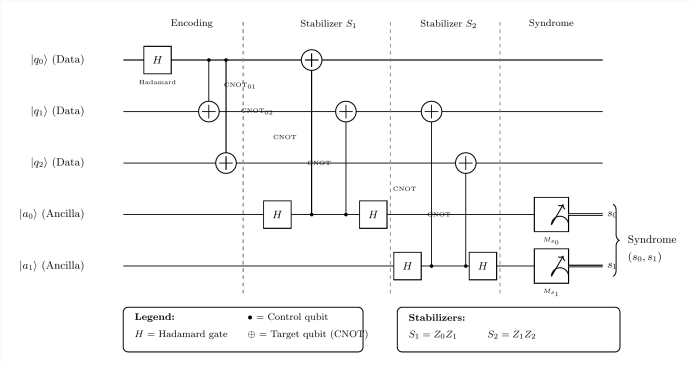

Fig. 1. A quantum circuit for a stabilizer code. Include qubits represented as horizontal lines, with gates such as CNOT, Hadamard, and measurement symbols. Show the stabilizers as specific gate configurations on the qubits, and indicate the syndrome measurement process. Label the qubits and gates to illustrate their roles in error detection and correction. IMPORTANT: The diagram is missing required labels. The diagram is missing required labels for the CNOT. Ensure ALL structural components mentioned in the description are clearly labeled. IMPORTANT correction needed: The diagram includes a "Syndrome Table. Do NOT include region labels (Feasible/Infeasible, Stable/Unstable, Optimal, etc.), formula annotations, reaction product labels, threshold markers, or any text that reveals the answer. Show structure and context only.

Question 2

10.0 points

Examine the circuit shown below illustrating the 3-qubit bit-flip code with its corresponding error detection circuit. Explain the error correction process and identify the role of each circuit component in detecting a single bit-flip error.

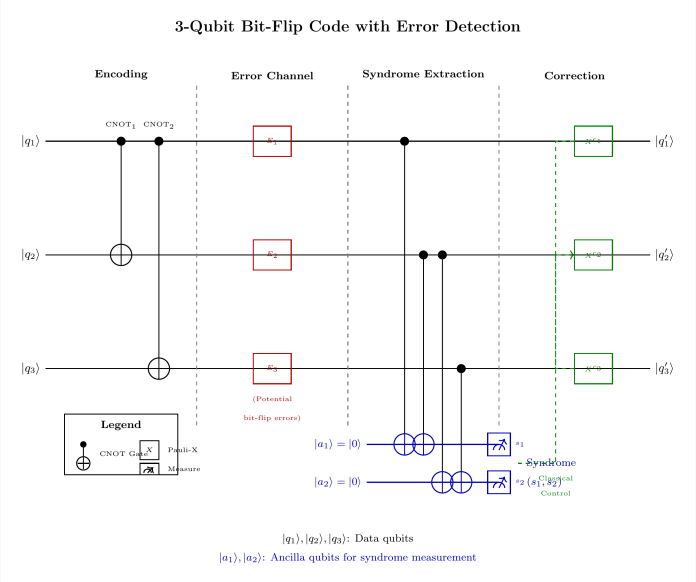

Fig. 2. A 3-qubit bit-flip code circuit with error detection. The circuit consists of three qubits labeled Q1, Q2, and Q3. Each qubit is connected to a series of gates for encoding and error detection. Include XOR gates for error detection, showing connections between the qubits and the gates. Label the input qubits, the error detection gates, and the output qubits. The circuit should illustrate how a single bit-flip error is detected and corrected. IMPORTANT correction needed: The diagram includes a "Syndrome Table" which explicitly. Do NOT include region labels (Feasible/Infeasible, Stable/Unstable, Optimal, etc.), formula annotations, reaction product labels, threshold markers, or any text that reveals the answer. Show structure and context only. IMPORTANT: The diagram is missing required labels. The diagram is missing the required labels for the input. Ensure ALL structural components mentioned in the description are clearly labeled.

Question 3

10.0 points

Examine the surface code lattice in the diagram below. Describe how logical qubits are encoded on the lattice and discuss how the layout is used for error correction.

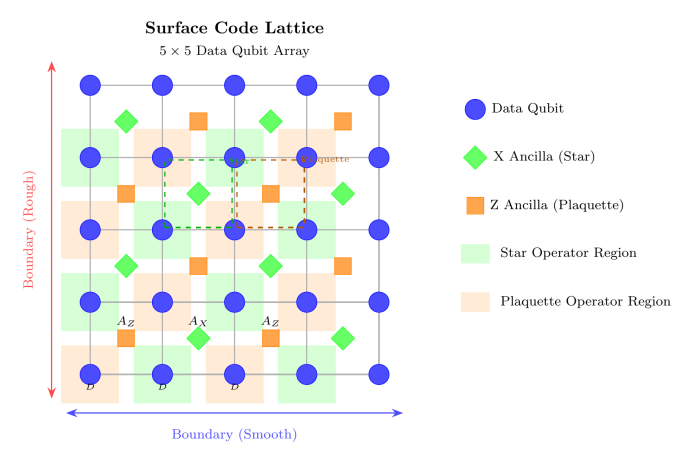

Fig. 3. A surface code lattice diagram showing the arrangement of physical qubits on a 2D grid. The diagram should include data qubits and measurement qubits, with logical qubits indicated by specific paths or regions on the lattice. Highlight the stabilizers used for error correction, such as star and plaquette operators, and show how they interact with the qubits. Label the logical qubits and illustrate how errors can be detected and corrected using the lattice structure. IMPORTANT: The diagram is missing required labels. The diagram description requires. Ensure ALL structural components mentioned in the description are clearly labeled.

Question 4

10.0 points

Examine the diagram below illustrating fault-tolerant gate teleportation. Discuss how teleportation is utilized to achieve fault-tolerance in quantum gates and what protections it offers against errors.

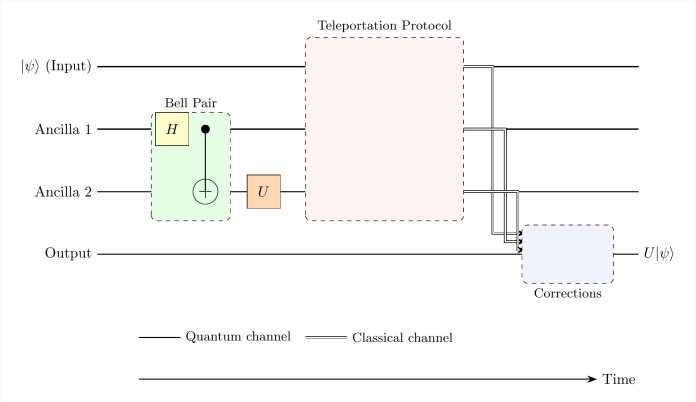

Fig. 4. A diagram illustrating fault-tolerant gate teleportation in quantum computing. Include components such as quantum gates, qubits, and connections demonstrating the teleportation process. Show how teleportation is utilized to achieve fault-tolerance, highlighting protections against errors. Use standard symbols for quantum gates and qubits, and label each component clearly to indicate its role in the teleportation process. IMPORTANT correction needed: The diagram contains a label "Protected gate. Do NOT include region labels (Feasible/Infeasible, Stable/Unstable, Optimal, etc.), formula annotations, reaction product labels, threshold markers, or any text that reveals the answer. Show structure and context only.

Question 5 10.0 points

Interpret the threshold theorem in the diagram below, which illustrates error rates in quantum error correction. Explain how the error rate threshold is defined and its significance in achieving fault-tolerant quantum computation.

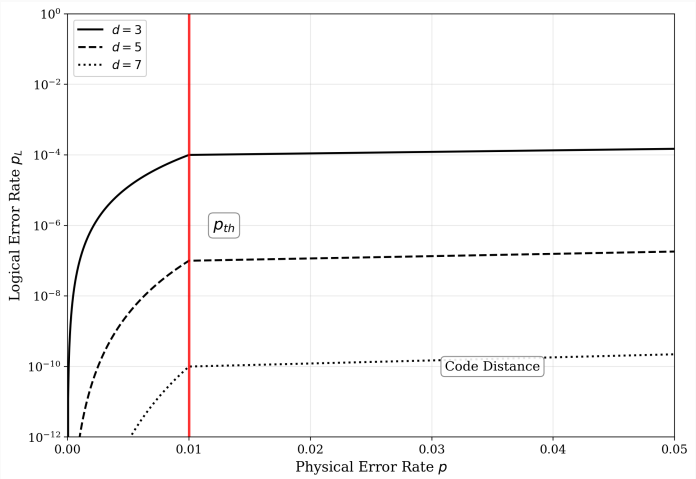

Fig. 5. CRITICAL: The previous diagram showed the wrong type. The diagram shows a plot of ". Regenerate from scratch showing the CORRECT diagram type. A plot illustrating the error rate threshold in quantum error correction. The x-axis represents the error rate, and the y-axis represents the logical error rate. The plot includes a threshold line that separates the region where fault-tolerant quantum computation is possible from the region where it is not. The threshold line is marked, and the regions above and below it are labeled accordingly. IMPORTANT: The diagram is missing required labels. The diagram description explicitly requires labels for the regions where fault. Ensure ALL structural components mentioned in the description are clearly labeled.