QUANTUM ERROR CORRECTION (QEC) — GRADUATE EXAM

Total Points: 50.0 | Questions: 5 | Date: April 15, 2026

Diagram-based questions on Quantum Error Correction (QEC)

Question 1

10.0 points

Examine the circuit shown below of a stabilizer code. Identify how the syndrome measurement aids in error detection and explain the role of stabilizers in quantum error correction.

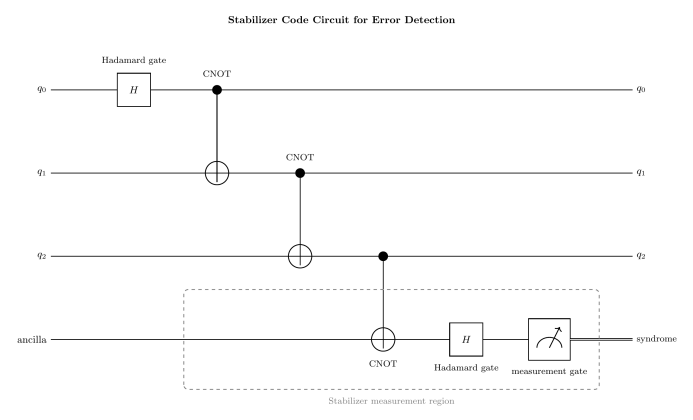

Fig. 1. A quantum circuit for a stabilizer code. The circuit includes horizontal qubit lines labeled q0, q1, q2, and ancilla. Each qubit line has CNOT gates connecting q0 to q1, q1 to q2, and q2 to ancilla. There are Hadamard gates on q0 and ancilla. Measurement gates are at the end of the ancilla line. The circuit demonstrates how stabilizer measurements are performed for error detection in quantum error correction. IMPORTANT: Values or sequences in the diagram don't match the question. Specifically: The DIAGRAM DESCRIPTION requires CNOT gates connecting q0 to q1, q1 to q2, and q2 to ancilla, but the diagram shows. The diagram shows a quantum circuit whose gate connections and qubit labels do not match the specifications in the DIAGRAM DESCRIPTION.. Regenerate using EXACTLY the values and sequences specified. IMPORTANT: Values or sequences in the diagram don't match the question. Specifically: data_mismatch. The diagram shows CNOT gates with controls on q0, q1, and q2, but the DIAGRAM DESCRIPTION explicitly states that the diagram does not match the required connections and must be regenerated.. Regenerate using EXACTLY the values and sequences specified.

Question 2

10.0 points

Examine the circuit shown below illustrating the 3-qubit bit-flip code with its corresponding error detection circuit. Explain the error correction process and identify the role of each circuit component in detecting a single bit-flip error.

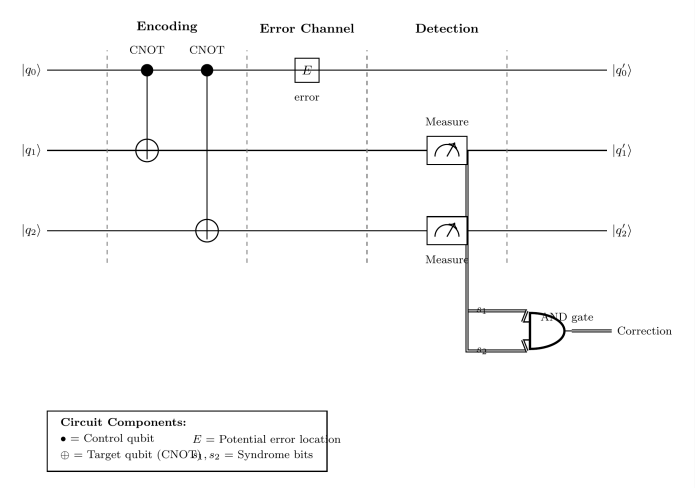

Fig. 2. A 3-qubit bit-flip code circuit with error detection. Show three horizontal qubit lines labeled q0, q1, q2. Include CNOT gates connecting q0 to q1 and q0 to q2 for encoding. Add measurement gates on q1 and q2 for error detection, with classical lines leading to an AND gate for error correction. Label all qubit lines and gates clearly. IMPORTANT correction needed: The diagram's legend reveals a key part of the answer by explaining how to interpret the measurement syndrome, which the student is supposed to derive as part of their explanation.. Specifically: The legend contains the text "Syndrome: s_1s_2 = 11 indicates error on q. Do NOT include region labels (Feasible/ Infeasible, Stable/Unstable, Optimal, etc.), formula annotations, reaction product labels, threshold markers, or any text that reveals the answer. Show structure and context only. IMPORTANT: The diagram is missing required labels. Specifically: The diagram shows a "Syndrome Decoder" block, but the generation instructions required an "AND gate". CORRECTED_. The diagram description explicitly requested an "AND gate" for the classical error correction logic, but the diagram shows a generic "Syndrome Decoder" block instead.. Add each missing label as visible text at the appropriate location in the diagram.

Question 3

10.0 points

Examine the surface code lattice in the diagram below. Describe how logical qubits are encoded on the lattice and discuss how the layout is used for error correction.

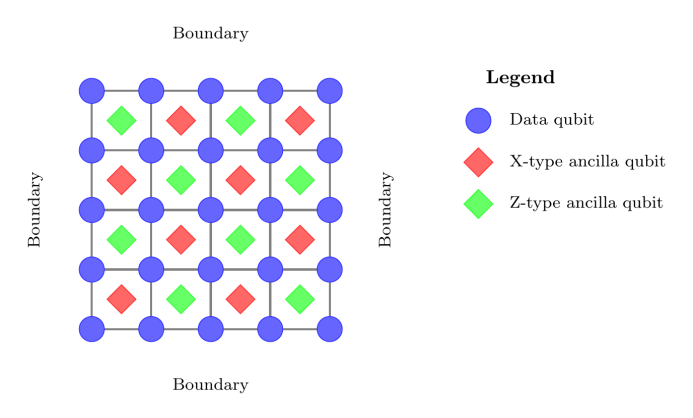

Fig. 3. A surface code lattice diagram showing a 5x5 grid of data qubits (blue circles) connected by gray lines. In the center of each 2x2 square of data qubits, place an ancilla qubit. The ancilla qubits should alternate in a checkerboard pattern between X-type ancilla qubits (red diamonds) and Z-type ancilla qubits (green diamonds). Include a legend to the right of the lattice that clearly identifies the symbols for 'Data qubit', 'X-type ancilla qubit', and 'Z-type ancilla qubit'. Label the two axes of the grid as 'Boundary'. Do not add any other annotations or labels directly on the lattice grid.

Question 4

10.0 points

Examine the diagram below illustrating fault-tolerant gate teleportation. Describe how teleportation is utilized to achieve fault-tolerance in quantum gates and what protections it offers against errors.

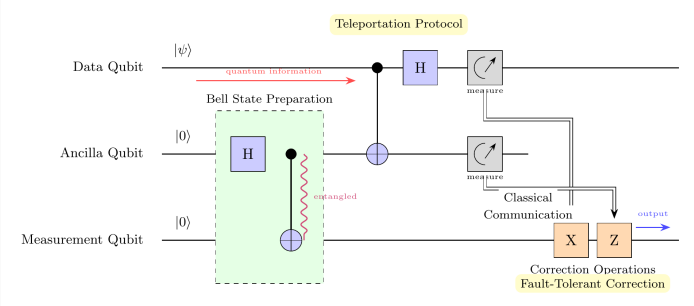

Fig. 4. A quantum circuit diagram illustrating fault-tolerant gate teleportation. The diagram should include: - Three horizontal lines representing qubits: the first line for the data qubit, the second for the ancilla qubit, and the third for the measurement qubit. - A Hadamard gate (H) on the ancilla qubit line. - A CNOT gate with the data qubit as control and the ancilla qubit as target. - A measurement operation on the ancilla qubit line, with a classical line indicating the measurement result. - A correction operation (X or Z gate) on the data qubit line, controlled by the measurement result. - Labels for each qubit line: 'Data Qubit', 'Ancilla Qubit', and 'Measurement Qubit'. - Arrows indicating the flow of information and corrections applied based on measurement outcomes. This diagram illustrates how teleportation is used to achieve fault-tolerance by correcting errors based on measurement outcomes. IMPORTANT: Values or sequences in the diagram don't match the question. Specifically: The diagram description requires a specific gate-level circuit (Hadamard, CNOT, single-. The diagram shows a high-level conceptual diagram of a gate teleportation protocol, but it does not match the specific gate-level components and qubit roles required by the diagram description.. Regenerate using EXACTLY the values and sequences specified.

Question 5

10.0 points

Interpret the threshold theorem in the diagram below, which illustrates error rates in quantum error correction. Explain how the error rate threshold is defined and its significance in achieving fault-tolerant quantum computation.

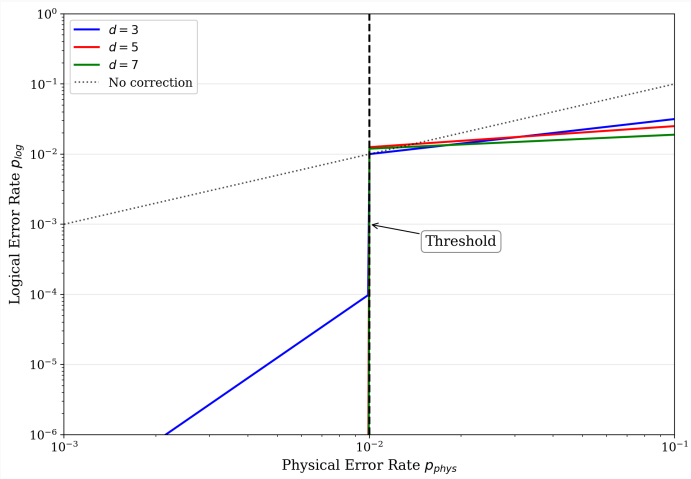

Fig. 5. CRITICAL: The previous diagram showed the wrong type. The diagram shows a plot of "Error Rate" vs. "Number of Quantum Operations", which is fundamentally different from the required plot of "Logical Error Rate" vs. "Physical Error Rate" needed to illustrate the threshold theorem.. Specifically: The x-axis is labeled "Number of Quantum. Regenerate from scratch showing the CORRECT diagram type. A plot showing the error rate threshold for quantum error correction. The x-axis represents the physical error rate, and the y-axis represents the logical error rate. The plot includes a threshold line indicating the boundary between regions where error correction is effective (below the threshold) and ineffective (above the threshold).