STELLAR NUCLEOSYNTHESIS — GRADUATE EXAM

Total Points: 50.0 | Questions: 5 | Date: March 29, 2026

Diagram-based questions on Stellar Nucleosynthesis

Question 1

10.0 points

Examine the proton-proton (p-p) chain reaction illustrated in the diagram below for main sequence stars. Identify and explain the sequence of nuclear reactions occurring in the p-p chain, including the role of neutrinos and gamma rays in energy transport within the star.

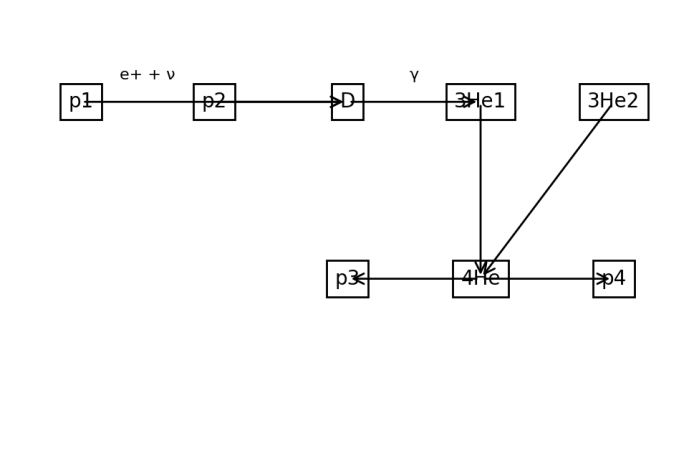

Fig. 1. Diagram for Question 1

Question 2

10.0 points

Examine the CNO cycle reaction network in the diagram below for massive stars. Describe how this cycle contributes to the stellar nucleosynthesis process and compare its efficiency to the proton-proton chain in terms of energy production.

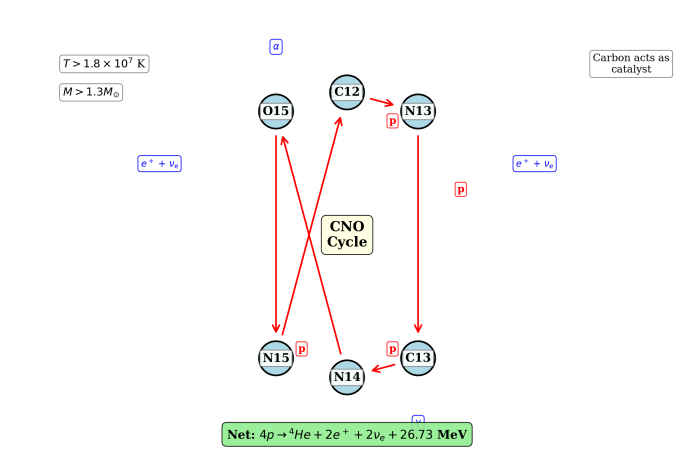

Fig. 2. Diagram for Question 2

Question 3

10.0 points

Interpret the Hertzsprung-Russell (H-R) diagram with evolutionary tracks shown in the diagram below. Explain how the diagram represents the life cycles of different mass stars and identify the key stages for a one-solar-mass star.

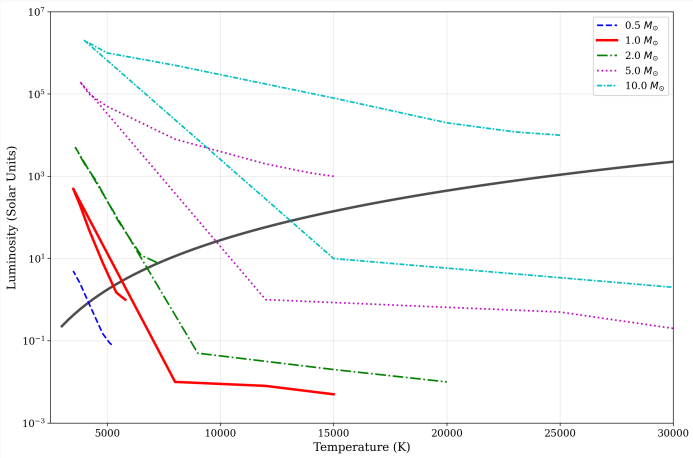

Fig. 3. Diagram for Question 3

Question 4

10.0 points

Analyze the binding energy per nucleon curve shown in the diagram below, focusing on the iron peak. Discuss how this curve illustrates the energy production limits in stellar fusion and why iron signifies an endpoint for nucleosynthesis in stars.

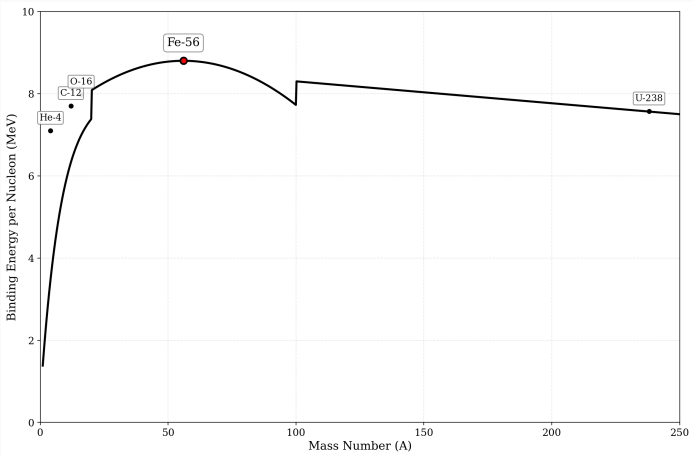

Fig. 4. Diagram for Question 4

Question 5 10.0 points

Examine the onion-shell model diagram of a pre-supernova massive star's internal structure shown below. Describe the different shells and their associated nuclear processes, explaining how this structure leads to a supernova event.

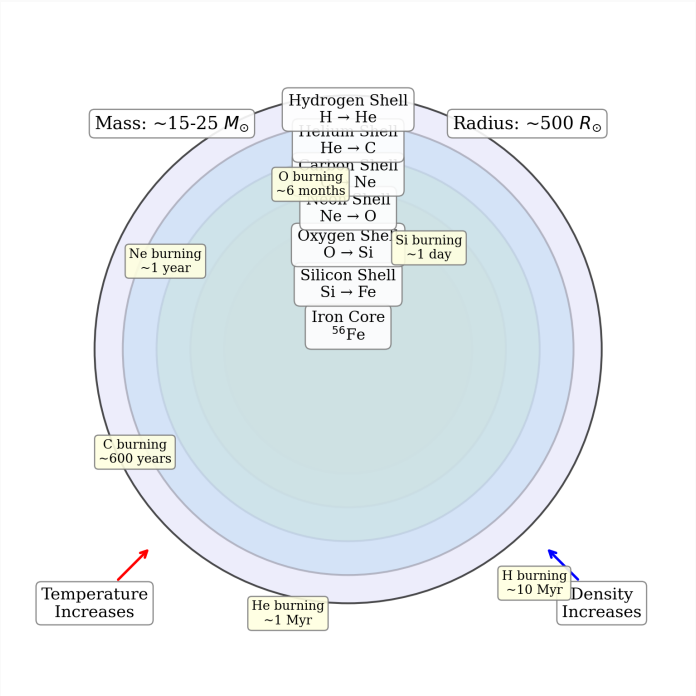

Fig. 5. Diagram for Question 5