QUANTUM CRYPTOGRAPHY (BB84 PROTOCOL) — GRADUATE EXAM

Total Points: 50.0 | Questions: 5 | Date: March 29, 2026

Diagram-based questions on Quantum Cryptography (BB84 Protocol)

Question 1 10.0 points

Examine the Bloch sphere representation of the BB84 protocol quantum states in the diagram below. Describe the position of each of the four states ($|0\rangle$, $|1\rangle$, $|+\rangle$, $|-\rangle$) in terms of their polar and azimuthal angles on the Bloch sphere using rectilinear and diagonal bases.

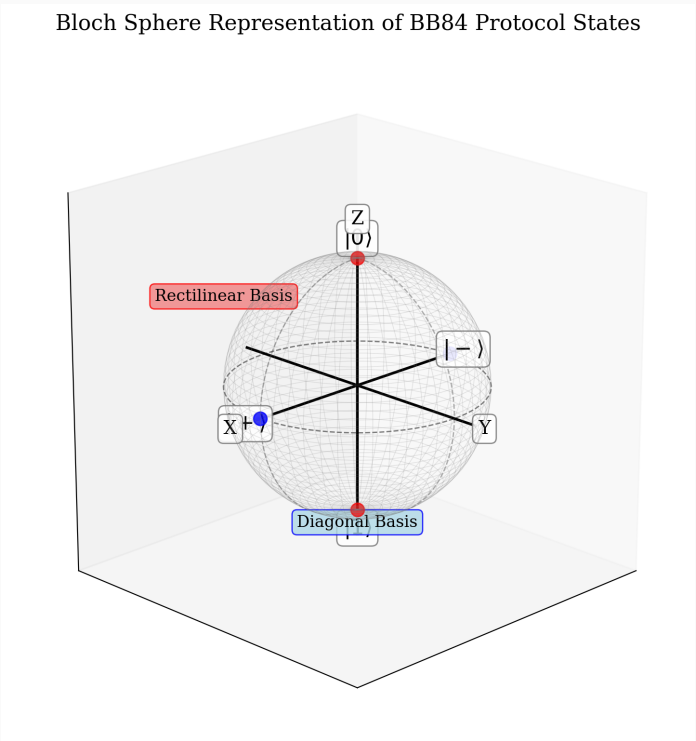

Fig. 1. Diagram for Question 1

Question 2

10.0 points

Interpret the key exchange sequence in the diagram below for the BB84 protocol between Alice and Bob, including an intercept-resend attack by Eve. Explain how the protocol detects eavesdropping.

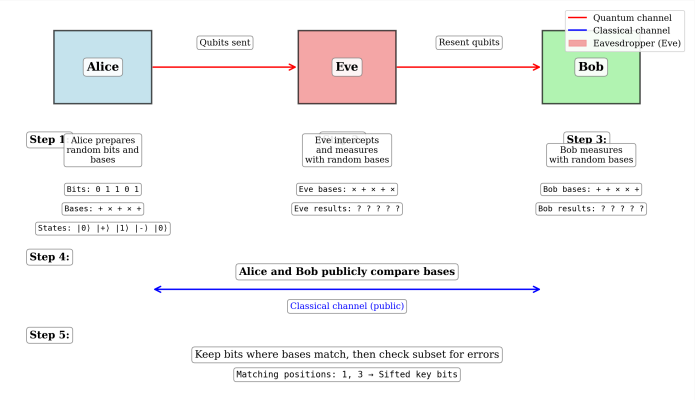

Fig. 2. Diagram for Question 2

Question 3

10.0 points

Examine the quantum key distribution channel in the diagram below, which illustrates the probability of eavesdropping detection versus sifted key error rate. Discuss the trade-off between security and error rate.

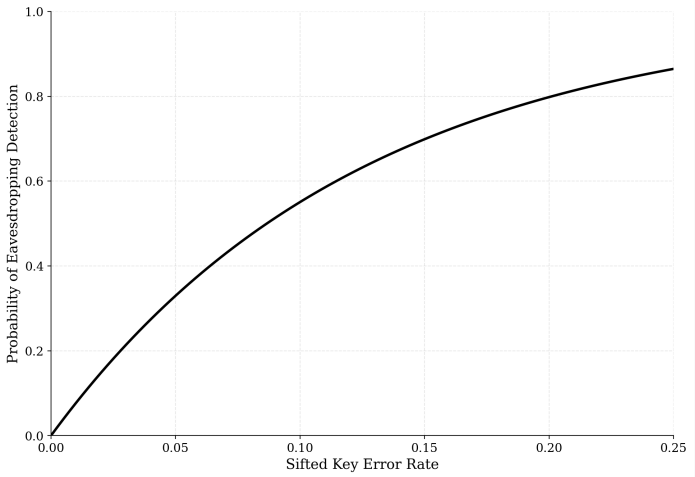

Fig. 3. Diagram for Question 3

Question 4

10.0 points

Evaluate the quantum circuit shown in the diagram below, which demonstrates the no-cloning theorem. Explain how this circuit prevents the cloning of an arbitrary quantum state.

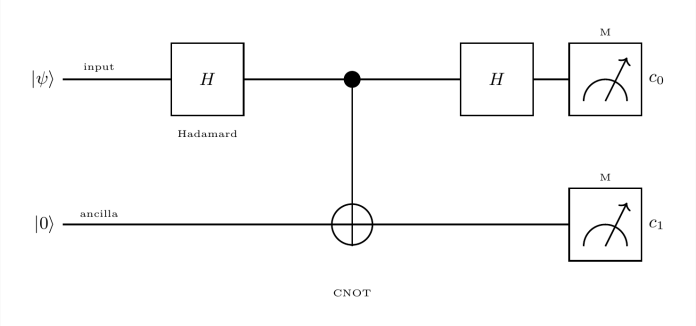

Fig. 4. Diagram for Question 4

Question 5

10.0 points

Examine the correlation curve between sifted key error rate and eavesdropping probability in the quantum key distribution session shown in the diagram below. How can this curve guide secure communication practices?

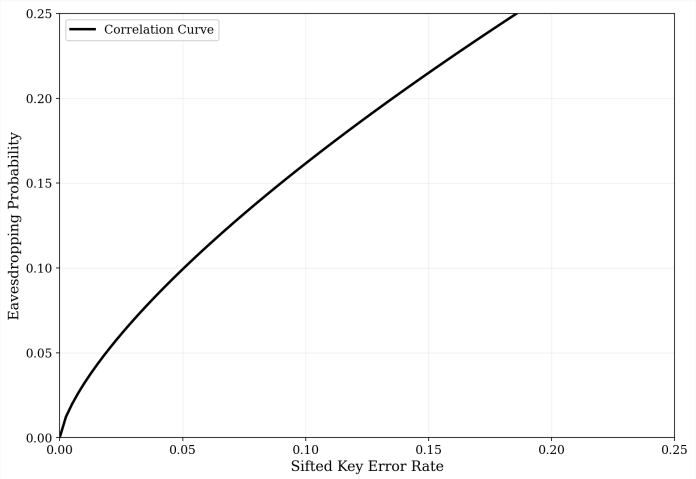

Fig. 5. Diagram for Question 5