NEUROMORPHIC COMPUTING — GRADUATE EXAM

Total Points: None | Questions: 5 | Date: April 17, 2026

Diagram-based questions on Neuromorphic Computing

Question 1

10.0 points

Analyze the diagram below of a leaky integrate-and-fire (LIF) neuron model that includes a plot of the membrane potential over time. Describe the key phases of the potential change, identify the threshold crossing, and explain the impact of the leak current on neuron firing.

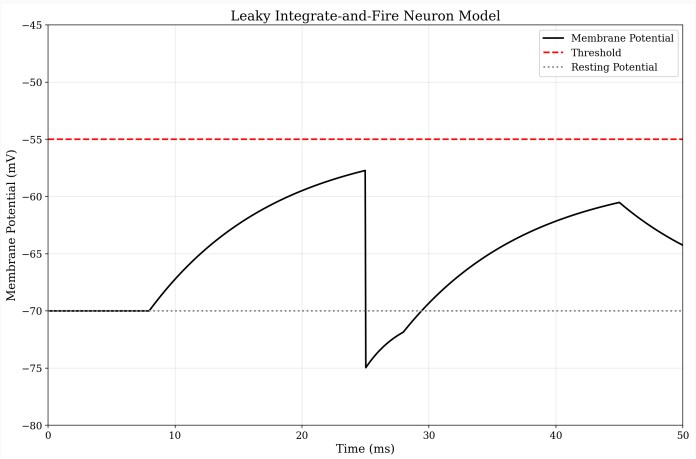

Fig. 1. CUMULATIVE LEAK CORRECTIONS (all must be fixed): Known answer terms to avoid: threshold; The diagram explicitly labels the "Threshold" in the legend, which is a forbidden label and directly answers the part of the question asking the student to identify the threshold crossing.; The diagram explicitly labels the "Threshold" in the legend, which directly answers a part of the question asking the student to identify the threshold crossing.. A 2D plot titled 'Leaky Integrate-and-Fire Neuron Model'. The x-axis is labeled 'Time (ms)' and the y-axis is labeled 'Membrane Potential (mV)'. The plot must show the membrane potential trace (solid black line), a dotted line for the resting potential, and a dashed red line for the threshold level. The legend should include entries for 'Membrane Potential' and 'Rest

Question 2

10.0 points

Examine the diagram below of the spike-timing dependent plasticity (STDP) learning rule. Discuss how the timing difference between presynaptic and postsynaptic spikes affects synaptic weight changes.

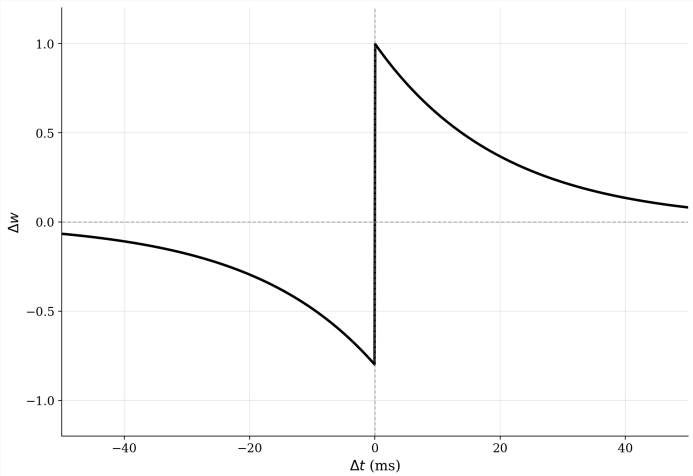

Fig. 2. STDP learning rule graph showing synaptic weight change versus timing difference between presynaptic and postsynaptic spikes. The x-axis represents the timing difference (Δt) in milliseconds, with negative values indicating presynaptic spikes occurring before postsynaptic spikes, and positive values indicating the opposite. The y-axis represents the change in synaptic weight, with positive values indicating potentiation and negative values indicating depression. The curve typically shows a sharp increase in weight for small negative Δt and a decrease for small positive Δt, illustrating the timing-dependent nature of synaptic plasticity. FORBIDDEN LABELS (do NOT render as text, legend entries, annotations, note boxes, or titles — these reveal the answer): • depression • potentiation The diagram will FAIL review if any of these appear.

Question 3

10.0 points

Review the diagram below of a crossbar array architecture for synaptic weights. Explain how synaptic pruning can occur through this architecture and its potential benefits for spiking neural networks.

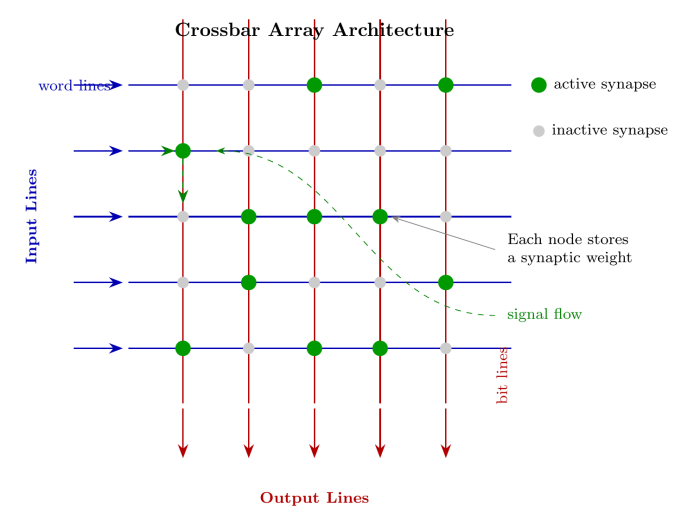

Fig. 3. Crossbar array architecture for synaptic weights. The diagram should show a grid of horizontal and vertical lines representing the crossbar structure. Each intersection point represents a synapse, which can be selectively connected or disconnected to simulate synaptic pruning. Label the horizontal lines as 'Input Lines' and the vertical lines as 'Output Lines'. Highlight a few intersections to indicate active synapses. Include arrows showing the flow of signals from input to output lines. This setup will help explain how synaptic pruning can occur in the architecture. FORBIDDEN LABELS (do NOT render as text, legend entries, annotations, note boxes, or titles — these reveal the answer): • threshold The diagram will FAIL review if any of these appear. IMPORTANT: The diagram is missing required labels. Specifically: Missing label: 'Input Lines', Missing label: 'Output Lines' CORRECTED. The diagram uses the labels "Input Neurons" and "Output Neurons" instead of the required labels "Input Lines" and "Output Lines" as specified in the diagram description.. Add each missing label as visible text at the appropriate location in the diagram. Ensure ALL labels are fully visible and not clipped by diagram boundaries. Use smaller font or reposition labels near edges if needed.

Question 4

10.0 points

Evaluate the effectiveness of the temporal coding scheme in a spiking neural network as depicted in the diagram below. Discuss how this coding scheme can enhance information encoding compared to rate coding.

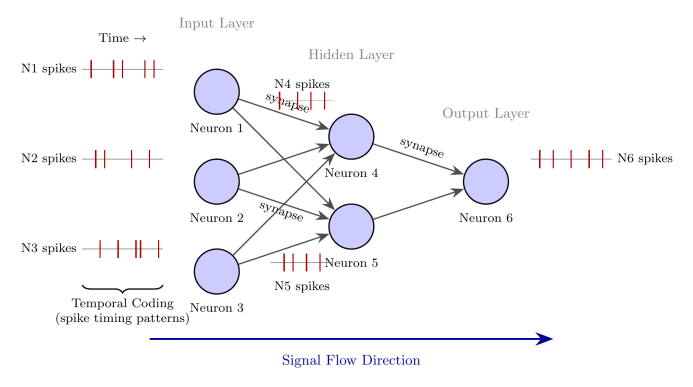

Fig. 4. A diagram showing a spiking neural network with temporal coding

Question 5 10.0 points

Analyze the energy consumption trade-offs between von Neumann and neuromorphic architectures, as illustrated in the diagram below. Discuss why neuromorphic architectures are more energy-efficient, particularly for tasks involving high parallelism.

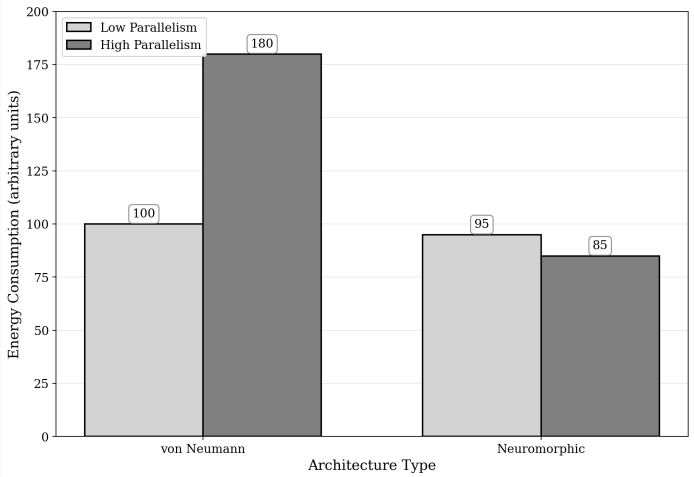

Fig. 5. CUMULATIVE LEAK CORRECTIONS (all must be fixed): Known answer terms to avoid: von neumann architecture; The diagram includes the label "von Neumann", which is a variant of the forbidden term "von neumann architecture". According to the review guidelines, the presence of a forbidden label is an automatic failure.; The diagram includes the label "von Neumann", which is a variant of the forbidden term "von neumann architecture" and is explicitly disallowed by the review guidelines.. CUMULATIVE LEAK CORRECTIONS (all must be fixed): Known answer terms to avoid: von neumann architecture; The diagram includes the label "von Neumann", which is a variant of the forbidden term "von neumann architecture". According to the review guidelines, the presence of a forbidden label is an automatic failure.. Comparison chart showing energy consumption of von Neumann vs neuromorphic architectures. The chart should have two bars for each architecture, representing energy consumption for general tasks and tasks with high parallelism. Label the bars accordingly and include a legend to distinguish between the two architectures. FORBIDDEN LABELS (do NOT render as text, legend entries, annotations, note boxes, or titles — these reveal the answer): • von neumann architecture The diagram will FAIL review if any of these appear. IMPORTANT correction needed: The diagram includes the label "von Neumann", which is a variant of the forbidden term "von neumann architecture". According to the review guidelines, the presence of a forbidden label is an automatic failure.. Specifically: The label "von Neumann" appears on the x-axis, which. Do NOT include region labels (Feasible/Infeasible, Stable/Unstable, Optimal, etc.), formula annotations, reaction product labels, threshold markers, or any text that reveals the answer. Show structure and context only. IMPORTANT correction needed: The diagram includes the label "von Neumann", which is a variant of the forbidden term "von neumann architecture" and is explicitly disallowed by the review guidelines.. Specifically: The label "von Neumann" appears on the x-axis, but this term is on the forbidden list. COR. Do NOT include region labels (Feasible/Infeasible, Stable/Unstable, Optimal, etc.), formula annotations, reaction product labels, threshold markers, or any text that reveals the answer. Show structure and context only.