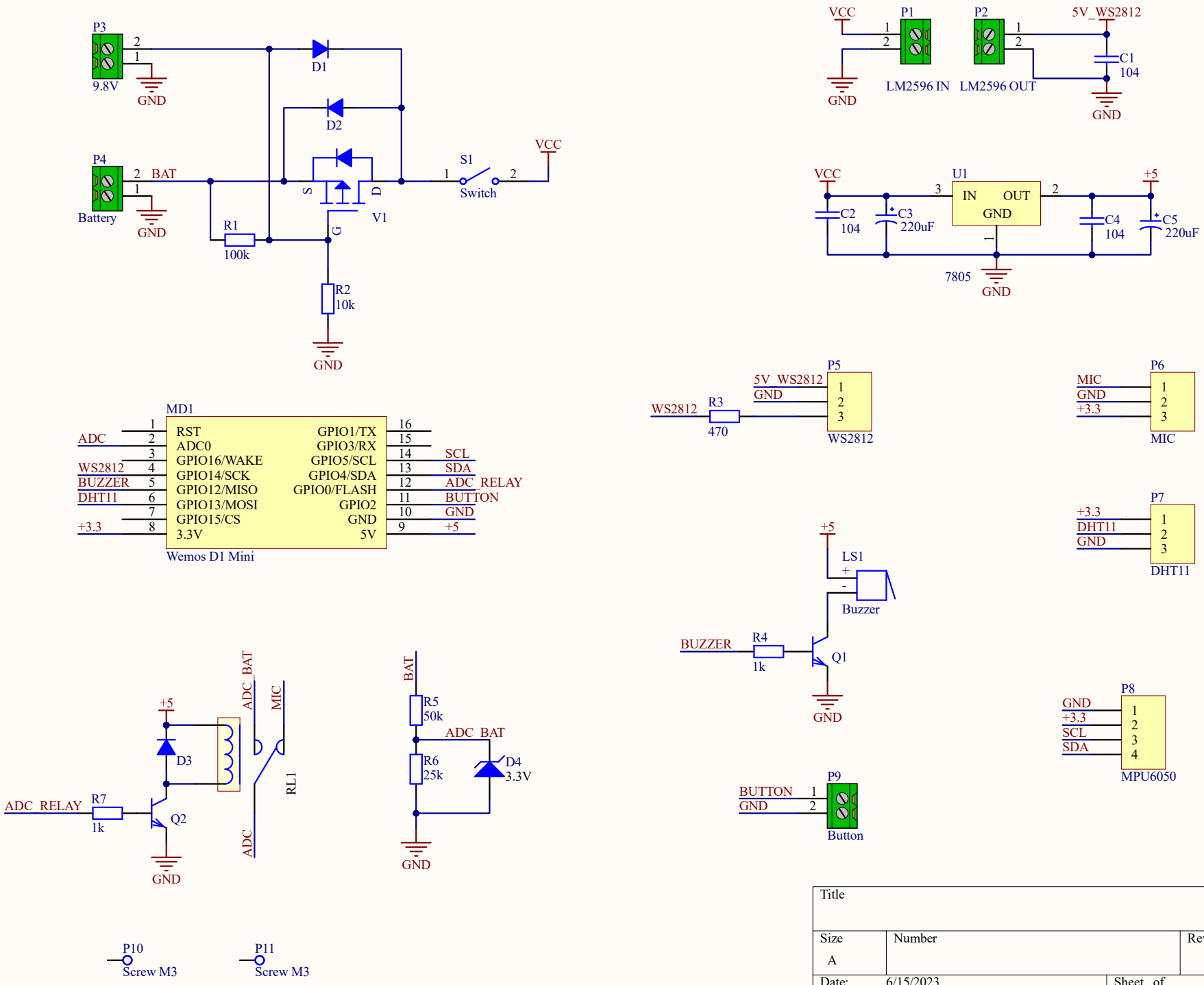
P3
9.8V
GND
D1
D2
P4
BAT
Battery
GND
R1
100k
V1
S1
Switch
VCC
R2
10k
GND
VCC
P1
LM2596 IN
GND
P2
LM2596 OUT
5V_WS2812
C1
104
GND
VCC
U1
IN
OUT
GND
C2
104
C3
220uF
C4
104
C5
220uF
+5
7805
GND
MD1
RST
ADC0
GPIO16/WAKE
GPIO14/SCK
GPIO12/MISO
GPIO13/MOSI
GPIO15/CS
3.3V
GPIO1/TX
GPIO3/RX
GPIO5/SCL
GPIO4/SDA
GPIO0/FLASH
GPIO2
GND
5V
ADC
WS2812
BUZZER
DHT11
+3.3
SCL
SDA
ADC_RELAY
BUTTON
GND
+5
Wemos D1 Mini
WS2812
R3
470
5V_WS2812
GND
P5
WS2812
MIC
GND
+3.3
P6
MIC
+3.3
DHT11
GND
P7
DHT11
+5
LS1
Buzzer
BUZZER
R4
1k
Q1
GND
GND
+3.3
SCL
SDA
P8
MPU6050
BUTTON
GND
P9
Button
+5
D3
ADC_BAT
MIC
RL1
ADC
ADC_RELAY
R7
1k
Q2
GND
BAT
R5
50k
ADC_BAT
R6
25k
D4
3.3V
GND
P10
Screw M3
P11
Screw M3
Title
Size
A
Number
Revision
Date:
6/15/2023
Sheet of
File:
C:\Users\..\Sheet1.SchDoc
Drawn By: